SUBSTRUCTURE

(SUB)

SUBSTRUCTURE

DRAINAGE

(SUB-DR)

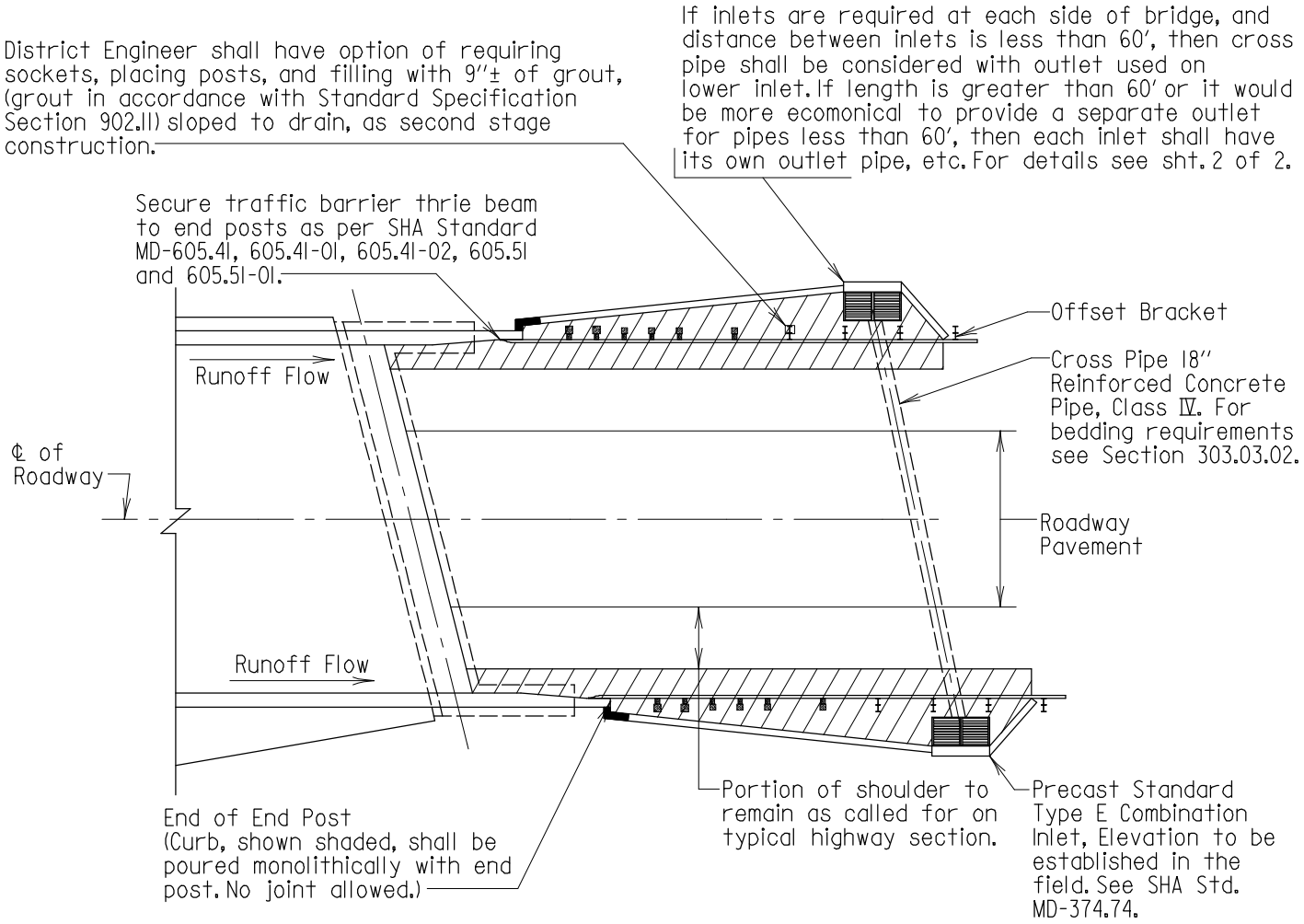

PLAN

Scale: 1" = 20'-0"

Notes:

1. Payment for Drainage Inlet at End of Bridge Structure shall be on an each basis. Cost for entire installation of hatched area, curb and gutter, inlet, etc. Cross pipe, outlet pipe, elbows and concrete end section shall be incidental to the unit cost of inlet. Outlet pad will be paid for separately.
2. Open Approach Roadway is defined as a highway with full shoulders, no curbed sections, sidewalks and/or raised medians.
3. See note on General Plan and Elevation as to which ends of structure will require inlets.
4. Traffic barrier posts shall be driven prior to placing concrete gutter pan except if option above is utilized.
5. See sheet 2 of 2 for additional details.

APPROVAL	
E.S. Friedman DIRECTOR OFFICE OF STRUCTURES	
DATE: 12/23/80	
REVISIONS	
SHA	FHWA
1-22-98	
2-11-00	
4-23-04	
1-30-07	

FHWA APPROVAL
DATE: 5-6-81

STATE OF MARYLAND
DEPARTMENT OF TRANSPORTATION
STATE HIGHWAY ADMINISTRATION
OFFICE OF STRUCTURES

DRAINAGE INLET
AT END OF BRIDGE STRUCTURE
(OPEN APPROACH ROADWAY)

STANDARD NO. SUB-DR-101 SHEET 1 OF 2

SUBSTRUCTURE - DRAINAGE

OLD NO. M(0.03)-80-123

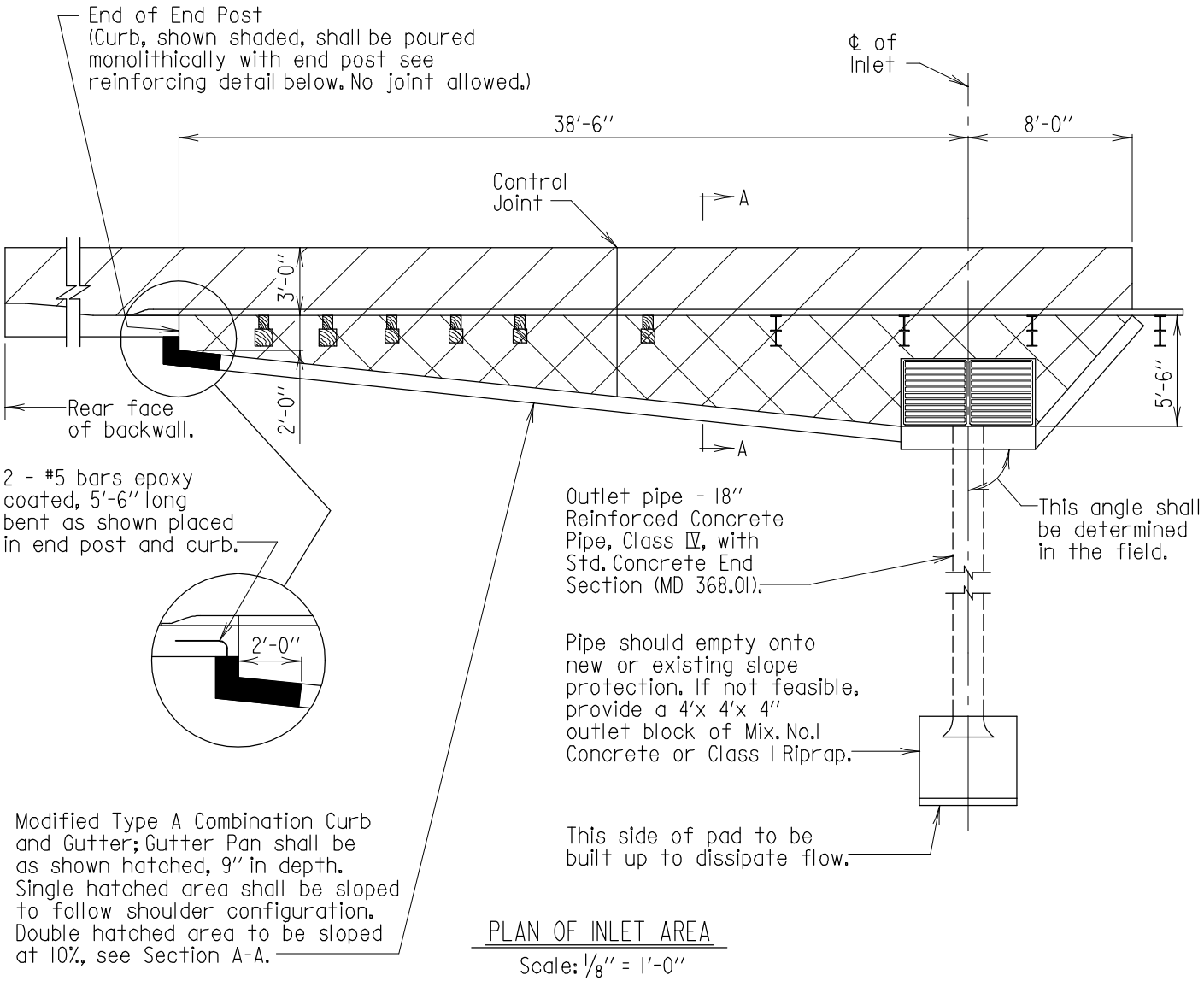

PLAN OF INLET AREA

Scale: 1/8" = 1'-0"

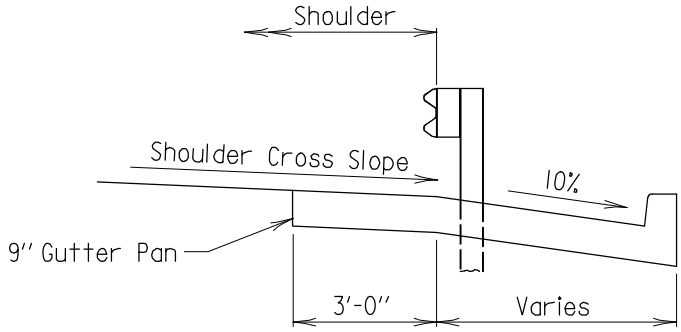

SECTION A-A

Scale: 1/4" = 1'-0"

APPROVAL		
E.S. Freedman DIRECTOR OFFICE OF STRUCTURES DATE: 10/22/90		
REVISIONS		
SHA	FHWA	
1-7-97		
2-11-00		
1-30-07		
FHWA APPROVAL DATE:		

STATE OF MARYLAND
DEPARTMENT OF TRANSPORTATION
STATE HIGHWAY ADMINISTRATION
OFFICE OF STRUCTURES

DRAINAGE INLET
AT END OF BRIDGE STRUCTURE
(OPEN APPROACH ROADWAY)

STANDARD NO. SUB-DR-101 SHEET 2 OF 2

SUBSTRUCTURE - DRAINAGE

OLD NO. M(0.03)-80-123

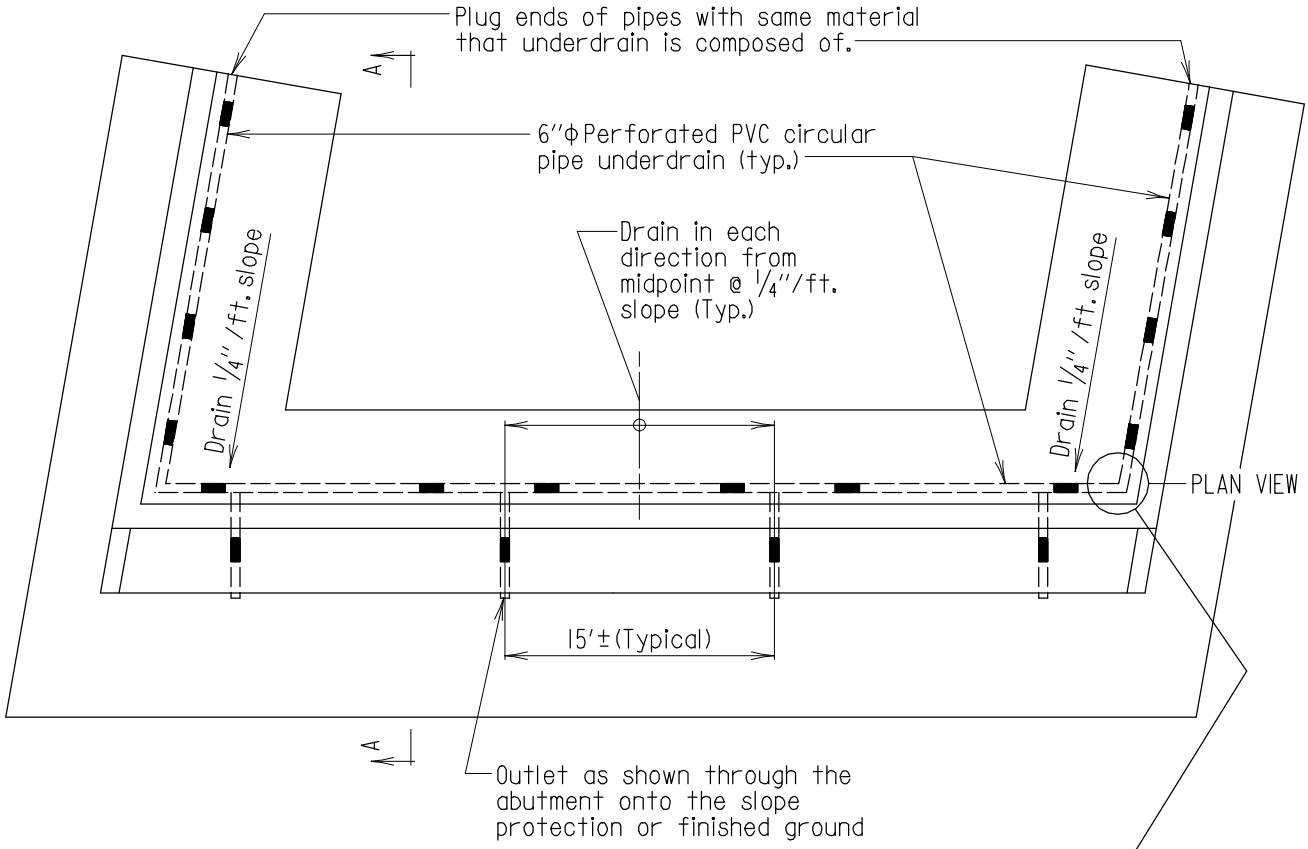

PLAN

Scale: 3/32" = 1'-0"

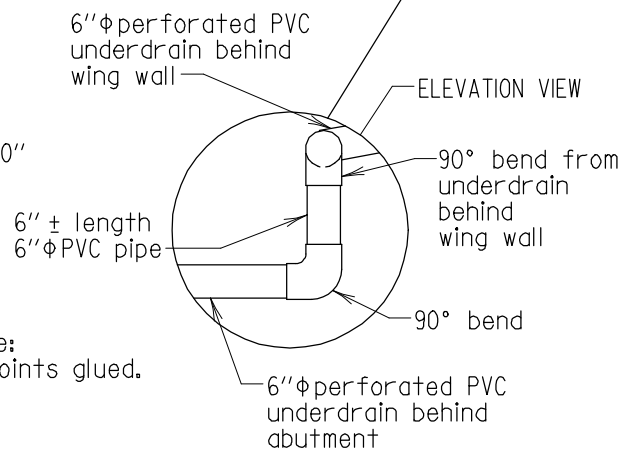

Note:
All joints glued.

Notes:

1. To be used for all fixed abutments or expansion abutments with lengths contributing to expansion less than or equal to 70 feet.
2. Minimum slope of Pipe Underdrain Outlets is 1/4"/ft.
3. For Section A-A see Sheet No. 2, 3 or 4
4. The drainage system behind each wing wall can be connected to the drainage system behind the abutment using 2 - 90° bends and a short length of pipe. This will necessitate the drainage system behind the wing wall be slightly higher.
5. For wing walls over 15 ft. long, the drainage system behind them may be independent of the drainage system behind the abutment. They can be outletted directly through the wing wall.
6. The cost of the PVC underdrains complete in place will be incidental to the Substructure Concrete item.
7. For section through wing wall, see Standard No. SUB-DR-203.

APPROVAL	
R.S. Friedman DIRECTOR OFFICE OF STRUCUTRES	
DATE: 3/4/80	
REVISIONS	
SHA	FHWA
2-9-96	
9-14-98	
10-16-12	
4-30-13	

FHWA APPROVAL	
DATE: 6-20-80	

STATE OF MARYLAND
DEPARTMENT OF TRANSPORTATION
STATE HIGHWAY ADMINISTRATION
OFFICE OF STRUCTURES

DRAINAGE SYSTEM AND BACKFILL FOR ABUTMENTS WITH FIXED BEARINGS OR EXPANSION BEARINGS WITH LENGTHS CONTRIBUTING TO EXPANSION LESS THEN OR EQUAL TO 70 FEET

STANDARD NO. SUB-DR-201 SHEET 1 OF 4

SUBSTRUCTURE - DRAINAGE

OLD NO. BR-SB(0.01)-80-101A

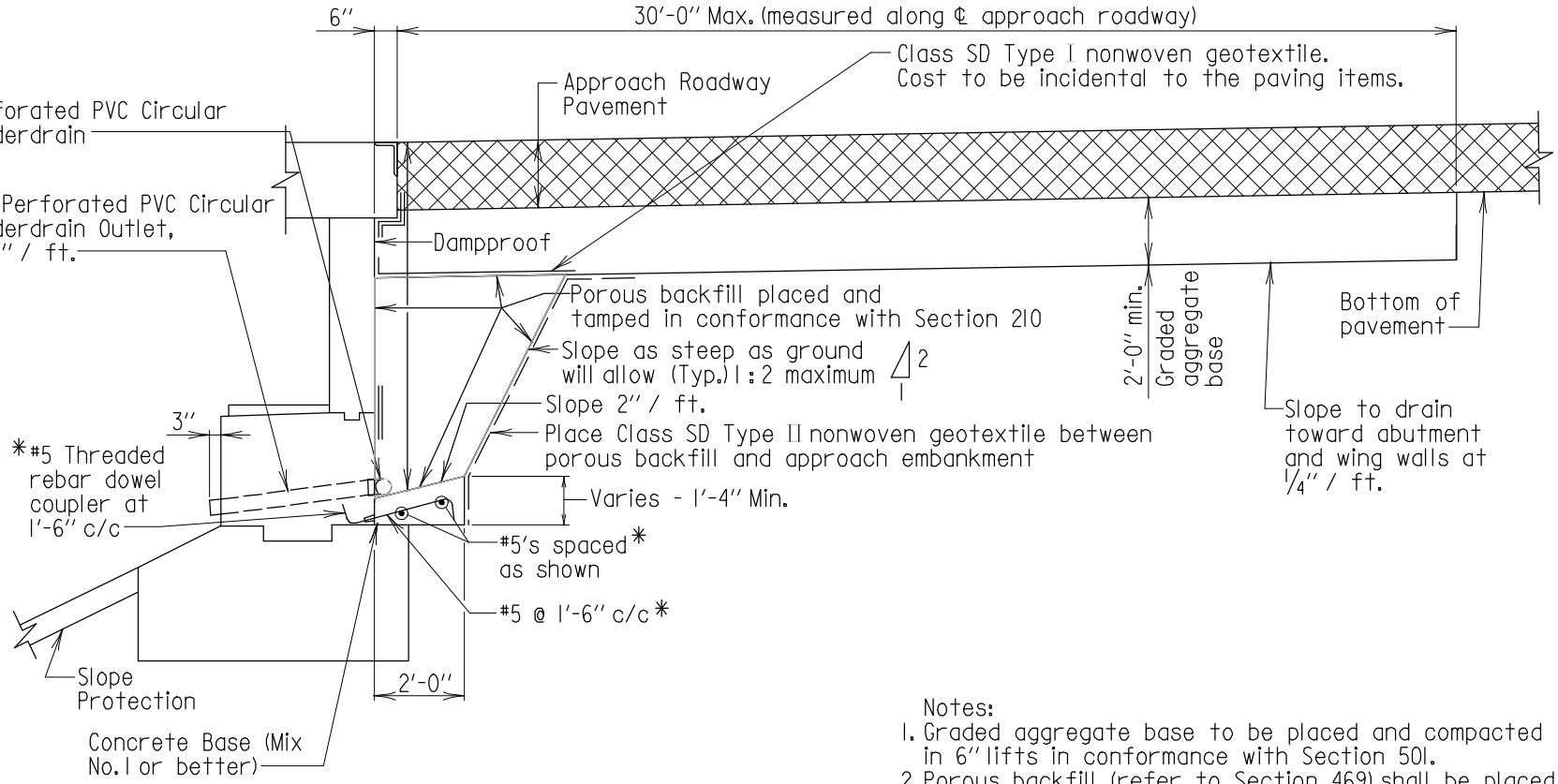

SECTION A-A
Scale: 1/4" = 1'-0"

Notes:
1. Graded aggregate base to be placed and compacted in 6" lifts in conformance with Section 501.
2. Porous backfill (refer to Section 469) shall be placed as shown behind the abutment and to the same geometrics behind the abutment wing walls when they parallel the highway. (See sheet 5 of 5)
3. The Contractor must provide a well compacted surface to place the geotextile and stone fill against. In fill areas it will be necessary to overfill a sufficient distance so that a well compacted surface will be produced when the overfill is removed. The removed material will be incidental to the pertinent Structure Concrete items.
4. The cost of the geotextile within the limits shown will be incidental to the pertinent Structure Concrete Items.

*If 1'-6" width of the concrete base is poured to rest on top of footing, the reinforcing can be eliminated. No additional compensation will be allowed for this option.

APPROVAL
DIRECTOR OFFICE OF STRUCTURES
DATE: 3/4/80

REVISIONS

SHA	FHWA
10-16-12	
4-30-13	
6-26-13	
10-2-14	

FHWA APPROVAL
DATE:

STATE OF MARYLAND
DEPARTMENT OF TRANSPORTATION
STATE HIGHWAY ADMINISTRATION
OFFICE OF STRUCTURES

DRAINAGE SYSTEM AND BACKFILL FOR ABUTMENTS (PEDESTAL) WITH FIXED BEARINGS OR EXPANSION BEARINGS WITH LENGTHS CONTRIBUTING TO EXPANSION LESS THEN OR EQUAL TO 70 FEET

STANDARD NO. SUB-DR-201

SHEET 2 OF 4

OLD NO. BR-SB(0.01)-80-101A

SUBSTRUCTURE - DRAINAGE

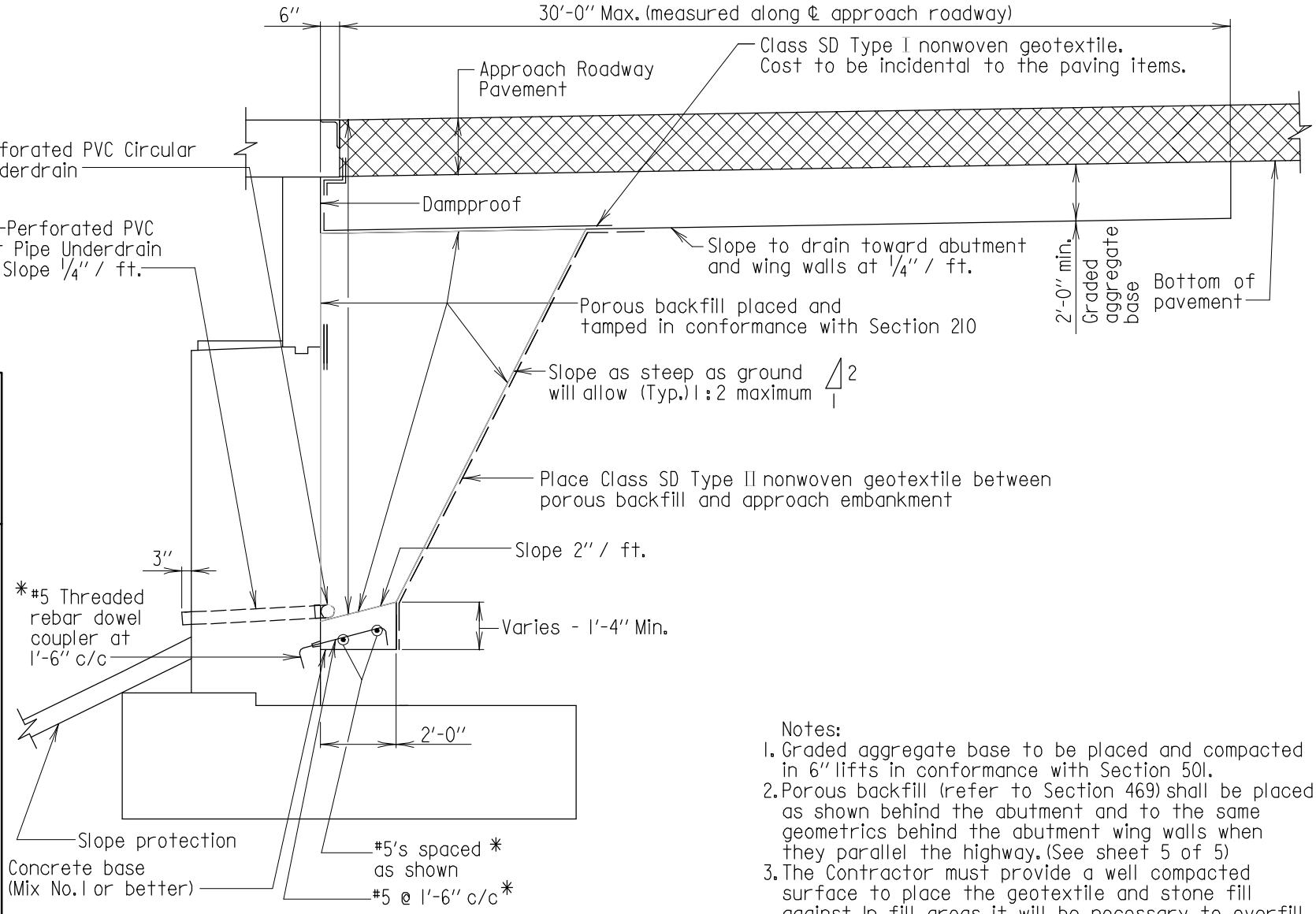

SECTION A-A
Scale: 1/4" = 1'-0"

*If 1'-6" width of the concrete base is poured to rest on top of footing, the reinforcing can be eliminated. No additional compensation will be allowed for this option.

Notes:

1. Graded aggregate base to be placed and compacted in 6" lifts in conformance with Section 501.
2. Porous backfill (refer to Section 469) shall be placed as shown behind the abutment and to the same geometrics behind the abutment wing walls when they parallel the highway. (See sheet 5 of 5)
3. The Contractor must provide a well compacted surface to place the geotextile and stone fill against. In fill areas it will be necessary to overfill a sufficient distance so that a well compacted surface will be produced when the overfill is removed. The removed material will be incidental to the pertinent Structure Concrete items.
4. The cost of the geotextile within the limits shown will be incidental to the pertinent Strucutre Concrete Items.

APPROVAL
OFFICE OF STRUCUTRES DIRECTOR
DATE: 3/4/80

REVISIONS

SHA	10-16-12
	4-30-13
FHWA	6-26-13
	10-2-14

FHWA APPROVAL
DATE:

STATE OF MARYLAND
DEPARTMENT OF TRANSPORTATION
STATE HIGHWAY ADMINISTRATION
OFFICE OF STRUCTURES

DRAINAGE SYSTEM AND BACKFILL FOR ABUTMENTS (SEMI-CANTILEVER) WITH FIXED BEARINGS OR EXPANSION BEARINGS WITH LENGTHS CONTRIBUTING TO EXPANSION LESS THEN OR EQUAL TO 70 FEET

STANDARD NO. SUB-DR-201

SHEET 3 OF 4

OLD NO. BR-SB(0.01)-80-101A

SUBSTRUCTURE - DRAINAGE

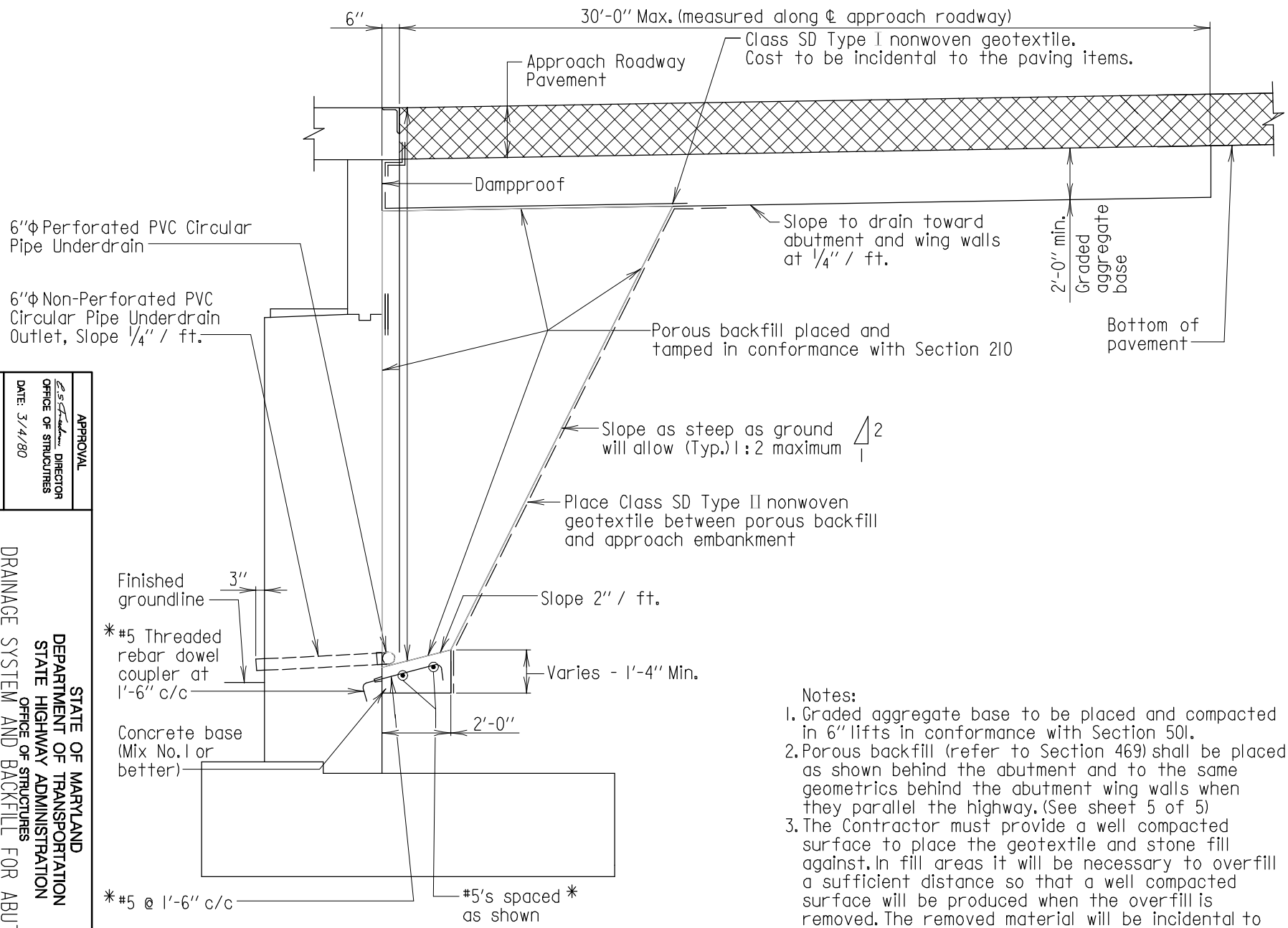

*If 1'-6" width of the concrete base is poured to rest on top of footing, the reinforcing can be eliminated. No additional compensation will be allowed for this option.

SECTION A-A
Scale: 1/4" = 1'-0"

Notes:

1. Graded aggregate base to be placed and compacted in 6" lifts in conformance with Section 501.
2. Porous backfill (refer to Section 469) shall be placed as shown behind the abutment and to the same geometrics behind the abutment wing walls when they parallel the highway. (See sheet 5 of 5)
3. The Contractor must provide a well compacted surface to place the geotextile and stone fill against. In fill areas it will be necessary to overfill a sufficient distance so that a well compacted surface will be produced when the overfill is removed. The removed material will be incidental to the pertinent Structure Concrete items.
4. The cost of the geotextile within the limits shown will be incidental to the pertinent Structure Concrete Items.

APPROVAL
OFFICE OF STRUCTURES DIRECTOR
DATE: 3/4/80

REVISIONS

SHA	10-16-12
	4-30-13
FHWA	6-26-13
	10-2-14

FHWA APPROVAL
DATE:

STATE OF MARYLAND
DEPARTMENT OF TRANSPORTATION
STATE HIGHWAY ADMINISTRATION
OFFICE OF STRUCTURES

DRAINAGE SYSTEM AND BACKFILL FOR ABUTMENTS (FULL CANTILEVER) WITH FIXED BEARINGS OR EXPANSION BEARINGS WITH LENGTHS CONTRIBUTING TO EXPANSION LESS THEN OR EQUAL TO 70 FEET

STANDARD NO. SUB-DR-201

SHEET 4 OF 4

OLD NO. BR-SB(0.01)-80-101A

SUBSTRUCTURE - DRAINAGE

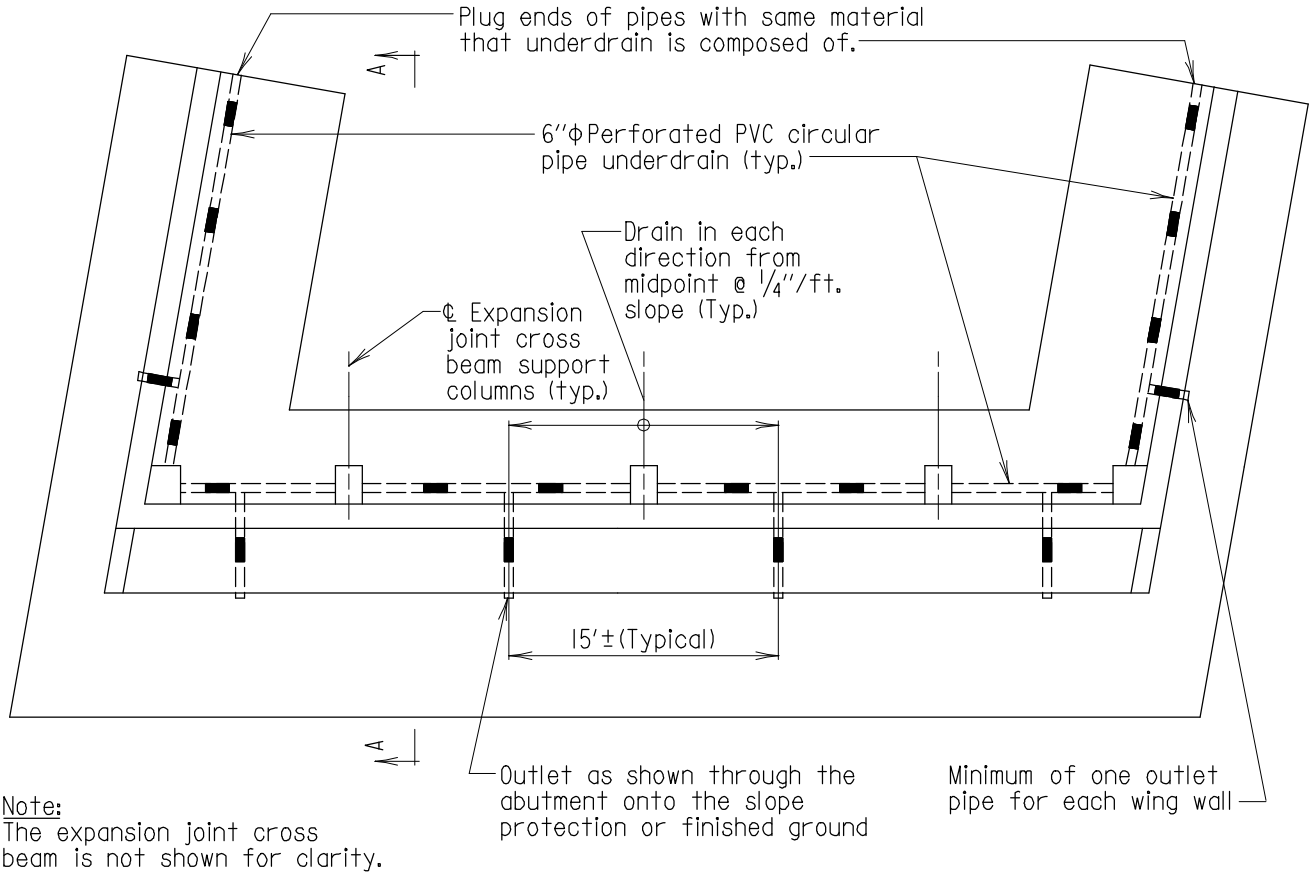

Note:
The expansion joint cross beam is not shown for clarity.

PLAN

Scale: 3/32" = 1'-0"

Notes:

1. To be used for all expansion abutments where an expansion cross beam is called for.
2. Minimum slope of Pipe Underdrain Outlets is 1/4"/ft.
3. For Section A-A see Sheet No. 2, 3 or 4
4. The drainage system behind wing walls shall be independent of the drainage system behind the abutment. They shall be outletted directly through the wing wall.
5. The cost of the PVC underdrains complete in place will be incidental to the Substructure Concrete item.
6. For section through wing wall, see Standard No. SUB-DR-203.

APPROVAL	
R.S. Freedman DIRECTOR OFFICE OF STRUCUTRES	
DATE: 4/30/13	
REVISIONS	
SHA	FHWA

FHWA APPROVAL
DATE:

STATE OF MARYLAND
DEPARTMENT OF TRANSPORTATION
STATE HIGHWAY ADMINISTRATION
OFFICE OF STRUCTURES

DRAINAGE SYSTEM AND BACKFILL FOR ABUTMENTS WITH EXPANSION BEARINGS WITH LENGTHS CONTRIBUTING TO EXPANSION GREATER THAN 70 FEET

STANDARD NO. SUB-DR-202 SHEET 1 OF 4

SUBSTRUCTURE - DRAINAGE

OLD NO. BR-SB(0.01)-80-101B

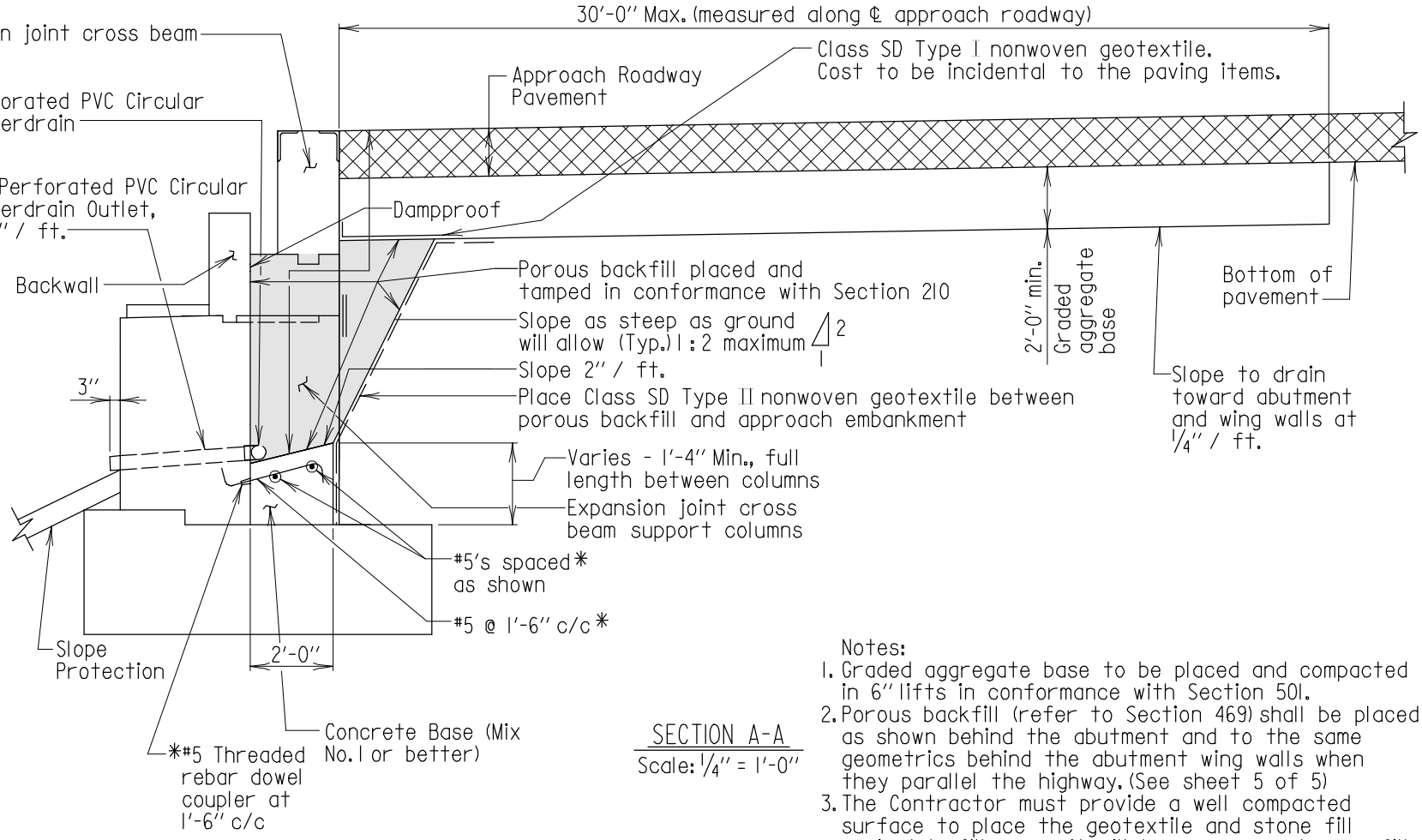

SECTION A-A

Scale: 1/4" = 1'-0"

Notes:

1. Graded aggregate base to be placed and compacted in 6" lifts in conformance with Section 501.
2. Porous backfill (refer to Section 469) shall be placed as shown behind the abutment and to the same geometrics behind the abutment wing walls when they parallel the highway. (See sheet 5 of 5)
3. The Contractor must provide a well compacted surface to place the geotextile and stone fill against. In fill areas it will be necessary to overfill a sufficient distance so that a well compacted surface will be produced when the overfill is removed. The removed material will be incidental to the pertinent Structure Concrete items.
4. The cost of the geotextile within the limits shown will be incidental to the pertinent Structure Concrete Items.

* If 1'-6" width of the concrete base is poured to rest on top of footing, the reinforcing can be eliminated. No additional compensation will be allowed for this option.

APPROVAL
DIRECTOR OFFICE OF STRUCTURES
DATE: 4/30/13

REVISIONS
SHA 10-2-14
FHWA

FHWA APPROVAL
DATE:

STATE OF MARYLAND
DEPARTMENT OF TRANSPORTATION
STATE HIGHWAY ADMINISTRATION
OFFICE OF STRUCTURES

DRAINAGE SYSTEM AND
BACKFILL FOR ABUTMENTS (PEDESTAL) WITH
EXPANSION BEARINGS WITH LENGTHS CONTRIBUTING TO
EXPANSION GREATER THAN 70 FEET

STANDARD NO. SUB-DR-202

SHEET 2 OF 4

OLD NO. BR-SB(0.01)-80-101B

SUBSTRUCTURE - DRAINAGE

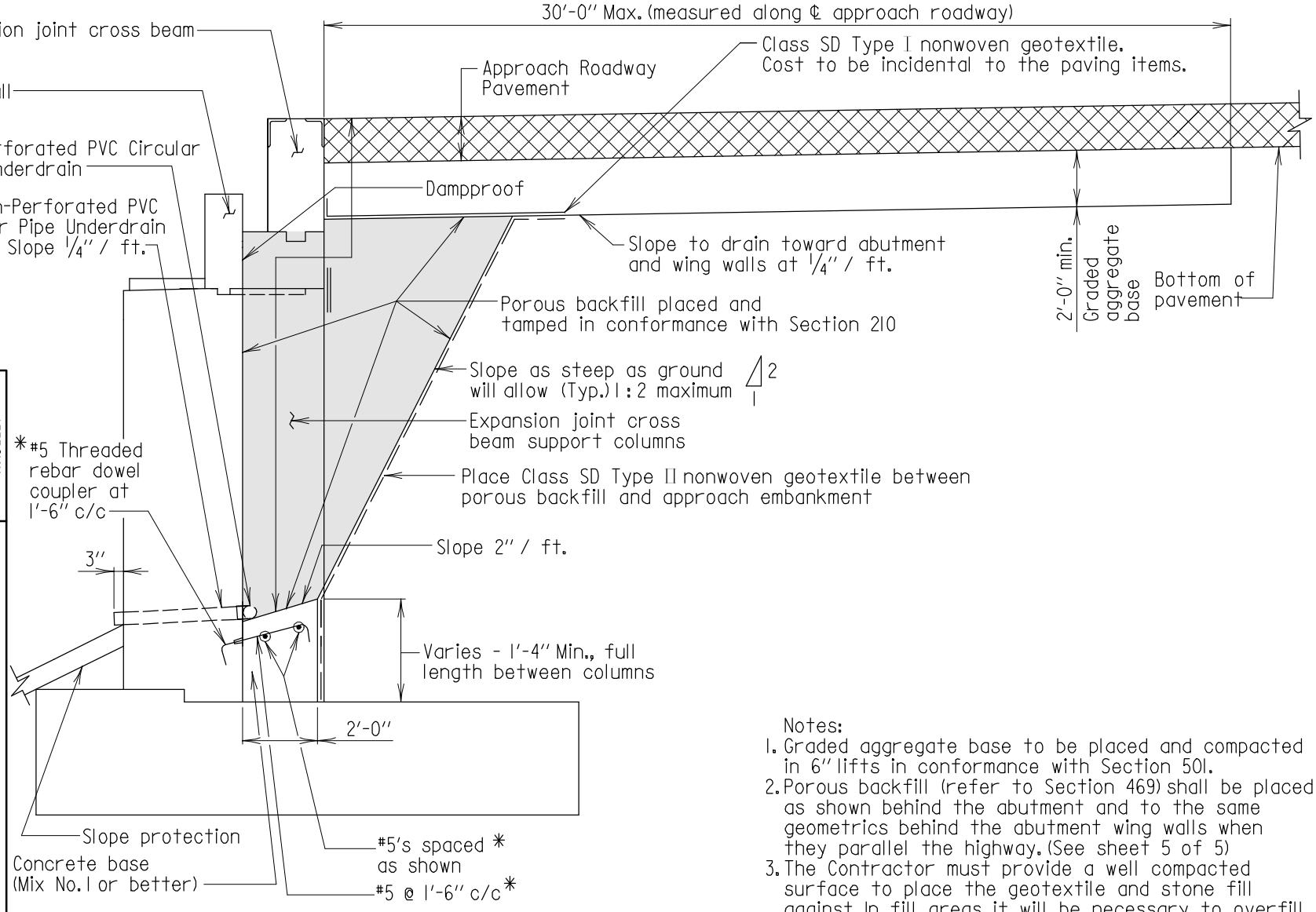

SECTION A-A
Scale: 1/4" = 1'-0"

*If 1'-6" width of the concrete base is poured to rest on top of footing, the reinforcing can be eliminated. No additional compensation will be allowed for this option.

Notes:
1. Graded aggregate base to be placed and compacted in 6" lifts in conformance with Section 501.
2. Porous backfill (refer to Section 469) shall be placed as shown behind the abutment and to the same geometrics behind the abutment wing walls when they parallel the highway. (See sheet 5 of 5)
3. The Contractor must provide a well compacted surface to place the geotextile and stone fill against. In fill areas it will be necessary to overfill a sufficient distance so that a well compacted surface will be produced when the overfill is removed. The removed material will be incidental to the pertinent Structure Concrete items.
4. The cost of the geotextile within the limits shown will be incidental to the pertinent Structure Concrete Items.

APPROVAL
OFFICE OF STRUCTURES DIRECTOR
DATE: 4/30/13

REVISIONS
SHA 10-2-14
FHWA

FHWA APPROVAL
DATE:

STATE OF MARYLAND
DEPARTMENT OF TRANSPORTATION
STATE HIGHWAY ADMINISTRATION
OFFICE OF STRUCTURES

DRAINAGE SYSTEM AND BACKFILL
FOR ABUTMENTS (SEMI-CANTILEVER) WITH
EXPANSION BEARINGS WITH LENGTHS CONTRIBUTING TO
EXPANSION GREATER THAN 70 FEET

STANDARD NO. SUB-DR-202

SHEET 3 OF 4

OLD NO. BR-SB(0.01)-80-101B

SUBSTRUCTURE - DRAINAGE

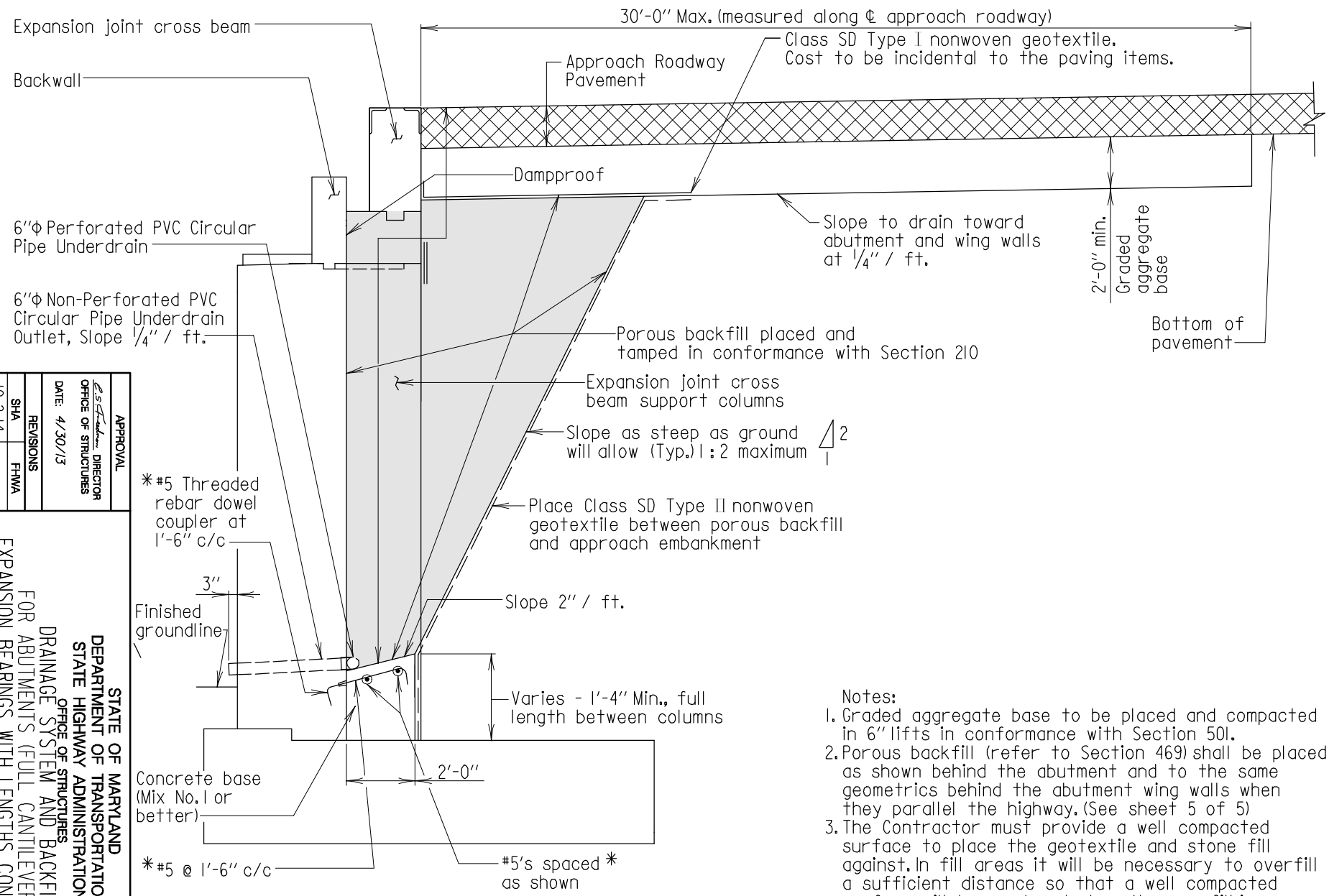

* If 1'-6" width of the concrete base is poured to rest on top of footing, the reinforcing can be eliminated. No additional compensation will be allowed for this option.

SECTION A-A
Scale: 1/4" = 1'-0"

Notes:

1. Graded aggregate base to be placed and compacted in 6" lifts in conformance with Section 501.
2. Porous backfill (refer to Section 469) shall be placed as shown behind the abutment and to the same geometrics behind the abutment wing walls when they parallel the highway. (See sheet 5 of 5)
3. The Contractor must provide a well compacted surface to place the geotextile and stone fill against. In fill areas it will be necessary to overfill a sufficient distance so that a well compacted surface will be produced when the overfill is removed. The removed material will be incidental to the pertinent Structure Concrete items.
4. The cost of the geotextile within the limits shown will be incidental to the pertinent Strucutre Concrete Items.

STATE OF MARYLAND
DEPARTMENT OF TRANSPORTATION
STATE HIGHWAY ADMINISTRATION
OFFICE OF STRUCTURES

DRAINAGE SYSTEM AND BACKFILL FOR ABUTMENTS (FULL CANTILEVER) WITH EXPANSION BEARINGS WITH LENGTHS CONTRIBUTING TO EXPANSION GREATER THAN 70 FEET

APPROVAL
DIRECTOR OFFICE OF STRUCTURES
DATE: 4/30/13

REVISIONS
SHA 10-2-14
FHWA

FHWA APPROVAL
DATE:

STANDARD NO. SUB-DR-202

SHEET 4 OF 4

OLD NO. BR-SB(0.01)-80-101B

SUBSTRUCTURE - DRAINAGE

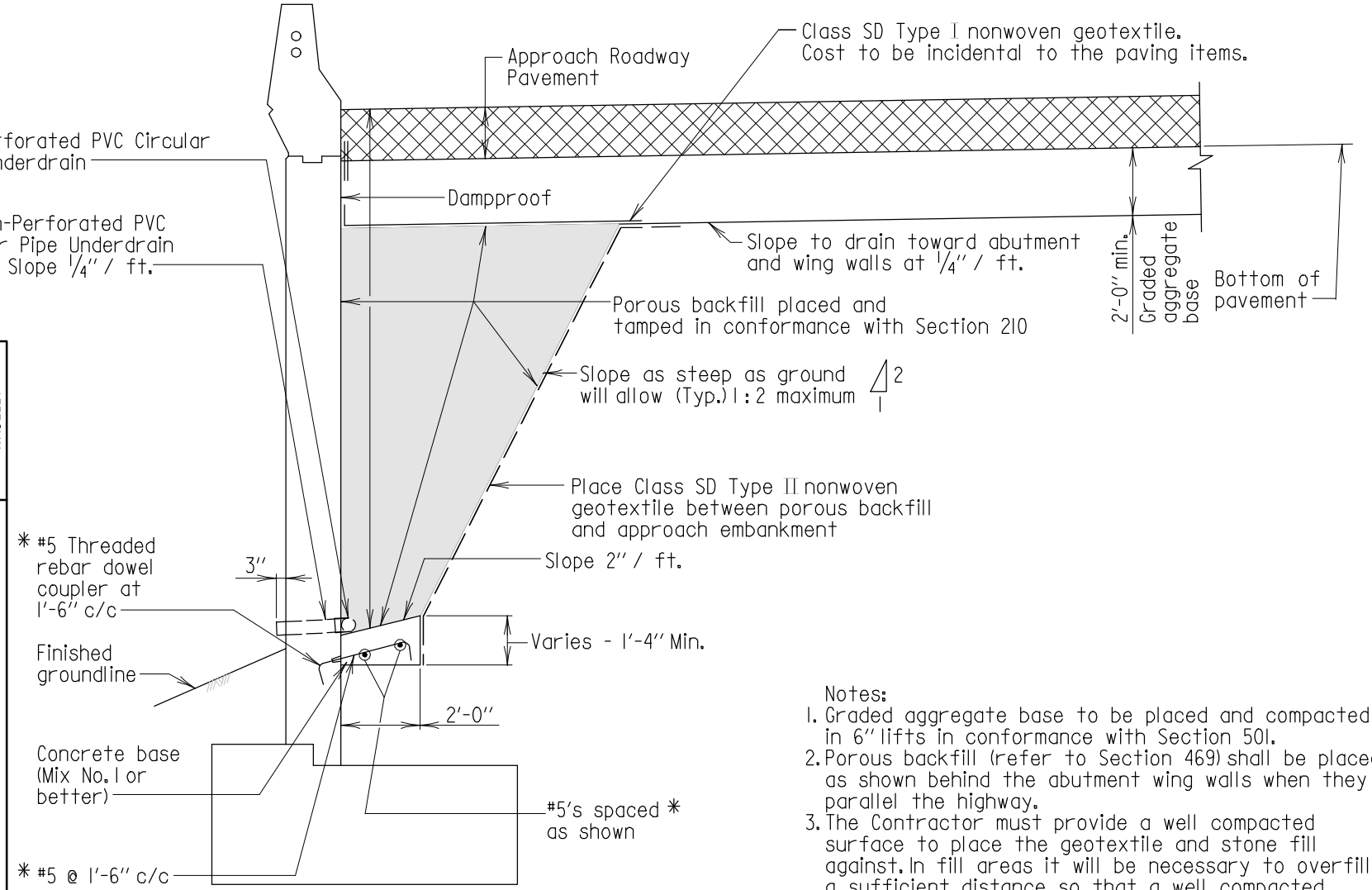

SECTION THROUGH WING WALL

Scale: 1/4" = 1'-0"

* If 1'-6" width of the concrete base is poured to rest on top of footing, the reinforcing can be eliminated. No additional compensation will be allowed for this option.

Notes:

1. Graded aggregate base to be placed and compacted in 6" lifts in conformance with Section 501.
2. Porous backfill (refer to Section 469) shall be placed as shown behind the abutment wing walls when they parallel the highway.
3. The Contractor must provide a well compacted surface to place the geotextile and stone fill against. In fill areas it will be necessary to overfill a sufficient distance so that a well compacted surface will be produced when the overfill is removed. The removed material will be incidental to the pertinent Structure Concrete items.
4. The cost of the geotextile within the limits shown will be incidental to the pertinent Structure Concrete items.
5. For bridges with wing walls that are not parallel to highway see std. no. RW-301 for details.

APPROVAL

DIRECTOR OFFICE OF STRUCTURES

DATE: 4/30/13

REVISIONS

SHA	10-2-14
FHWA	

FHWA APPROVAL

DATE:

STATE OF MARYLAND
DEPARTMENT OF TRANSPORTATION
STATE HIGHWAY ADMINISTRATION
OFFICE OF STRUCTURES

DRAINAGE SYSTEM AND BACKFILL FOR WING WALLS THAT ARE PARALLEL TO THE HIGHWAY

STANDARD NO. SUB-DR-203

SHEET 1 OF 1

OLD NO. BR-SB10.01-80-101C

SUBSTRUCTURE - DRAINAGE

SUBSTRUCTURE

ABUTMENT

(SUB-AB)

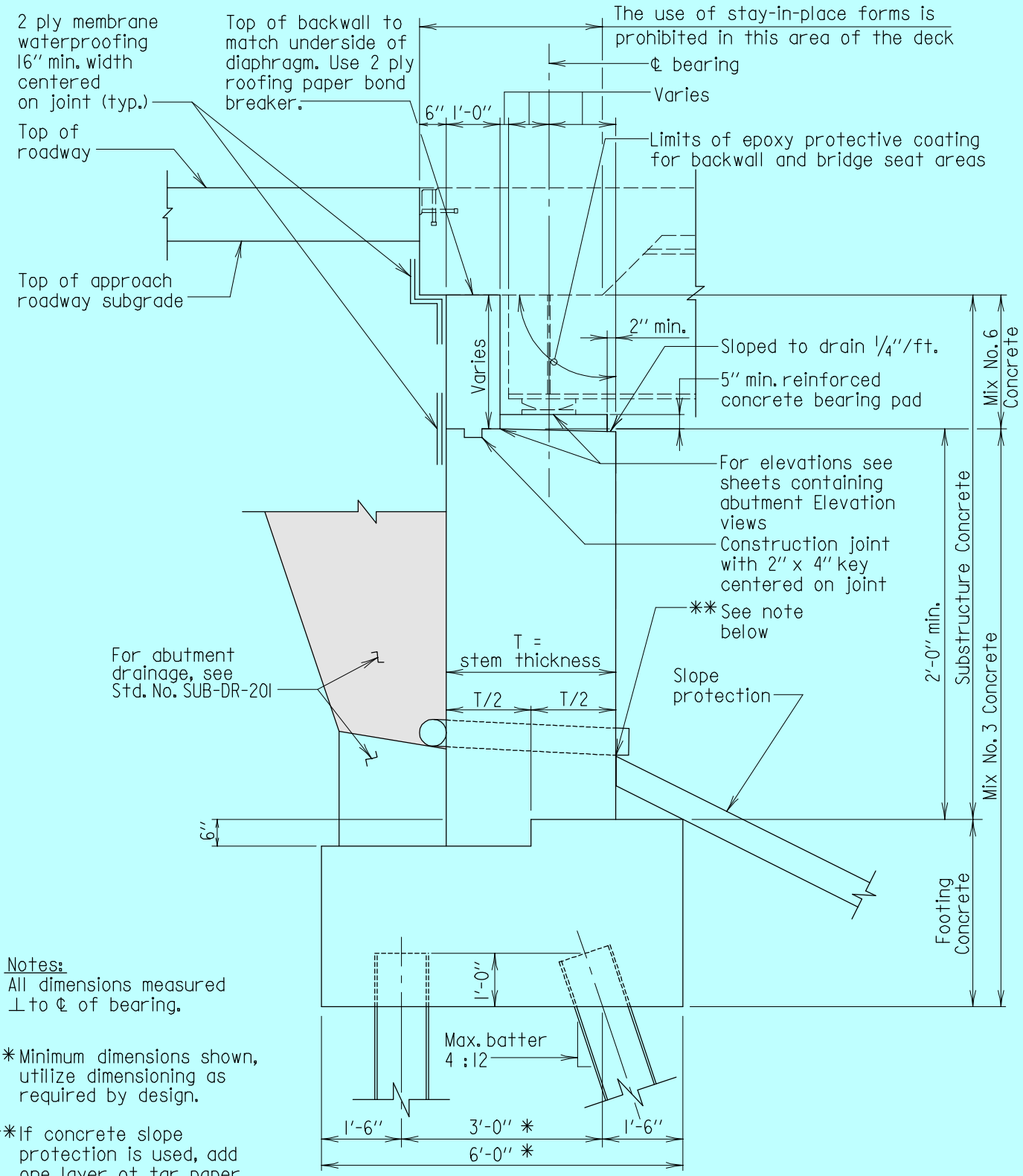

SECTION

Scale: 3/8" = 1'-0"

Notes:
All dimensions measured ⊥ to ℄ of bearing.

* Minimum dimensions shown, utilize dimensioning as required by design.

** If concrete slope protection is used, add one layer of tar paper full contact area where substructure unit is adjacent to slope protection. The open joint that remains after slope protection has cured shall be filled with joint sealer conforming to Specifications.

* FOR OFFICE USE ONLY *

APPROVAL	
R.S. Freedman DIRECTOR OFFICE OF STRUCTURES DATE: 12/20/11	
REVISIONS	
SHA	FHWA
7-26-12	
6-26-13	
FHWA APPROVAL	
DATE:	

STATE OF MARYLAND
DEPARTMENT OF TRANSPORTATION
STATE HIGHWAY ADMINISTRATION
OFFICE OF STRUCTURES

TYPICAL SECTION FOR CANTILEVER ABUTMENTS ON PILES CARRYING STEEL GIRDERS WITH STEEL FIXED BEARINGS OR STEEL EXPANSION BEARINGS WITH LENGTH CONTRIBUTING TO EXPANSION ≤ 70 FT.

STANDARD NO. SUB-AB-101 SHEET 1 OF 4

SUBSTRUCTURE - ABUT

OLD NO. BR-SB(6.59)-11-390

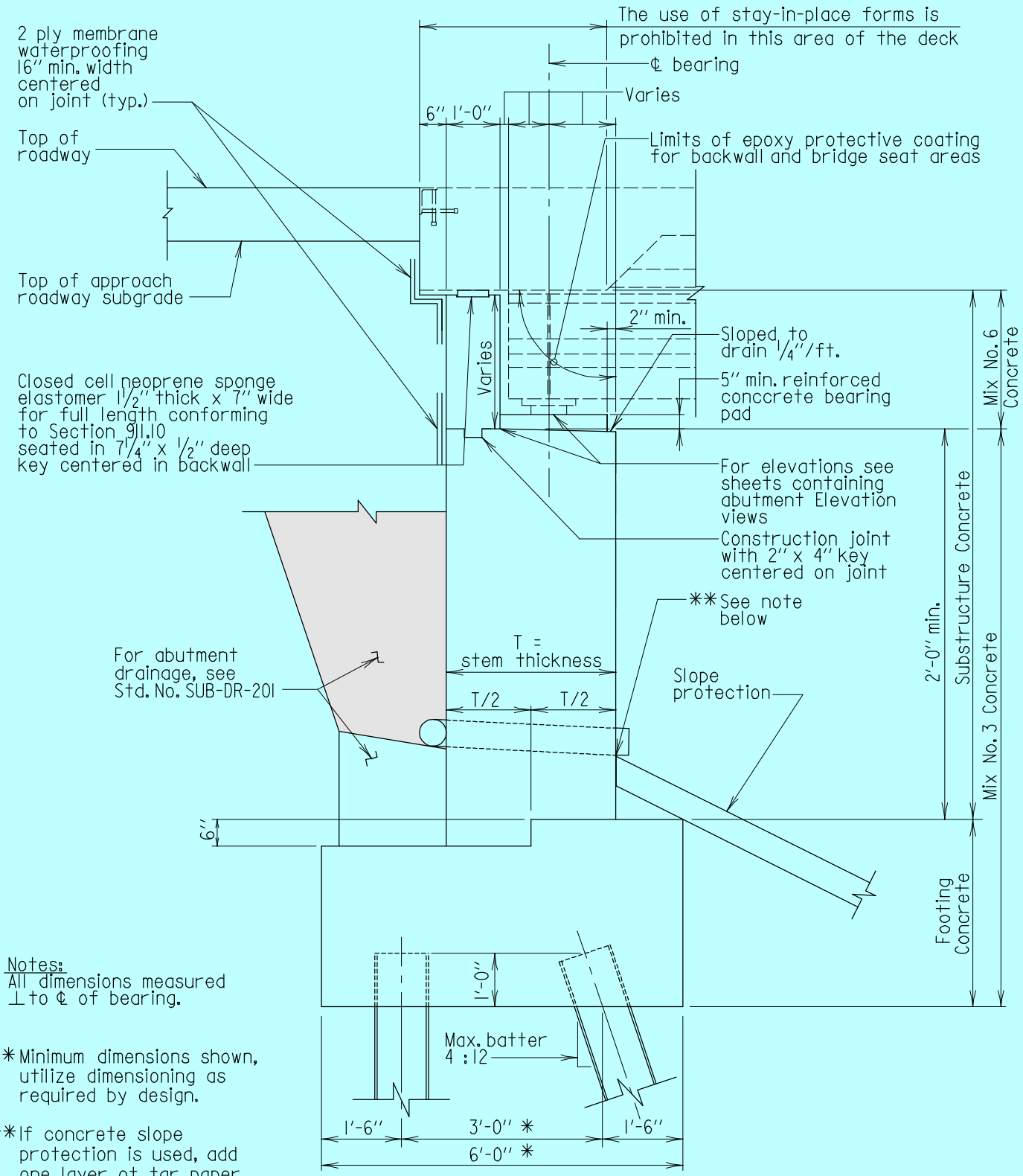

SECTION
Scale: 3/8″ = 1′-0″

Notes:
All dimensions measured ⊥ to ℄ of bearing.

* Minimum dimensions shown, utilize dimensioning as required by design.

** If concrete slope protection is used, add one layer ot tar paper full contact area where substructure unit is adjacent to slope protection. The open joint that remains after slope protection has cured shall be filled with joint sealer conforming to Specifications.

* FOR OFFICE USE ONLY *

APPROVAL	
R. S. Freedman DIRECTOR OFFICE OF STRUCTURES DATE: 12/20/11	
REVISIONS	
SHA	FHWA
6-26-13	
FHWA APPROVAL	
DATE:	

STATE OF MARYLAND
DEPARTMENT OF TRANSPORTATION
STATE HIGHWAY ADMINISTRATION
OFFICE OF STRUCTURES

TYPICAL SECTION FOR CANTILEVER ABUTMENTS ON PILES CARRYING PRESTRESSED CONCRETE GIRDERS WITH ELASTOMERIC FIXED BEARINGS OR ELASTOMERIC EXPANSION BEARINGS WITH LENGTH CONTRIBUTING TO EXPANSION ≤ 70 FT.

STANDARD NO. SUB-AB-101 SHEET 2 OF 4

SUBSTRUCTURE - ABUT

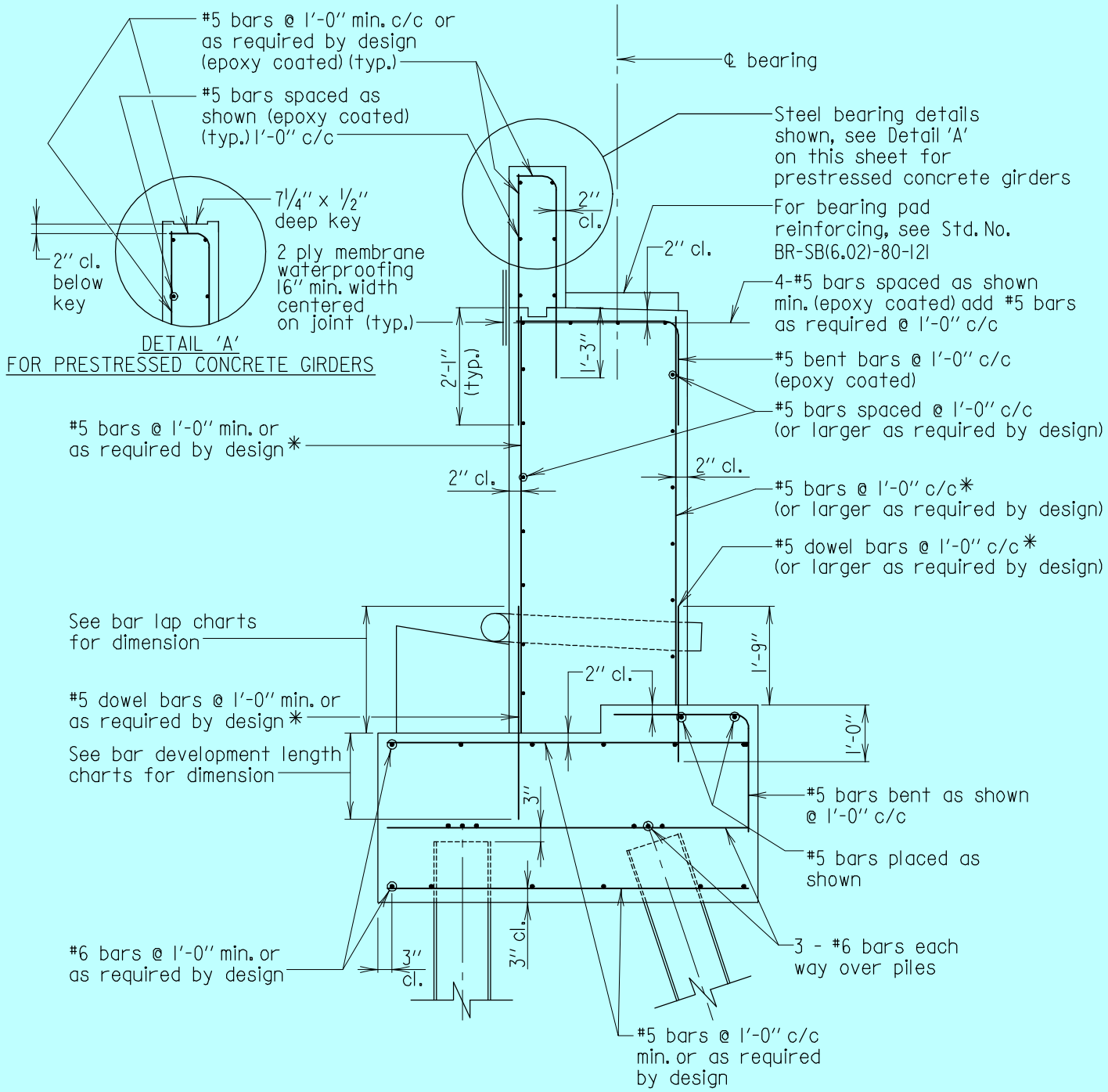

FOR STEEL GIRDERS**

SECTION WITH REINFORCEMENT

Scale: ⅜" = 1'-0"

Notes:

1. All dimensions, bar sizes, and bar spacings are minimum; if required by design, modify.
*2. Contractor has option of lapping stem reinforcing and dowels as shown; or extending dowel reinforcement with no splicing. However, no additional compensation to Contractor will be allowed for whichever alternative is selected.
**3. For abutment modifications carrying prestressed concrete girders see Detail 'A' this sheet.

* FOR OFFICE USE ONLY *

APPROVAL	
R.S. Freedman DIRECTOR OFFICE OF STRUCTURES	
DATE: 12/20/11	
REVISIONS	
SHA	FHWA
12-4-13	
FHWA APPROVAL	
DATE:	

STATE OF MARYLAND
DEPARTMENT OF TRANSPORTATION
STATE HIGHWAY ADMINISTRATION
OFFICE OF STRUCTURES

TYPICAL SECTION FOR CANTILEVER ABUTMENTS ON PILES WITH FIXED BEARINGS OR EXPANSION BEARINGS WITH LENGTH CONTRIBUTING TO EXPANSION ≤ 70 FT.
REINFORCEMENT DETAILS

STANDARD NO. SUB-AB-101 SHEET 3 OF 4

SUBSTRUCTURE - ABUT

OLD NO. BR-SB(6.59)-11-390

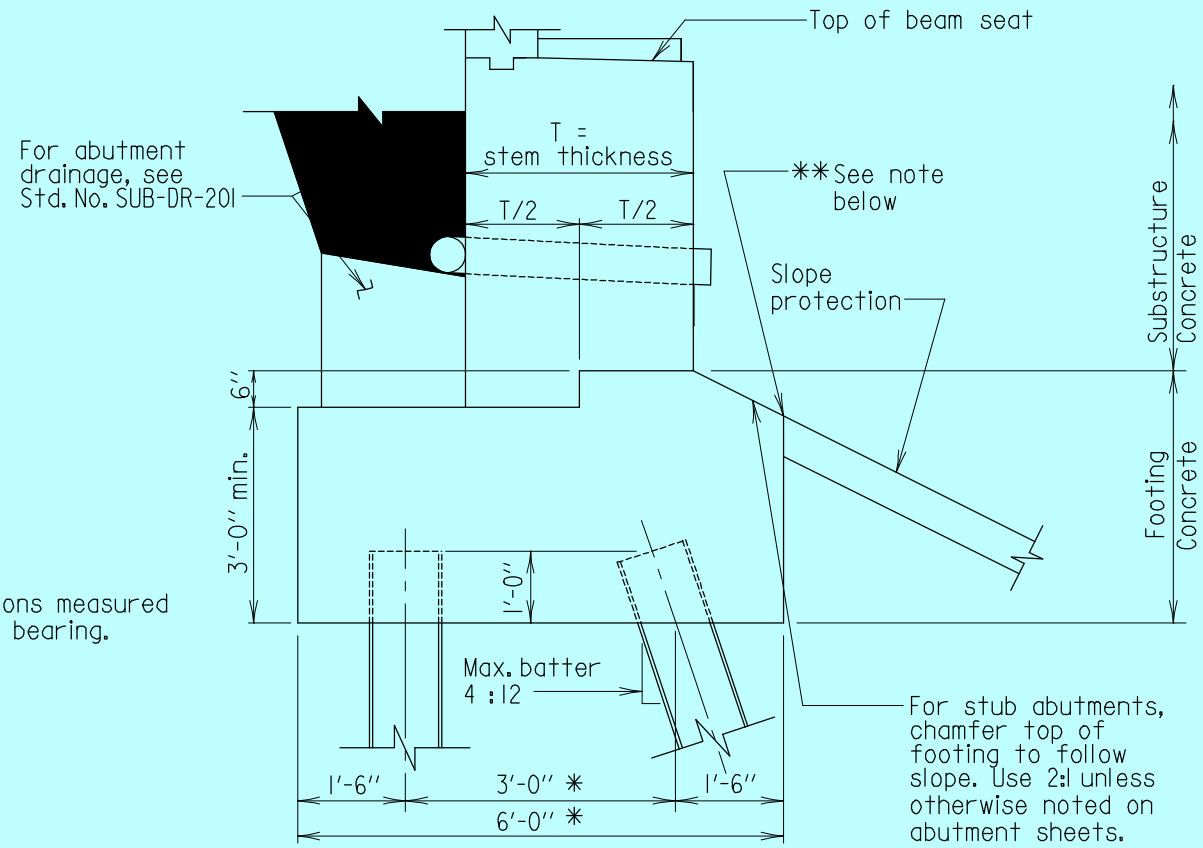

Note:
All dimensions measured ⊥ to ℄ of bearing.

TYPICAL SECTION

Scale: 3/8" = 1'-0"

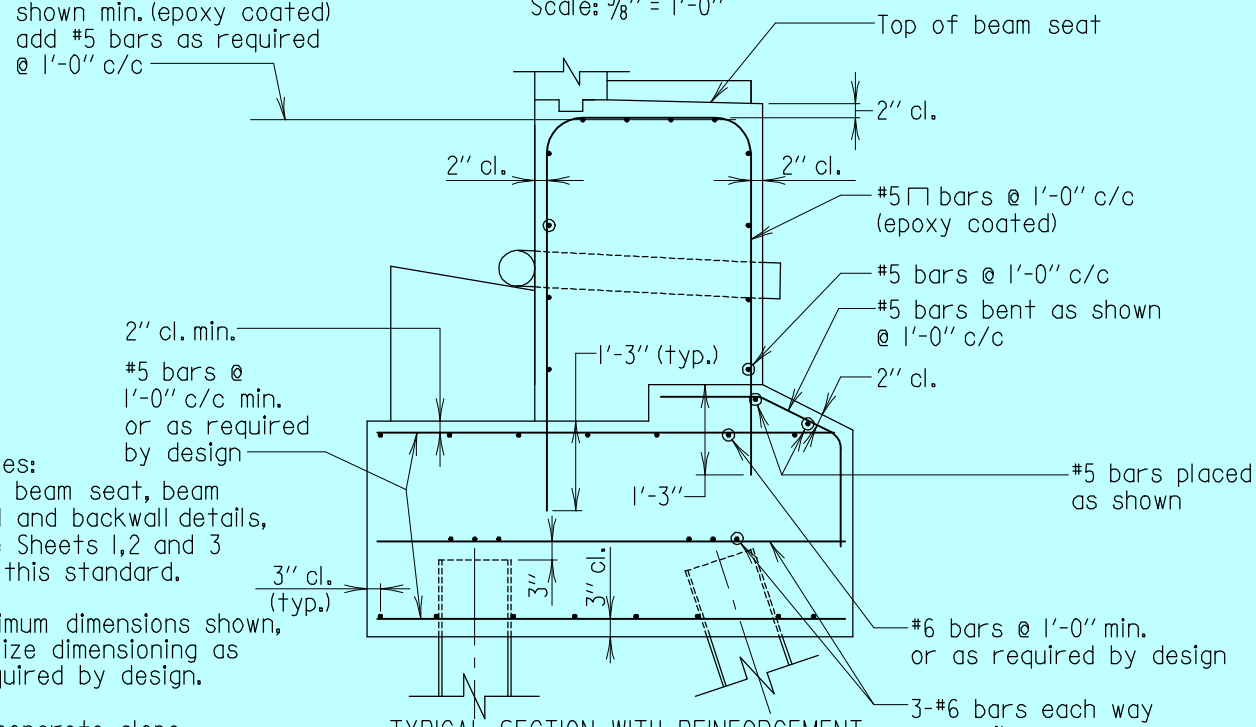

Notes:
For beam seat, beam pad and backwall details, see Sheets 1,2 and 3 of this standard.

* Minimum dimensions shown, utilize dimensioning as required by design.

** If concrete slope protection is used, add one layer of tar paper full contact area where substructure unit is adjacent to slope protection. The open joint that remains after slope protection has cured shall be filled with joint sealer conforming to Specifications.

TYPICAL SECTION WITH REINFORCEMENT

Scale: 3/8" = 1'-0"

* FOR OFFICE USE ONLY *

APPROVAL	
E.S. Freedman DIRECTOR OFFICE OF STRUCTURES	
DATE: 12/20/11	
REVISIONS	
SHA	FHWA

FHWA APPROVAL
DATE:

STATE OF MARYLAND
DEPARTMENT OF TRANSPORTATION
STATE HIGHWAY ADMINISTRATION
OFFICE OF STRUCTURES

TYPICAL SECTION FOR STUB ABUTMENTS ON PILES WITH FIXED BEARINGS OR EXPANSION BEARINGS WITH LENGTH CONTRIBUTING TO EXPANSION ≤ 70 FT.

STANDARD NO. SUB-AB-101 SHEET 4 OF 4

SUBSTRUCTURE - ABUT

OLD NO. BR-SB(6.59)-11-390

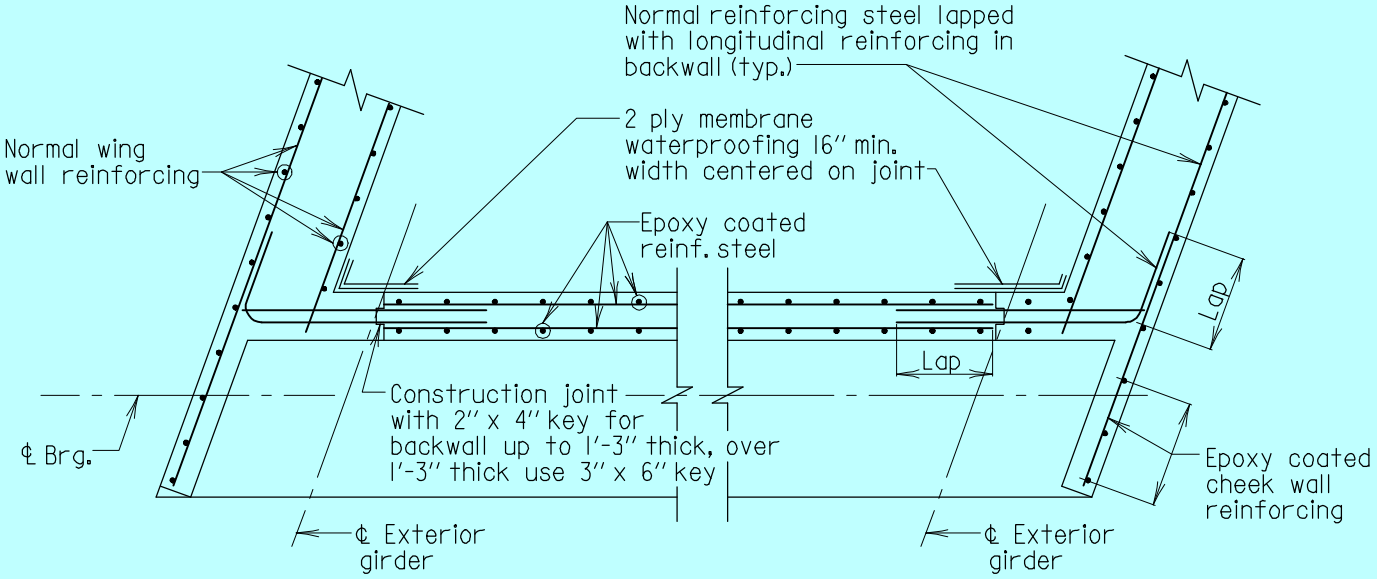

SECTION ABOVE BRIDGE SEAT

Scale: 1/4" = 1'-0"

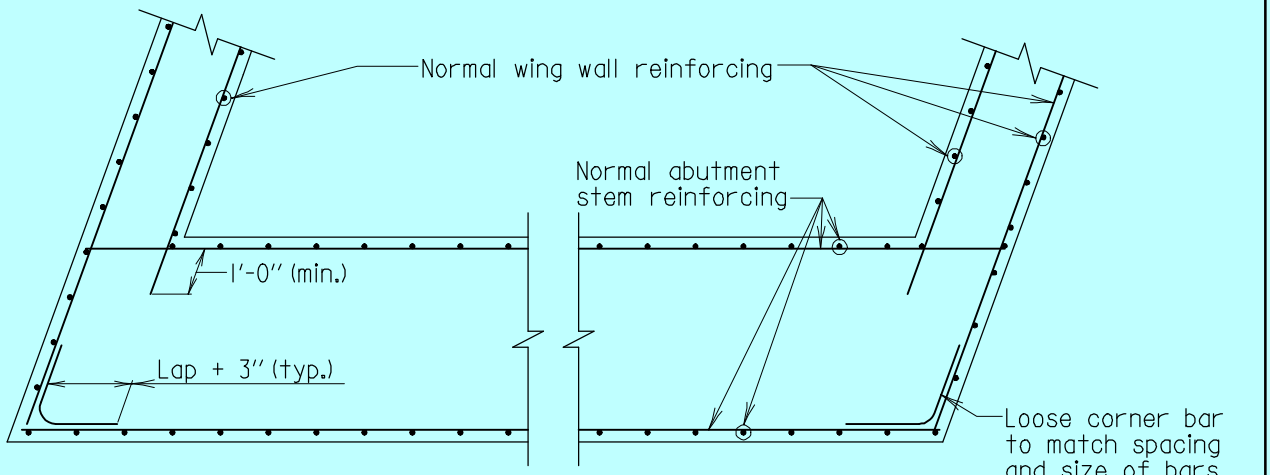

SECTION BELOW BRIDGE SEAT

Scale: 1/4" = 1'-0"

Note:
1. For bar lap lengths, see appropriate bar lap charts.
2. For normal reinforcing steel size and spacing refer to typical abutment and wing wall sections.

* FOR OFFICE USE ONLY *

APPROVAL	
R.S. Freedman DIRECTOR OFFICE OF STRUCTURES DATE: 12/20/11	
REVISIONS	
SHA	FHWA

FHWA APPROVAL
DATE:

STATE OF MARYLAND
DEPARTMENT OF TRANSPORTATION
STATE HIGHWAY ADMINISTRATION
OFFICE OF STRUCTURES

WING WALL/ABUTMENT CONNECTIONS FOR FIXED BEARINGS OR EXPANSION BEARINGS WITH LENGTH CONTRIBUTING TO EXPANSION ≤ 70 FT. REINFORCING DETAILS

STANDARD NO. SUB-AB-102 SHEET 1 OF 1

SUBSTRUCTURE - ABUT

OLD NO. BR-SB(6.60)-11-391

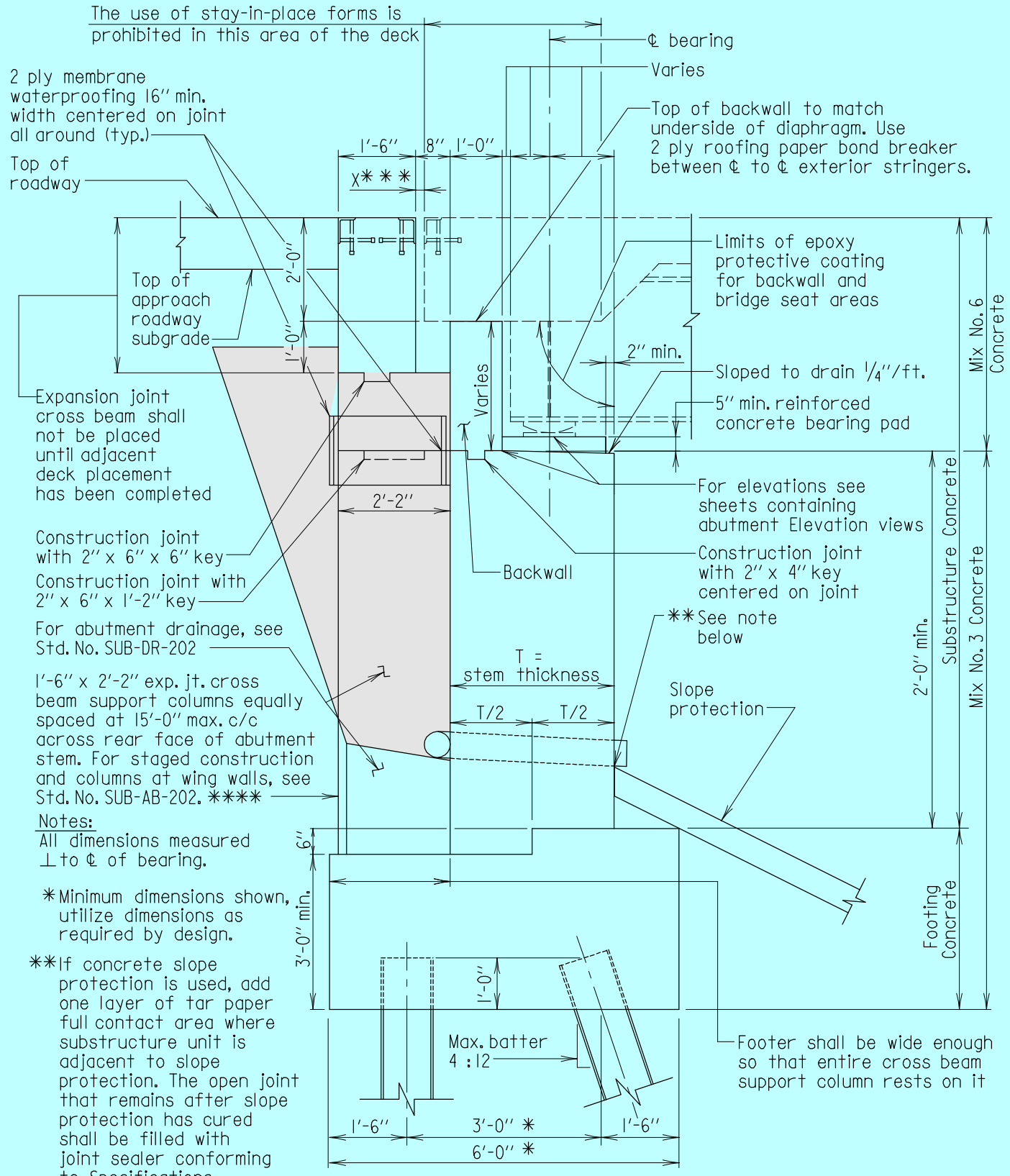

SECTION

Scale: 3/8" = 1'-0"

Notes:

All dimensions measured ⊥ to ℄ of bearing.

* Minimum dimensions shown, utilize dimensions as required by design.

** If concrete slope protection is used, add one layer of tar paper full contact area where substructure unit is adjacent to slope protection. The open joint that remains after slope protection has cured shall be filled with joint sealer conforming to Specifications.

*** X = joint opening dimension see chart on joint seal details.

**** The Contractor has the option to cast the exp. jt. cross beam support column monolithically with the abutment and backwall stem or in a separate pour. No additional compensation will be given for either alternate selected.

* FOR OFFICE USE ONLY *

APPROVAL	
E.S. Freedman DIRECTOR OFFICE OF STRUCTURES	
DATE: 1/17/13	
REVISIONS	
SHA	FHWA
7-24-13	
10-3-13	
FHWA APPROVAL	
DATE:	

STATE OF MARYLAND
DEPARTMENT OF TRANSPORTATION
STATE HIGHWAY ADMINISTRATION
OFFICE OF STRUCTURES

TYPICAL SECTION FOR CANTILEVER ABUTMENTS ON PILES CARRYING STEEL GIRDERS WITH STEEL EXPANSION BEARINGS WITH LENGTH CONTRIBUTING TO EXPANSION > 70 FT.

STANDARD NO. SUB-AB-201 SHEET 1 OF 4

SUBSTRUCTURE - ABUT

OLD NO. BR-SB(6.61)-13-394

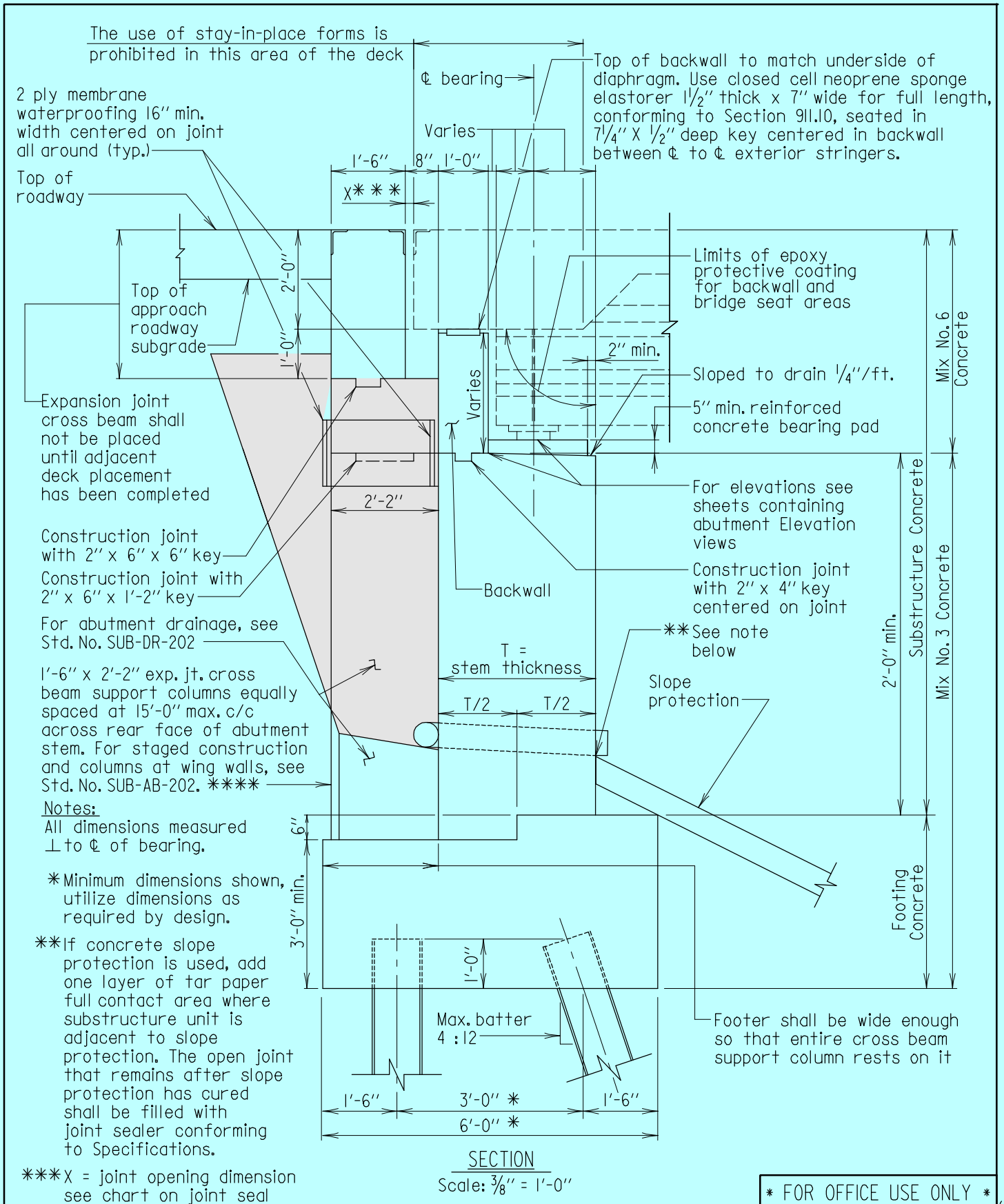

SECTION
Scale: ⅜" = 1'-0"

Notes:
All dimensions measured ⊥ to ℄ of bearing.

* Minimum dimensions shown, utilize dimensions as required by design.

** If concrete slope protection is used, add one layer of tar paper full contact area where substructure unit is adjacent to slope protection. The open joint that remains after slope protection has cured shall be filled with joint sealer conforming to Specifications.

*** X = joint opening dimension see chart on joint seal details.

**** The Contractor has the option to cast the exp. jt. cross beam support column monolithically with the abutment and backwall stem or in a separate pour. No additional compensation will be given for either alternate selected.

* FOR OFFICE USE ONLY *

APPROVAL	
E.S. Freedman DIRECTOR OFFICE OF STRUCTURES DATE: 1/17/13	
REVISIONS	
SHA	FHWA
10-3-13	

FHWA APPROVAL
DATE:

STATE OF MARYLAND
DEPARTMENT OF TRANSPORTATION
STATE HIGHWAY ADMINISTRATION
OFFICE OF STRUCTURES

TYPICAL SECTION FOR CANTILEVER ABUTMENTS ON PILES CARRYING PRESTRESSED CONCRETE GIRDERS WITH ELASTOMERIC EXPANSION BEARINGS WITH LENGTH CONTRIBUTING TO EXPANSION > 70 FT.

STANDARD NO. SUB-AB-201 SHEET 2 OF 4

SUBSTRUCTURE - ABUT

OLD NO. BR-SB(6.61)-13-394

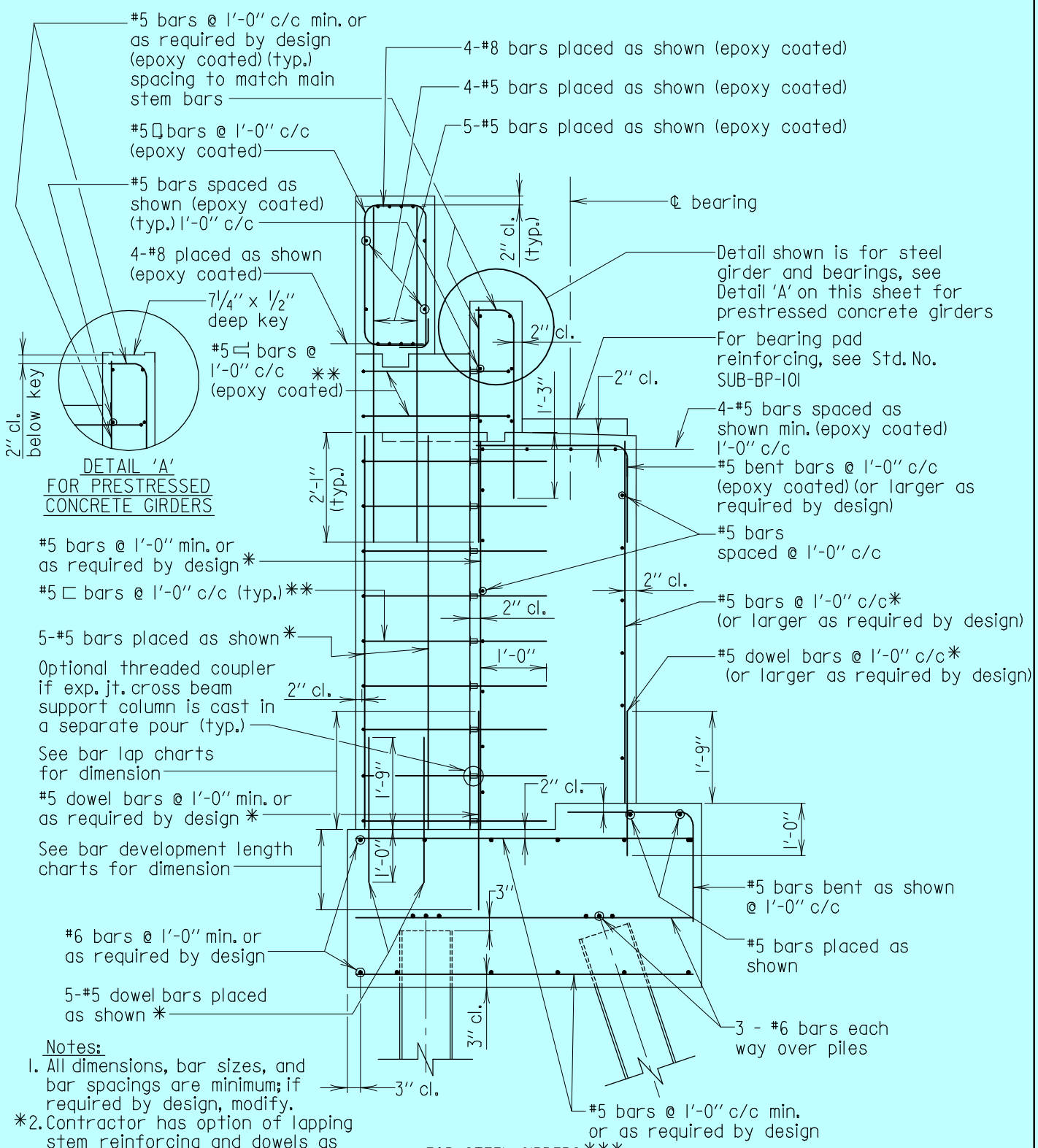

Notes:

1. All dimensions, bar sizes, and bar spacings are minimum; if required by design, modify.
*2. Contractor has option of lapping stem reinforcing and dowels as shown; or extending dowel reinforcement with no splicing. However, no additional compensation to Contractor will be allowed for whichever alternative is selected.
**3. Use straight threaded bars lapped to a ⊏ bar if threaded couplers are used.
***4. For abutment modifications carrying prestressed concrete girders, see Detail 'A'.
5. For exp. jt. cross beam support column see Std. No. SUB-AB-202

* FOR OFFICE USE ONLY *

APPROVAL	
E.S. Freedman DIRECTOR OFFICE OF STRUCTURES DATE: 1/17/13	
REVISIONS	
SHA	FHWA
7-24-13	
10-3-13	
12-4-13	
FHWA APPROVAL DATE:	

STATE OF MARYLAND
DEPARTMENT OF TRANSPORTATION
STATE HIGHWAY ADMINISTRATION
OFFICE OF STRUCTURES

TYPICAL SECTION FOR CANTILEVER ABUTMENTS ON PILES WITH EXPANSION BEARINGS WITH LENGTH CONTRIBUTING TO EXPANSION > 70 FT. REINFORCEMENT DETAILS

STANDARD NO. SUB-AB-201 SHEET 3 OF 4

SUBSTRUCTURE - ABUT

OLD NO. BR-SB(6.61)-13-394

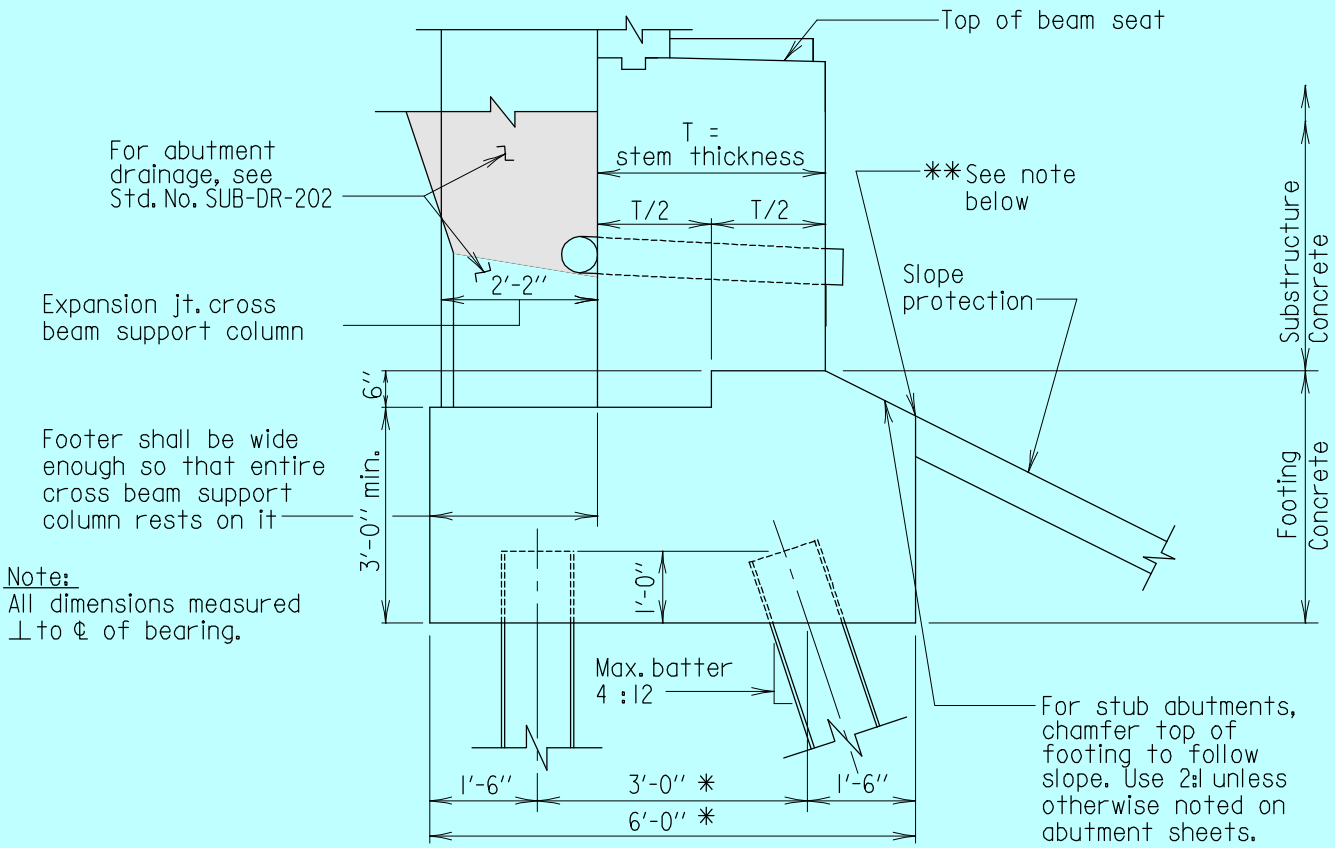

Note:
All dimensions measured ⊥ to ℄ of bearing.

SECTION

Scale: 3/8" = 1'-0"

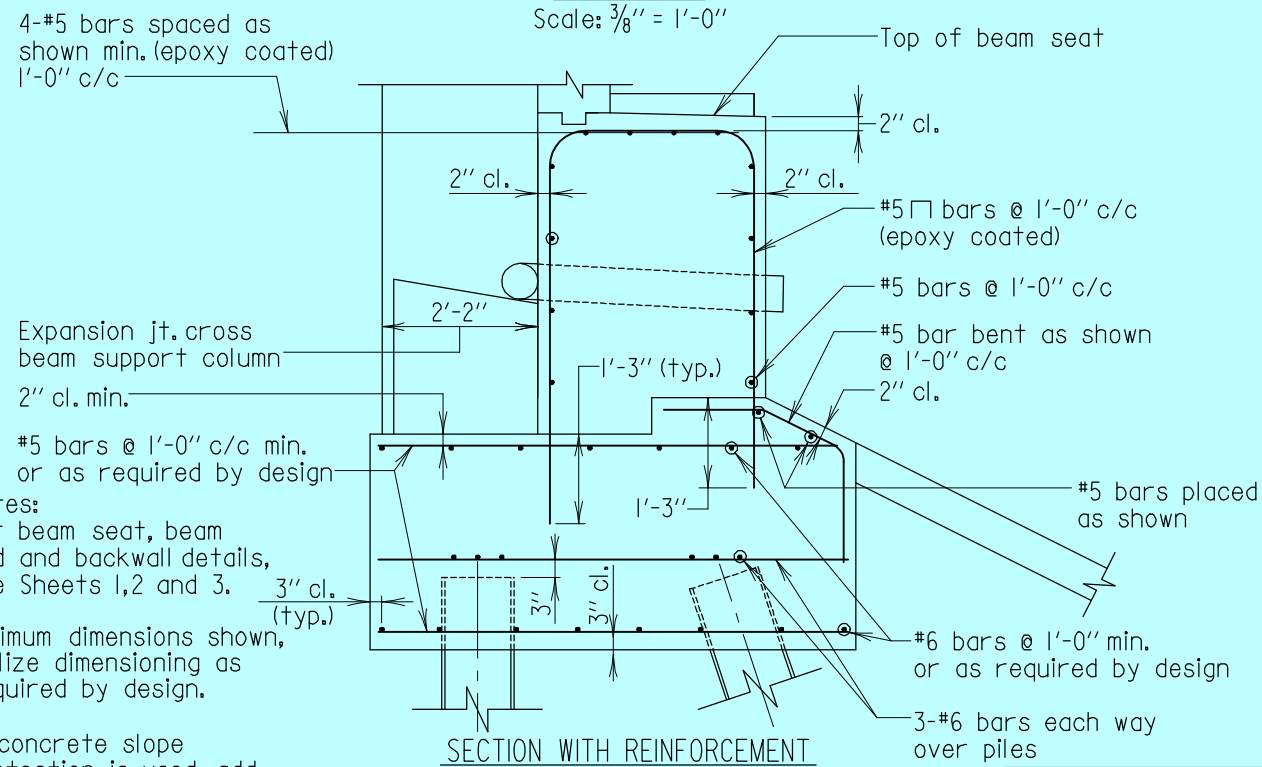

Notes:
For beam seat, beam pad and backwall details, see Sheets 1,2 and 3.

* Minimum dimensions shown, utilize dimensioning as required by design.

** If concrete slope protection is used, add one layer of tar paper full contact area where substructure unit is adjacent to slope protection. The open joint that remains after slope protection has cured shall be filled with joint sealer conforming to Specifications.

SECTION WITH REINFORCEMENT

Scale: 3/8" = 1'-0"

* FOR OFFICE USE ONLY *

APPROVAL
C.S. Freedman DIRECTOR OFFICE OF STRUCTURES
DATE: 1/17/13

REVISIONS	
SHA	FHWA

FHWA APPROVAL
DATE:

STATE OF MARYLAND
DEPARTMENT OF TRANSPORTATION
STATE HIGHWAY ADMINISTRATION
OFFICE OF STRUCTURES

TYPICAL SECTION FOR STUB ABUTMENTS ON PILES WITH EXPANSION BEARINGS WITH LENGTH CONTRIBUTING TO EXPANSION > 70 FT.

STANDARD NO. SUB-AB-201 SHEET 4 OF 4

SUBSTRUCTURE - ABUT

OLD NO. BR-SB(6.61)-13-394

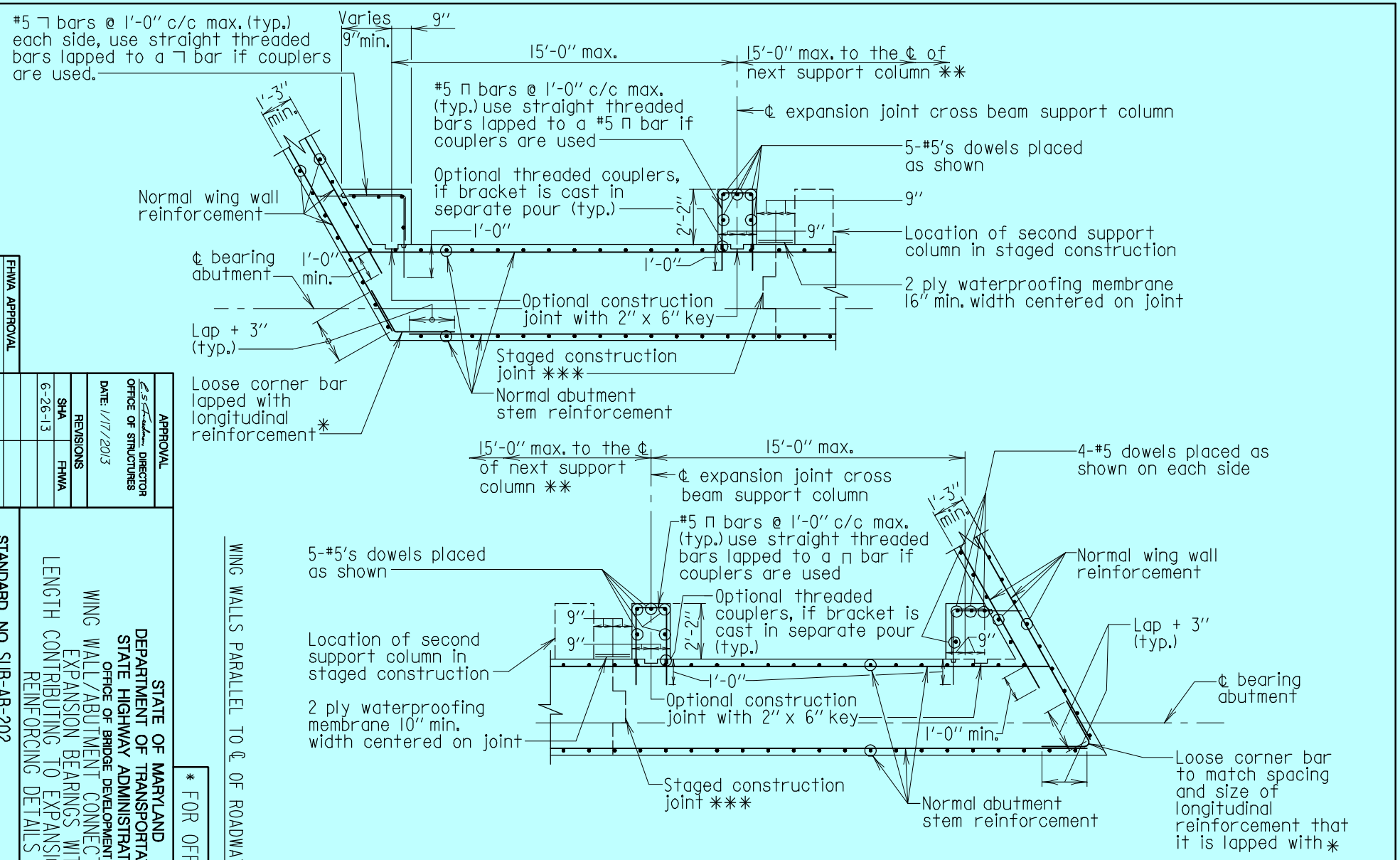

WING WALLS PARALLEL TO ℄ OF ROADWAY

*At the Contractor's option, the loose corner bars may be eliminated provided the longitudinal reinforcing be extended to lap the minimum distance shown on one face. No additional compensation will be given for this option.

SECTION BELOW BEAM SEAT

Scale: 3/16" = 1'-0"

** For staged construction, there shall be 3'-0" c/c spacing between support columns as shown.

*** Orient construction joint so that the key is embedded in the subsequent stage.

* FOR OFFICE USE ONLY *

STATE OF MARYLAND
DEPARTMENT OF TRANSPORTATION
STATE HIGHWAY ADMINISTRATION
OFFICE OF BRIDGE DEVELOPMENT

WING WALL/ABUTMENT CONNECTION FOR EXPANSION BEARINGS WITH LENGTH CONTRIBUTING TO EXPANSION > 70 FT. REINFORCING DETAILS

STANDARD NO. SUB-AB-202

SHEET 1 OF 3

APPROVAL
OFFICE OF STRUCTURES DIRECTOR
DATE: 1/17/2013

REVISIONS

SHA	FHWA
6-26-13	

FHWA APPROVAL
DATE:

* GUIDE SHEET FOR PLAN DEVELOPMENT ONLY - DO NOT INCLUDE THIS SHEET IN CONTRACT PLANS *

OLD NO. BR-SB(6.62)-13-395

SUBSTRUCTURE - ABUT

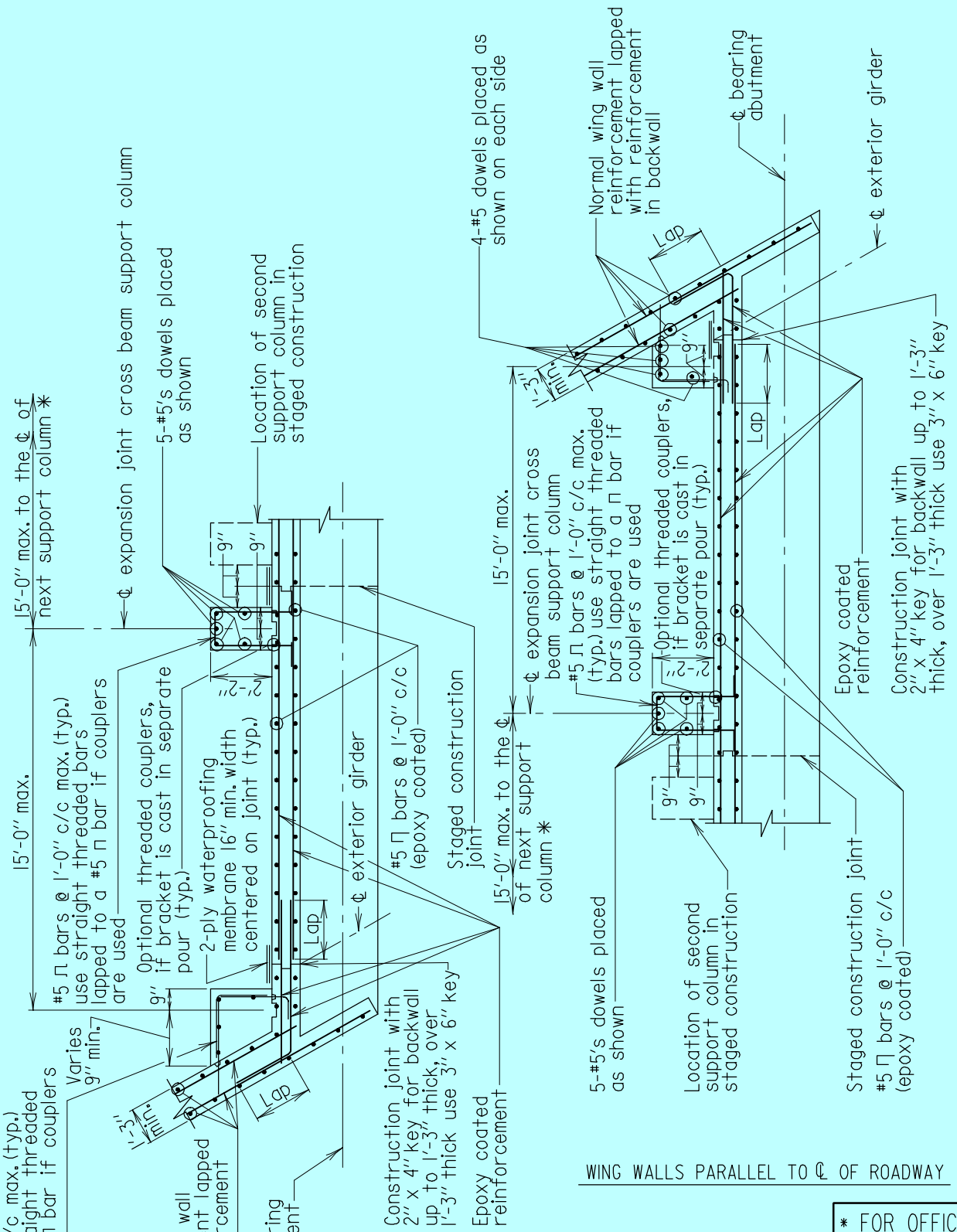

SECTION ABOVE BEAM SEAT

Scale: 3/16" = 1'-0"

WING WALLS PARALLEL TO ℄ OF ROADWAY

* FOR OFFICE USE ONLY *

APPROVAL	
E.S. Freedman DIRECTOR OFFICE OF STRUCTURES	
DATE: 1/17/2013	
REVISIONS	
SHA	FHWA
6-26-13	

FHWA APPROVAL	
DATE:	

STATE OF MARYLAND
DEPARTMENT OF TRANSPORTATION
STATE HIGHWAY ADMINISTRATION
OFFICE OF BRIDGE DEVELOPMENT

WING WALL/ABUTMENT CONNECTION FOR EXPANSION BEARINGS WITH LENGTH CONTRIBUTING TO EXPANSION > 70 FT. REINFORCING DETAILS

STANDARD NO. SUB-AB-202 SHEET 2 OF 3

SUBSTRUCTURE - ABUT

OLD NO. BR-SB(6.62)-13-395

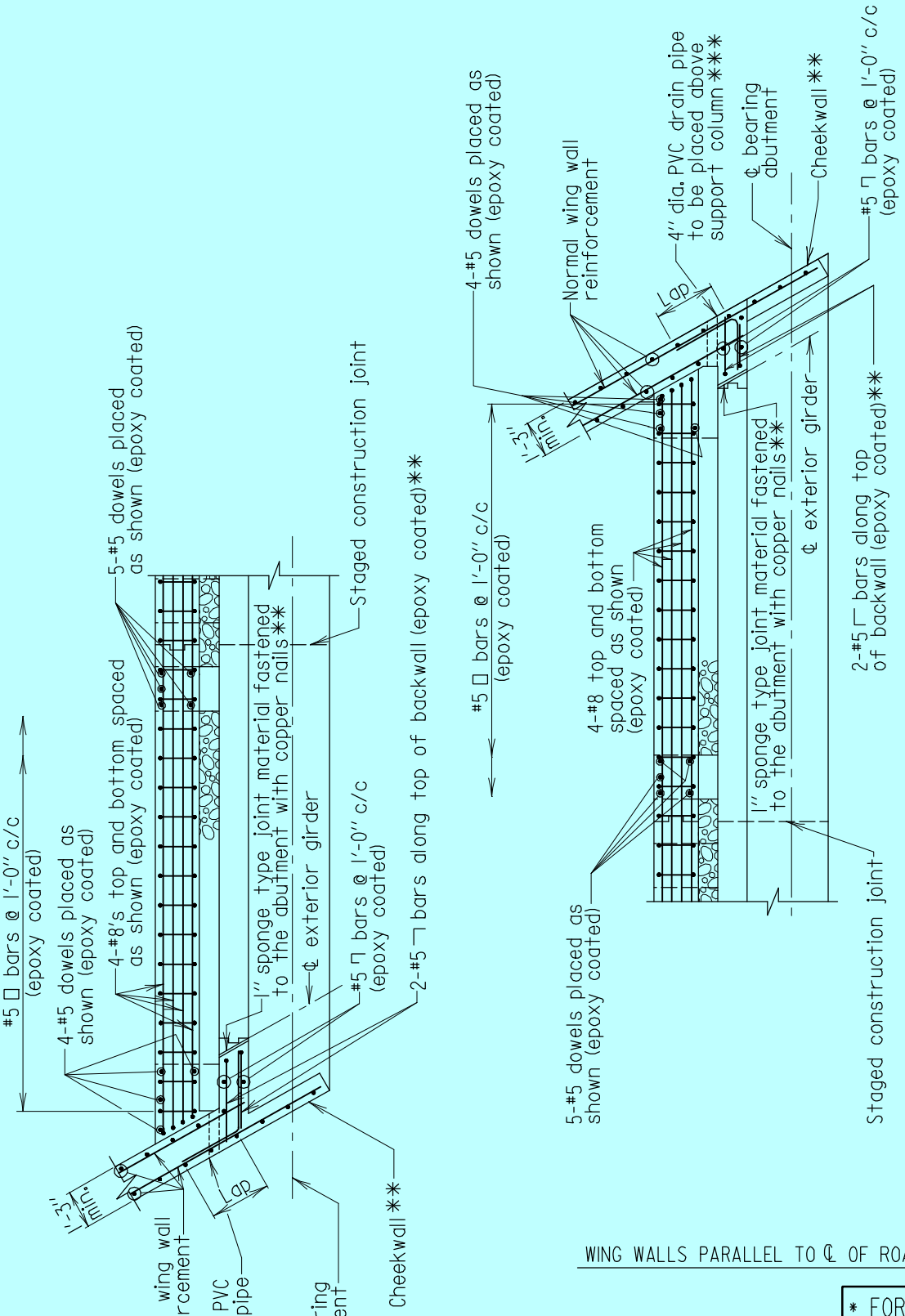

SECTION ABOVE BEAM SEAT THROUGH EXPANSION JOINT CROSS BEAM

Scale: 3/16" = 1'-0"

**For more details, see "Cheek Wall at Bridge Abutment" standard detail.

***Designer shall show this conduit on wing wall elevation sheets.

WING WALLS PARALLEL TO ℄ OF ROADWAY

* FOR OFFICE USE ONLY *

APPROVAL	
C.S. Freedman DIRECTOR OFFICE OF STRUCTURES	
DATE: 1/17/2013	
REVISIONS	
SHA	FHWA

FHWA APPROVAL
DATE:

STATE OF MARYLAND
DEPARTMENT OF TRANSPORTATION
STATE HIGHWAY ADMINISTRATION
OFFICE OF BRIDGE DEVELOPMENT

WING WALL/ABUTMENT CONNECTION FOR EXPANSION BEARINGS WITH LENGTH CONTRIBUTING TO EXPANSION > 70 FT. REINFORCING DETAILS

STANDARD NO. SUB-AB-202

SHEET 3 OF 3

SUBSTRUCTURE ABUT

OLD NO. BR-SB(6.62)-13-395

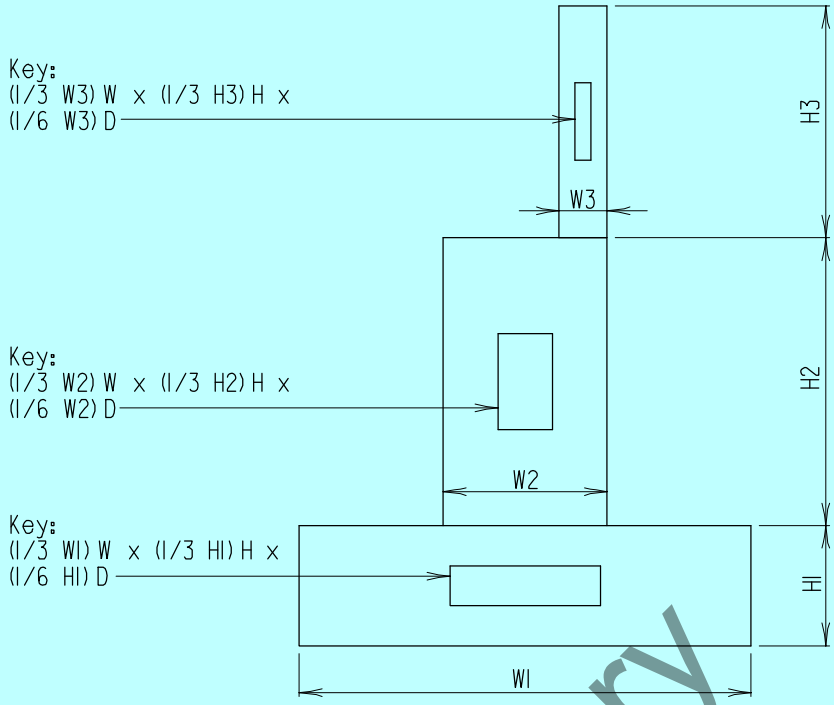

FIXED ABUTMENT

Scale: None

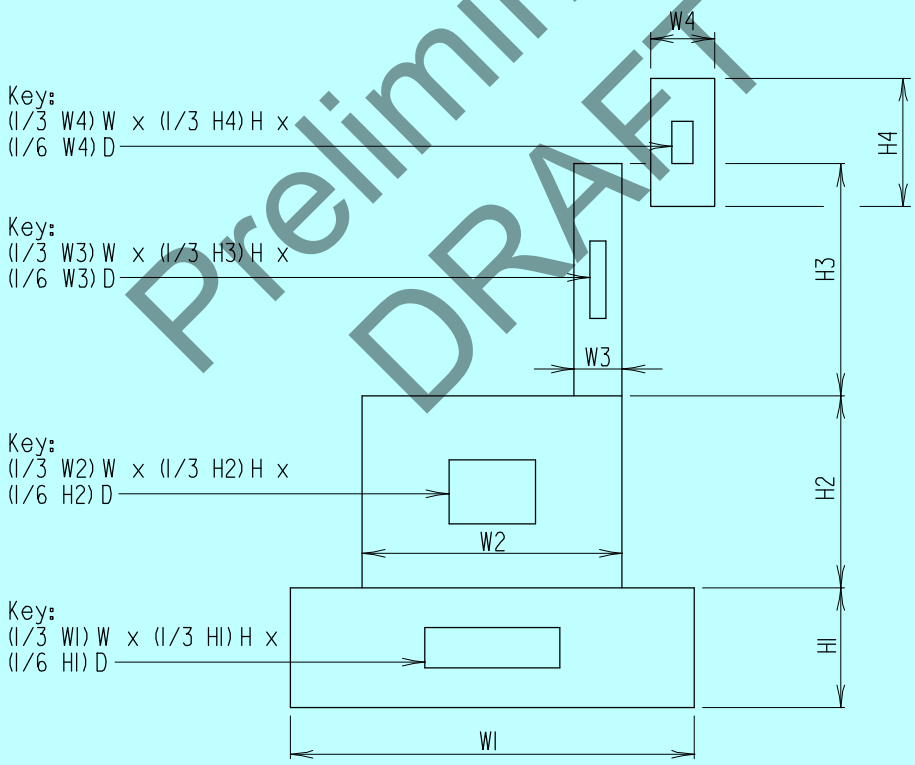

PEDESTAL ABUTMENT (W2 > H2)

Scale: None

Preliminary DRAFT

* PRELIMINARY DRAFT *
FOR OFFICE USE ONLY

APPROVAL	
_____ DEPUTY CHIEF ENGR. BRIDGE DEVEL. DATE:	
REVISIONS	
SHA	FHWA

FHWA APPROVAL
DATE:

STATE OF MARYLAND
DEPARTMENT OF TRANSPORTATION
STATE HIGHWAY ADMINISTRATION
OFFICE OF BRIDGE DEVELOPMENT

KEYWAYS AT CONSTRUCTION JOINTS IN ABUTMENTS

NO. SUB-AB-301

SHEET 1 OF 1

SUBSTRUCTURE - ABUT

SUBSTRUCTURE

WING WALL

(SUB-WW)

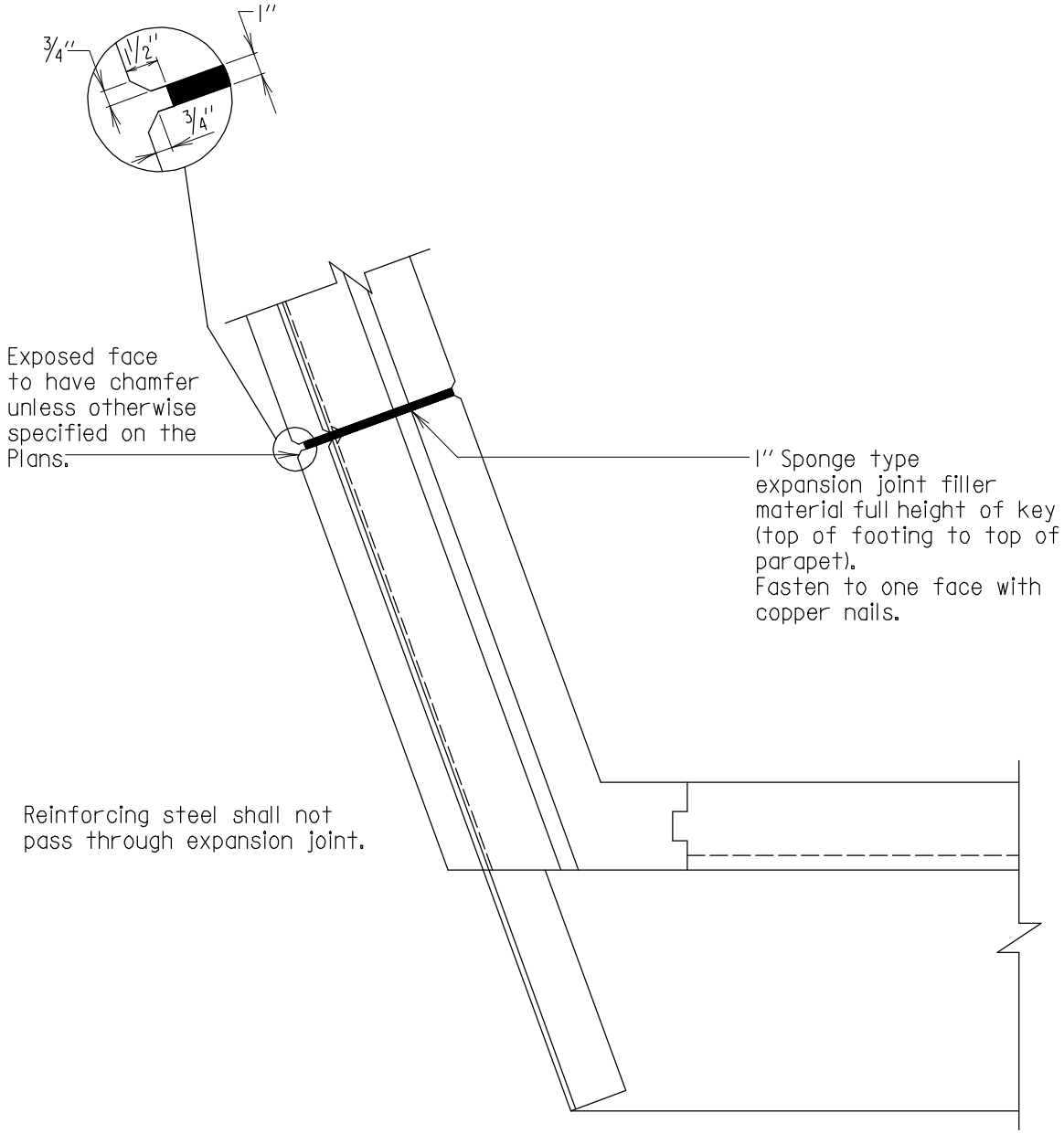

PLAN
(WITHOUT SIDEWALK)
Scale: 1/2'' = 1'-0''

Note:
1. For details not shown see sheet 2 of 3.
2. This joint is required when distance from joint to end of wall is 25' or greater.
3. Material in end post area shall be cut to fit shape of end post.
4. *Slanted lettering indicates notes "For Office Use Only".*
5. *Wing wall expansion joint locations shall be located within a striated panel, or edge of architectural treatment where abutment has this requirement.*

APPROVAL
R.S. Freedman DIRECTOR OFFICE OF STRUCTURES
DATE: 5/26/88

REVISIONS	
SHA	FHWA
8-4-98	
3-22-06	

FHWA APPROVAL		
DATE: 6-8-90		

STATE OF MARYLAND
DEPARTMENT OF TRANSPORTATION
STATE HIGHWAY ADMINISTRATION
OFFICE OF STRUCTURES

STEPPED EXPANSION JOINT FOR WING WALLS AT ABUTMENTS

STANDARD NO. SUB-WW-101 SHEET 1 OF 3

SUBSTRUCTURE - ABUT.

OLD NO. BR-SB(6.18)-88-196

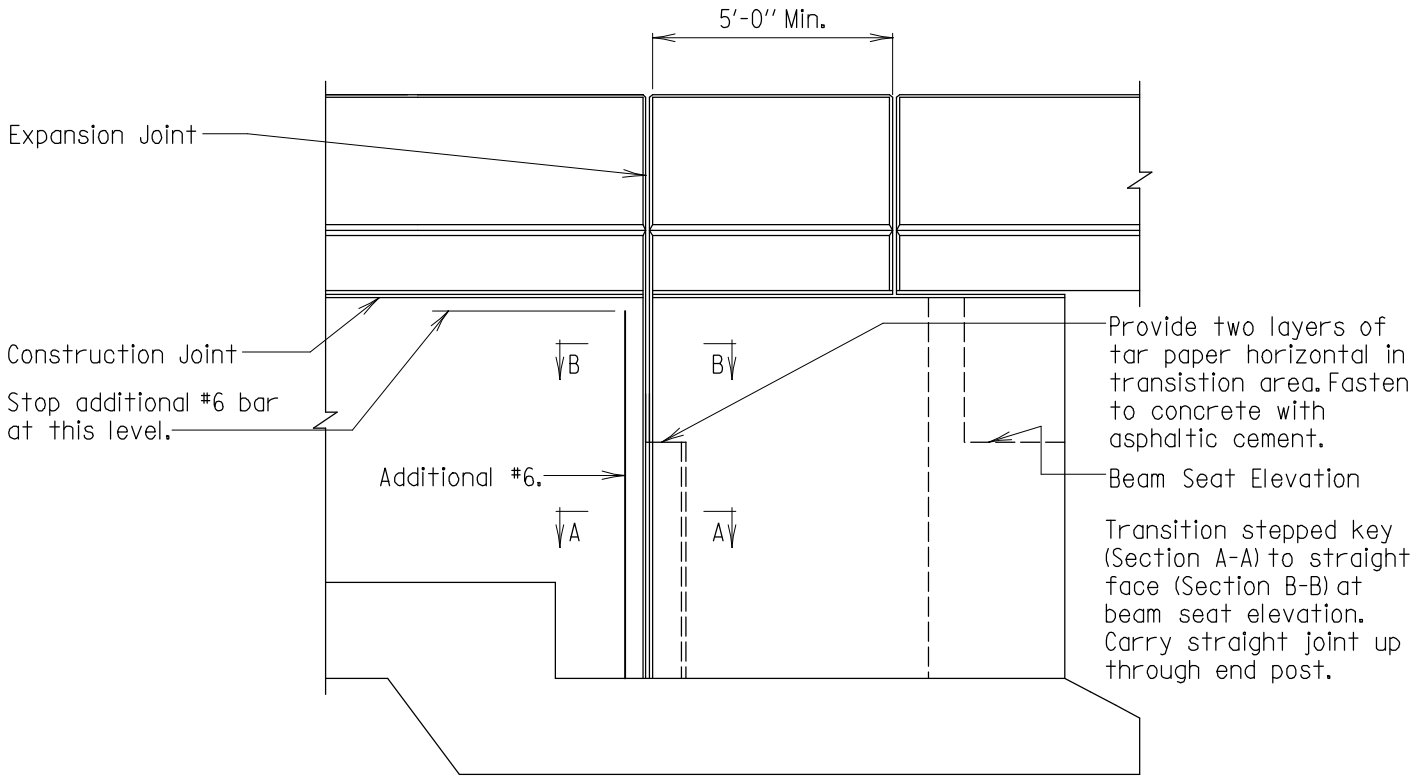

ELEVATION
Scale: 1/4" = 1'-0"

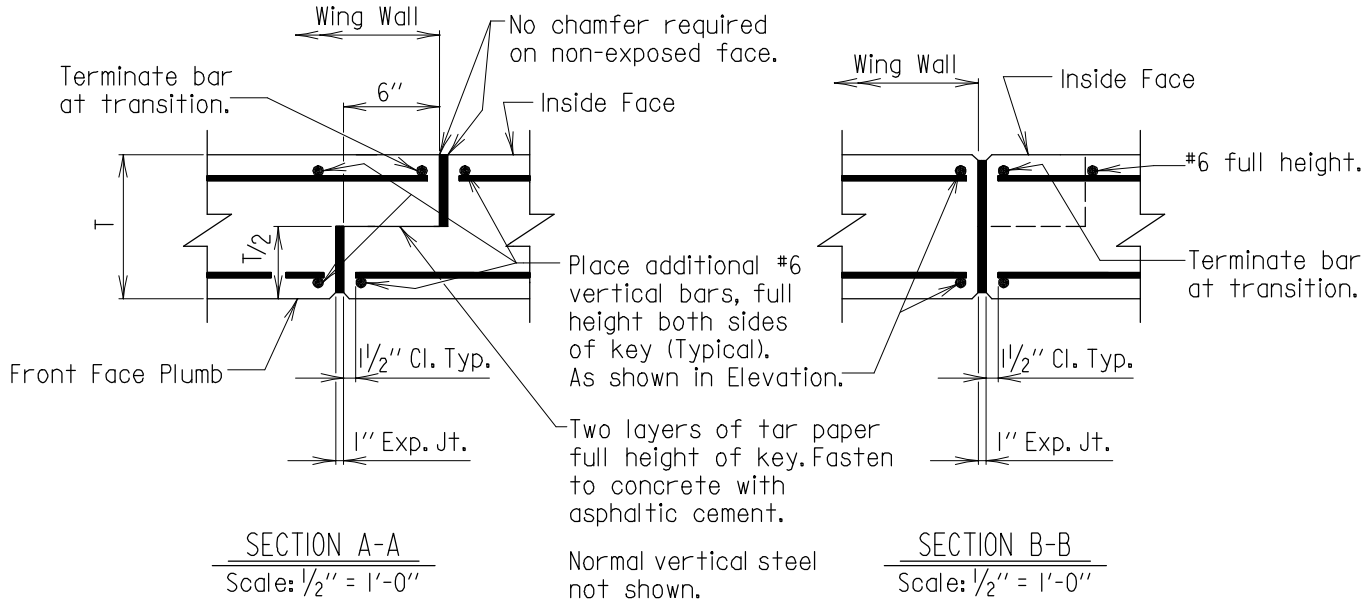

SECTION A-A
Scale: 1/2" = 1'-0"

SECTION B-B
Scale: 1/2" = 1'-0"

APPROVAL		
R.S. Freedman DIRECTOR OFFICE OF STRUCTURES DATE: 5/26/88		
REVISIONS		
SHA	FHWA	
1-7-93		
3-3-94		
11-17-97		
9-3-13		

FHWA APPROVAL
DATE: 6-8-90

STATE OF MARYLAND
DEPARTMENT OF TRANSPORTATION
STATE HIGHWAY ADMINISTRATION
OFFICE OF STRUCTURES

STEPPED EXPANSION JOINT FOR WING WALLS AT ABUTMENTS

STANDARD NO. SUB-WW-101 SHEET 2 OF 3

SUBSTRUCTURE - ABUT.

OLD NO. BR-SB(6.18)-88-196

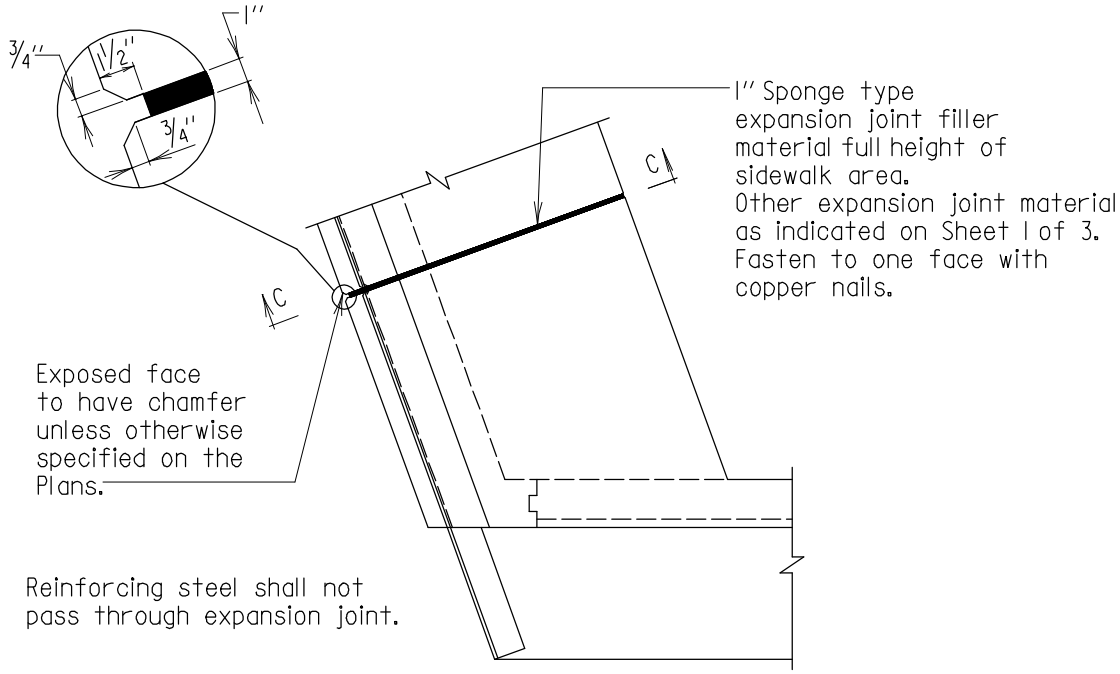

PLAN
(WITH SIDEWALK)
Scale: 1/4" = 1'-0"

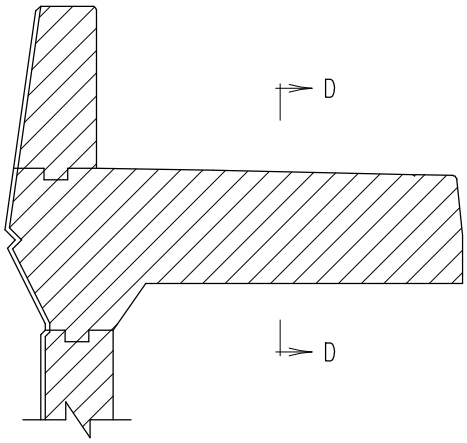

SECTION C-C
Scale: 3/8" = 1'-0"

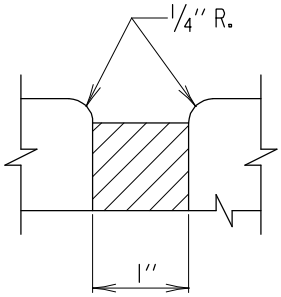

SECTION D-D
Scale: 1/2" = 1"

See notes on Sheet 1 of 3.

APPROVAL		
E.S. Friedman DIRECTOR OFFICE OF STRUCTURES DATE: 5/26/88		
REVISIONS		
SHA	FHWA	
8-4-98		
3-22-06		
FHWA APPROVAL		
DATE:		

STATE OF MARYLAND
DEPARTMENT OF TRANSPORTATION
STATE HIGHWAY ADMINISTRATION
OFFICE OF STRUCTURES

STEPPED EXPANSION JOINT FOR WING WALLS AT ABUTMENTS

STANDARD NO. SUB-WW-101 SHEET 3 OF 3

SUBSTRUCTURE - ABUT.

OLD NO. BR-SB(6.18)-88-196

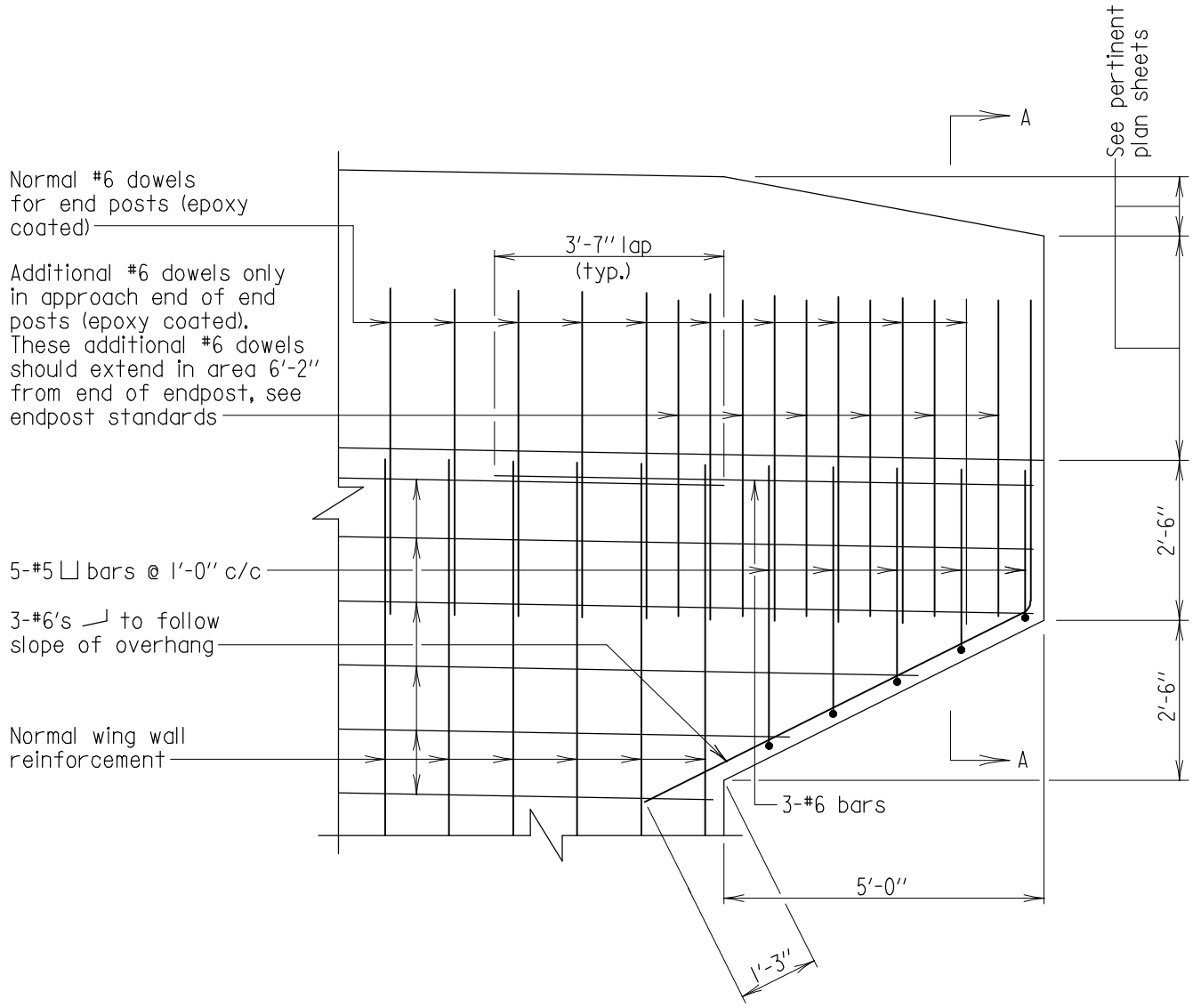

ELEVATION

Scale: 3/8" = 1'-0"

Note:
For endpost configuration, refer to wing wall and endpost plans.

Note:
For Section A-A see sheet nos. 2 & 3 of 3.

Notes to Designer:

1. *For bridges without a median barrier, use the approach end detail on all 4 end posts.*
2. *Use cantilever section when distance from top of roadway to top of wing wall footing exceeds 10 ft.*

APPROVAL	
E.S. Freedman DIRECTOR OFFICE OF STRUCTURES DATE: 1/17/2013	
REVISIONS	
SHA	FHWA

FHWA APPROVAL
DATE:

STATE OF MARYLAND
DEPARTMENT OF TRANSPORTATION
STATE HIGHWAY ADMINISTRATION
OFFICE OF STRUCTURES

TYPICAL WING WALL CANTILEVER AT END OF END POST REINFORCEMENT DETAILS

STANDARD NO. SUB-WW-201 SHEET 1 OF 3

SUBSTRUCTURE - ABUT.

OLD NO. BR-SB(6.64)-13-397

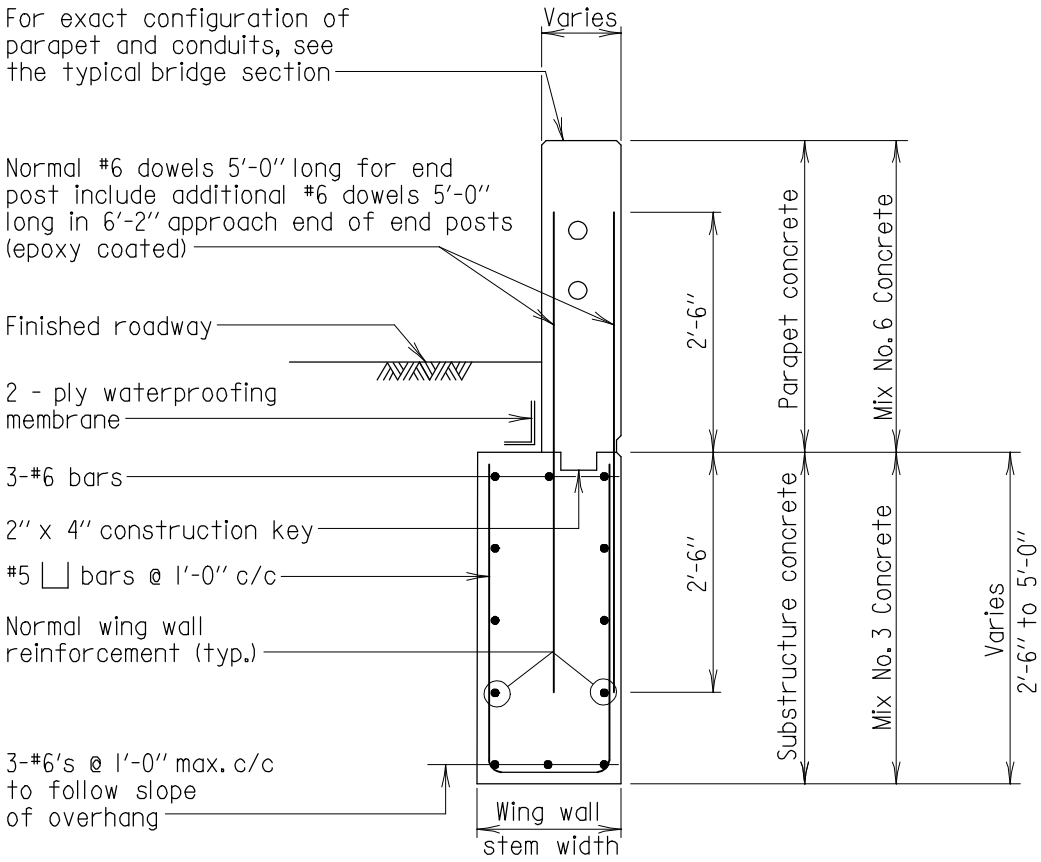

SECTION A-A - APPROACH END

Scale: 1/2" = 1'-0"

Note:
For endpost configuration, refer to wing wall and endpost plans.

APPROVAL	
E.S. Freedman DIRECTOR OFFICE OF STRUCTURES	
DATE: 1/17/2013	
REVISIONS	
SHA	FHWA
FHWA APPROVAL	
DATE:	

STATE OF MARYLAND
DEPARTMENT OF TRANSPORTATION
STATE HIGHWAY ADMINISTRATION
OFFICE OF STRUCTURES

TYPICAL WING WALL CANTILEVER AT END OF END POST REINFORCEMENT DETAILS

STANDARD NO. SUB-WW-201 SHEET 2 OF 3

SUBSTRUCTURE - ABUT.

OLD NO. BR-SB(6.64)-13-397

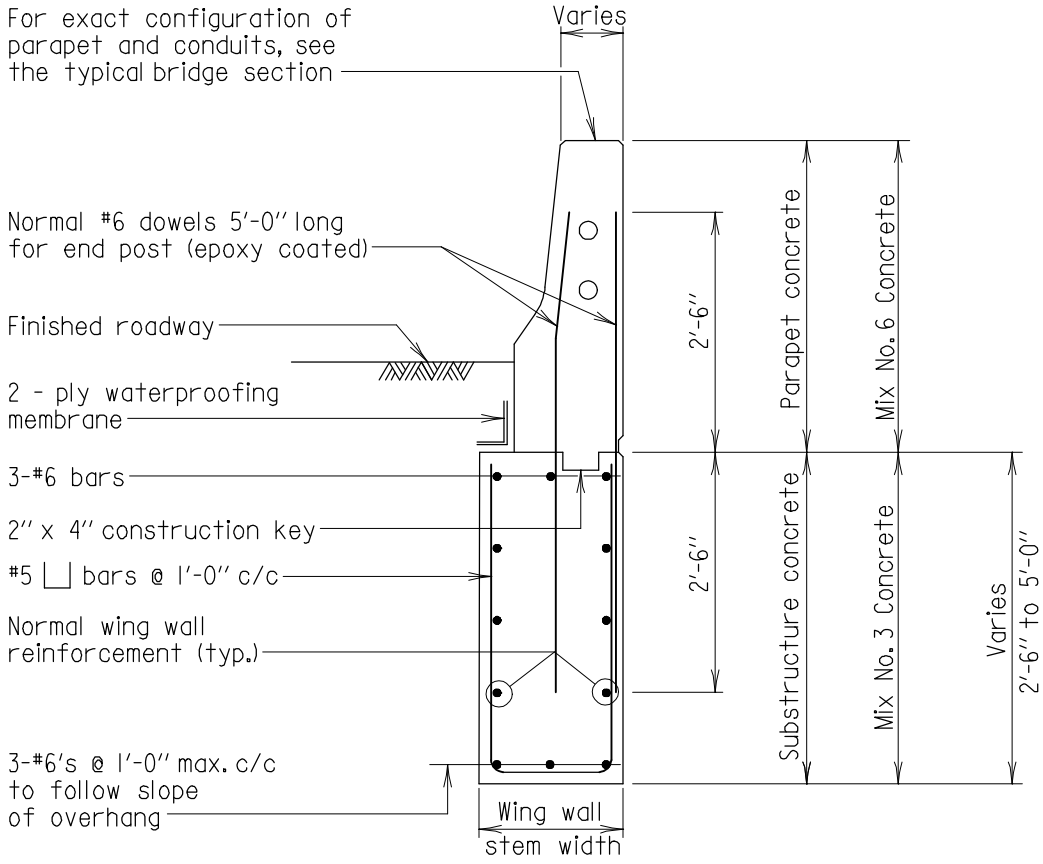

SECTION A-A - TRAIL END

Scale: 1/2" = 1'-0"

Note:
For endpost configuration, refer to wing wall and endpost plans.

APPROVAL	
R.S. Freedman DIRECTOR OFFICE OF STRUCTURES DATE: 1/17/2013	
REVISIONS	
SHA	FHWA
FHWA APPROVAL	
DATE:	

STATE OF MARYLAND
DEPARTMENT OF TRANSPORTATION
STATE HIGHWAY ADMINISTRATION
OFFICE OF STRUCTURES

TYPICAL WING WALL CANTILEVER AT END OF END POST REINFORCEMENT DETAILS

STANDARD NO. SUB-WW-201 SHEET 3 OF 3

SUBSTRUCTURE - ABUT.

OLD NO. BR-SB(6.64)-13-397

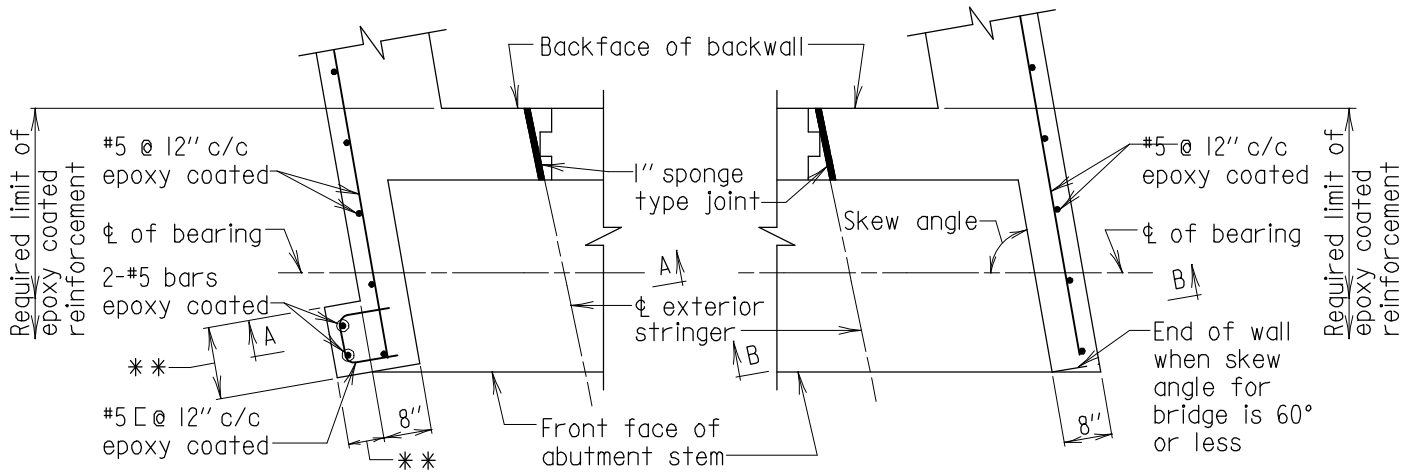

WITH COPING

WITHOUT COPING

PLAN

Scale: 3/8" = 1'-0"

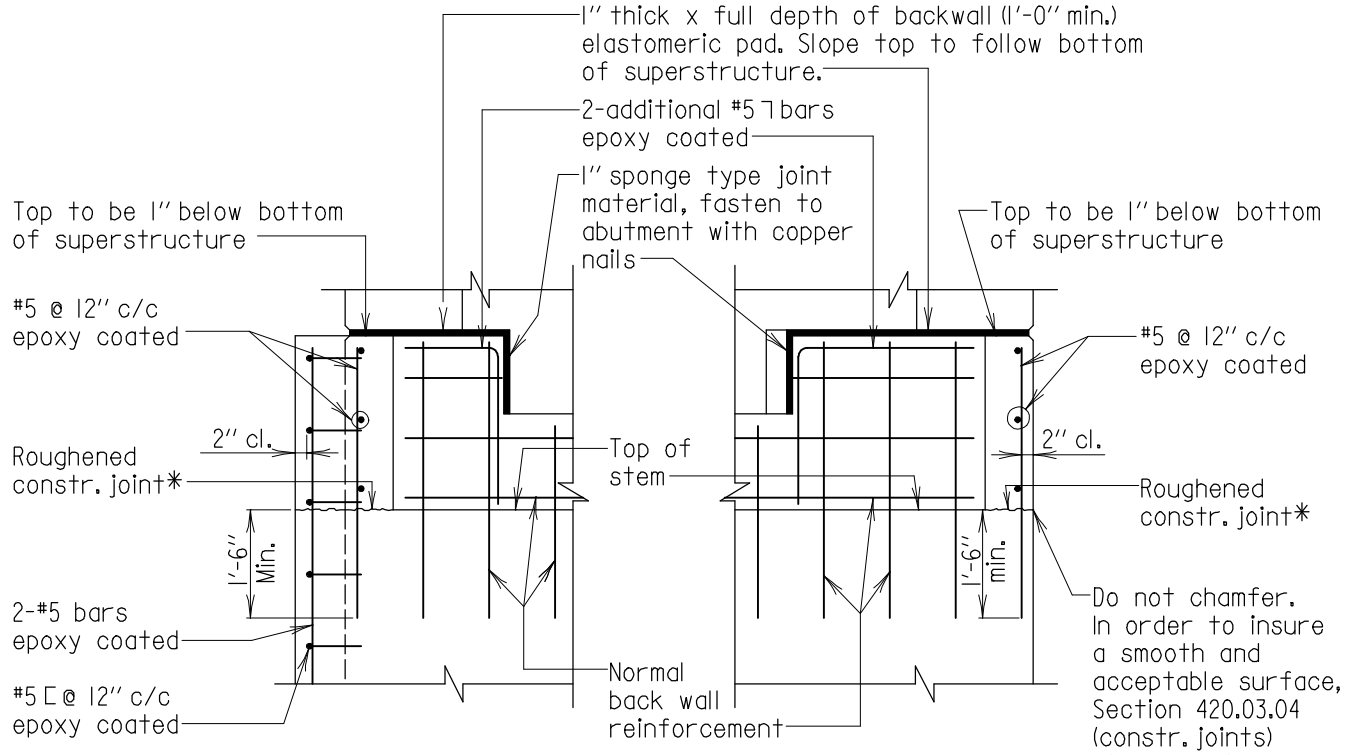

SECTION A-A

Scale: 3/8" = 1'-0"

SECTION B-B

Scale: 3/8" = 1'-0"

Note:

* If formliners or other aesthetic treatment is used on the outside face of the cheekwall, the cheekwall shall be cast monolithically with the abutment stem.

** For location and size of coping and size of cheekwall see Plans.

APPROVAL	
E.S. Freedman DIRECTOR OFFICE OF STRUCTURES DATE: 11/13/85	
REVISIONS	
SHA	FHWA
1-4-94	
8-4-98	
1-22-01	
3-29-12	

FHWA APPROVAL
DATE: 6-8-90

STATE OF MARYLAND
DEPARTMENT OF TRANSPORTATION
STATE HIGHWAY ADMINISTRATION
OFFICE OF STRUCTURES

CHEEK WALL AT BRIDGE ABUTMENT WITH FIXED BEARINGS OR EXPANSION BEARINGS WITH LENGTH CONTRIBUTING TO EXPANSION ≤ 70 FT.

STANDARD NO. SUB-WW-301 SHEET 1 OF 1

SUBSTRUCTURE - ABUT.

OLD NO. BR-SB(6.10)-85-176A

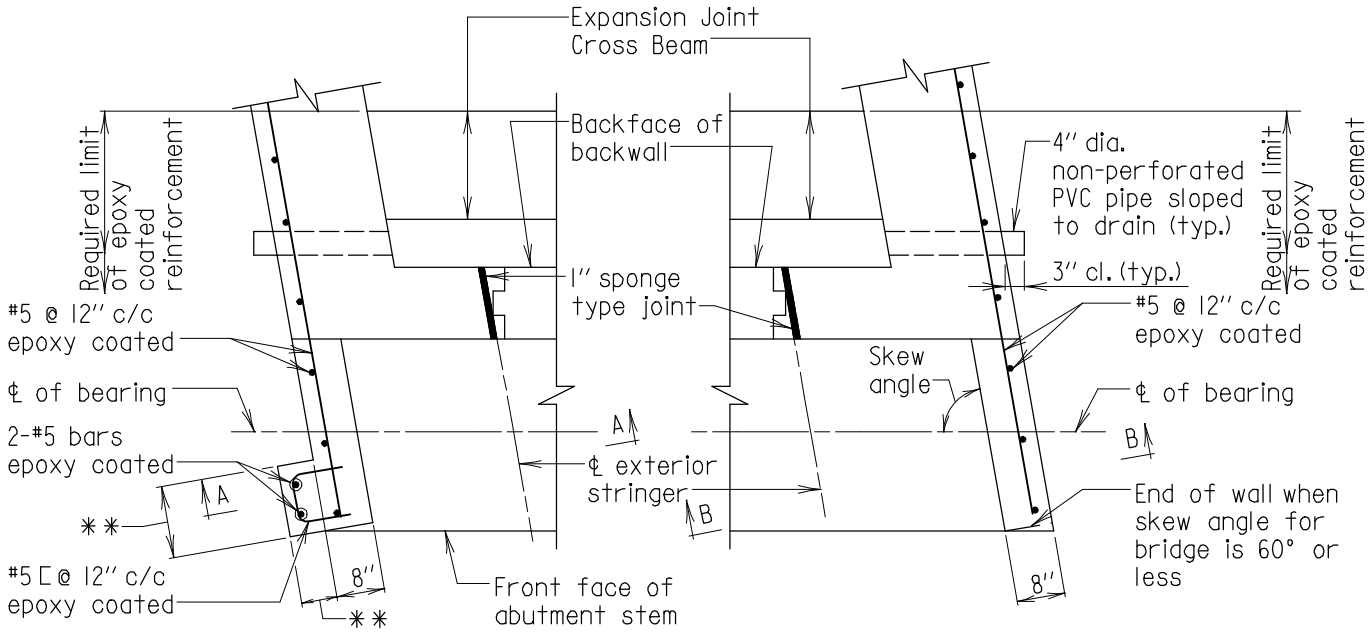

PLAN

Scale: 3/8" = 1'-0"

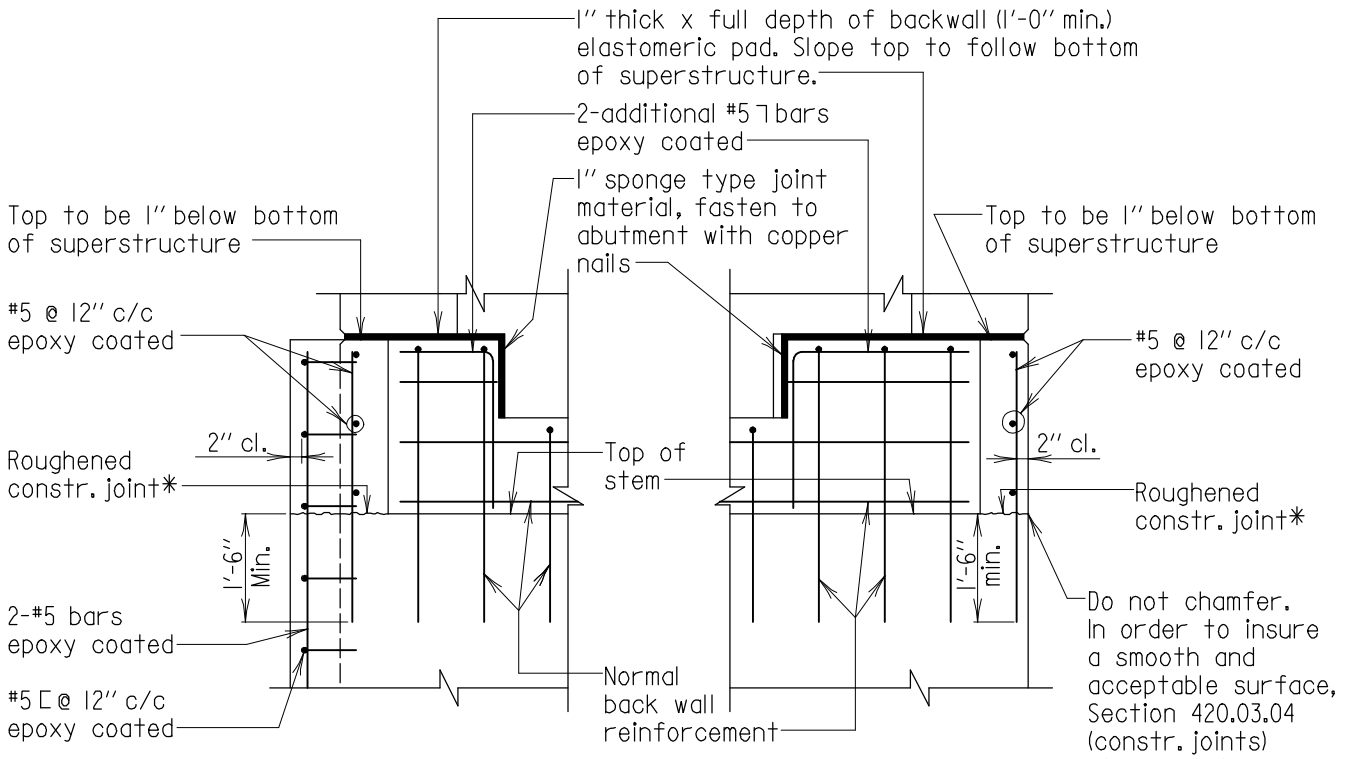

SECTION A-A

Scale: 3/8" = 1'-0"

SECTION B-B

Scale: 3/8" = 1'-0"

Note:

* If formliners or other aesthetic treatment is used on the outside face of the cheekwall, the cheekwall shall be cast monolithically with the abutment stem.

** For location and size of coping and size of cheekwall see Plans.

APPROVAL	
R.S. Freedman DIRECTOR OFFICE OF STRUCTURES	
DATE: 3/29/12	
REVISIONS	
SHA	FHWA
FHWA APPROVAL	
DATE:	

STATE OF MARYLAND
DEPARTMENT OF TRANSPORTATION
STATE HIGHWAY ADMINISTRATION
OFFICE OF STRUCTURES

CHEEK WALL AT BRIDGE ABUTMENT WITH EXPANSION BEARINGS WITH LENGTH CONTRIBUTING TO EXPANSION > 70 FT.

STANDARD NO. SUB-WW-401 SHEET 1 OF 1

SUBSTRUCTURE - ABUT.

OLD NO. BR-SB(6.10)-85-176B

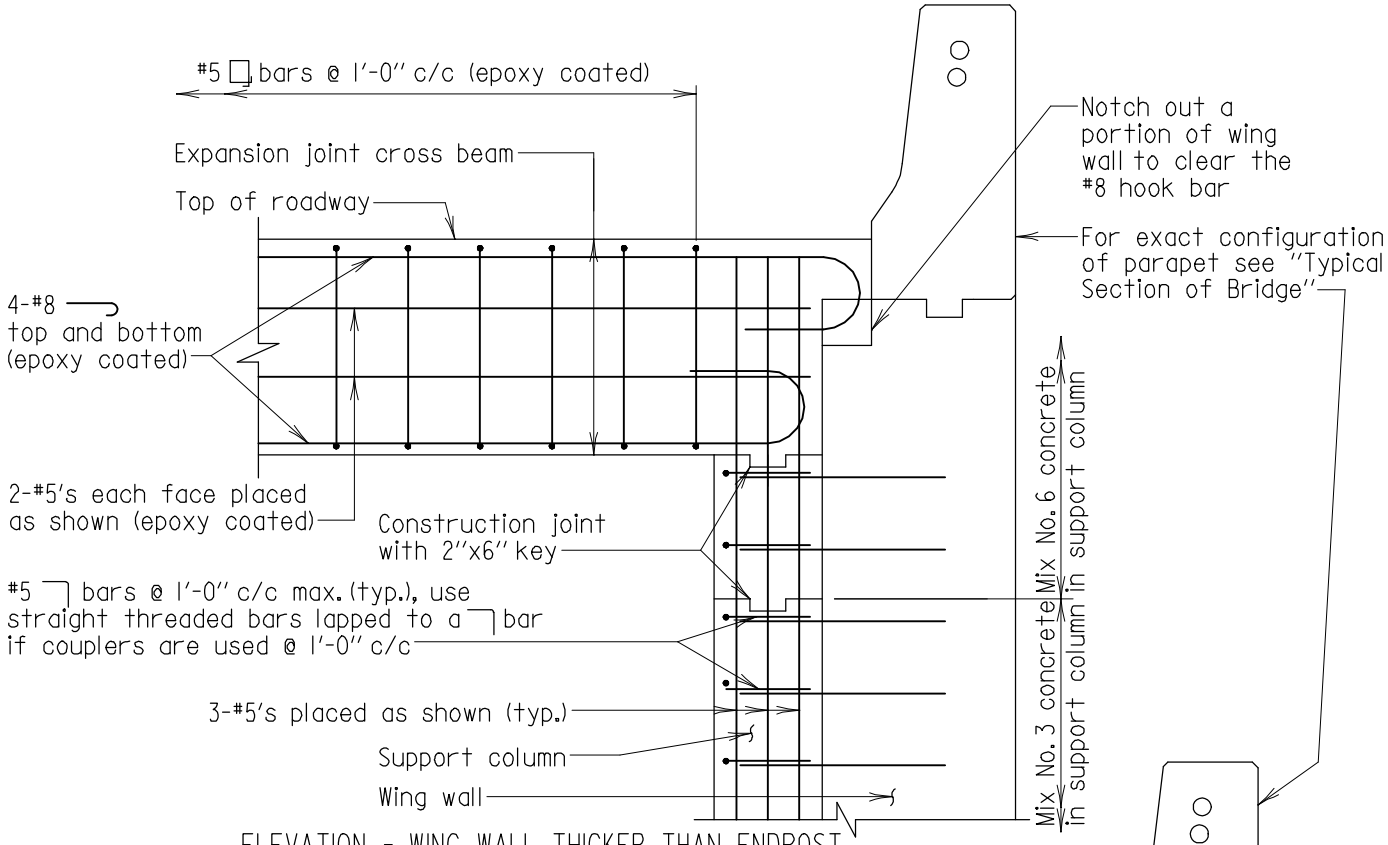

ELEVATION - WING WALL THICKER THAN ENDPOST

Scale: 3/8" = 1'-0"

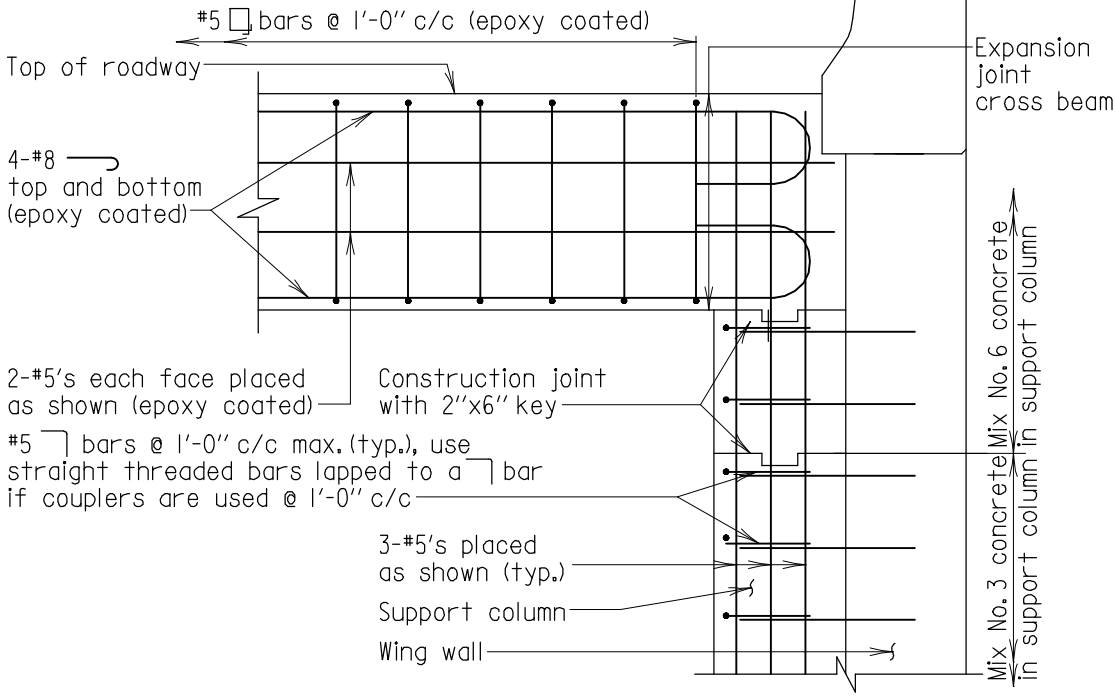

ELEVATION - WING WALL THINNER THAN ENDPOST

Scale: 3/8" = 1'-0"

Note:
Reinforcing bars in wing wall and parapet are not shown for clarity.

APPROVAL		
E.S. Freedman DIRECTOR OFFICE OF STRUCTURES DATE: 1/17/2013		
REVISIONS		
SHA	FHWA	
11-15-13		
FHWA APPROVAL		
DATE:		

STATE OF MARYLAND
DEPARTMENT OF TRANSPORTATION
STATE HIGHWAY ADMINISTRATION
OFFICE OF STRUCTURES

EXPANSION JOINT CROSS BEAM
CONNECTION AT WING WALLS
PARALLEL TO CENTER LINE OF ROADWAY

STANDARD NO. SUB-WW-402 SHEET 1 OF 1

SUBSTRUCTURE - ABUT.

OLD NO. BR-SB(6.63)-13-396

SUBSTRUCTURE

PIER

(SUB-PR)

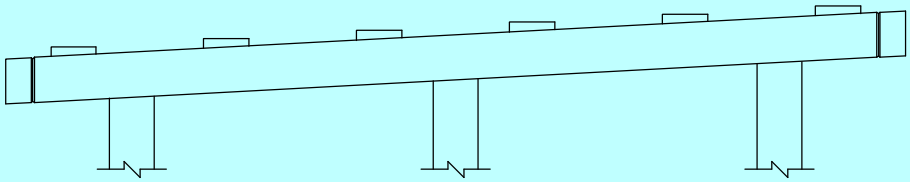

ALTERNATE CAP DETAIL
Scale: 3/32 " = 1'-0"

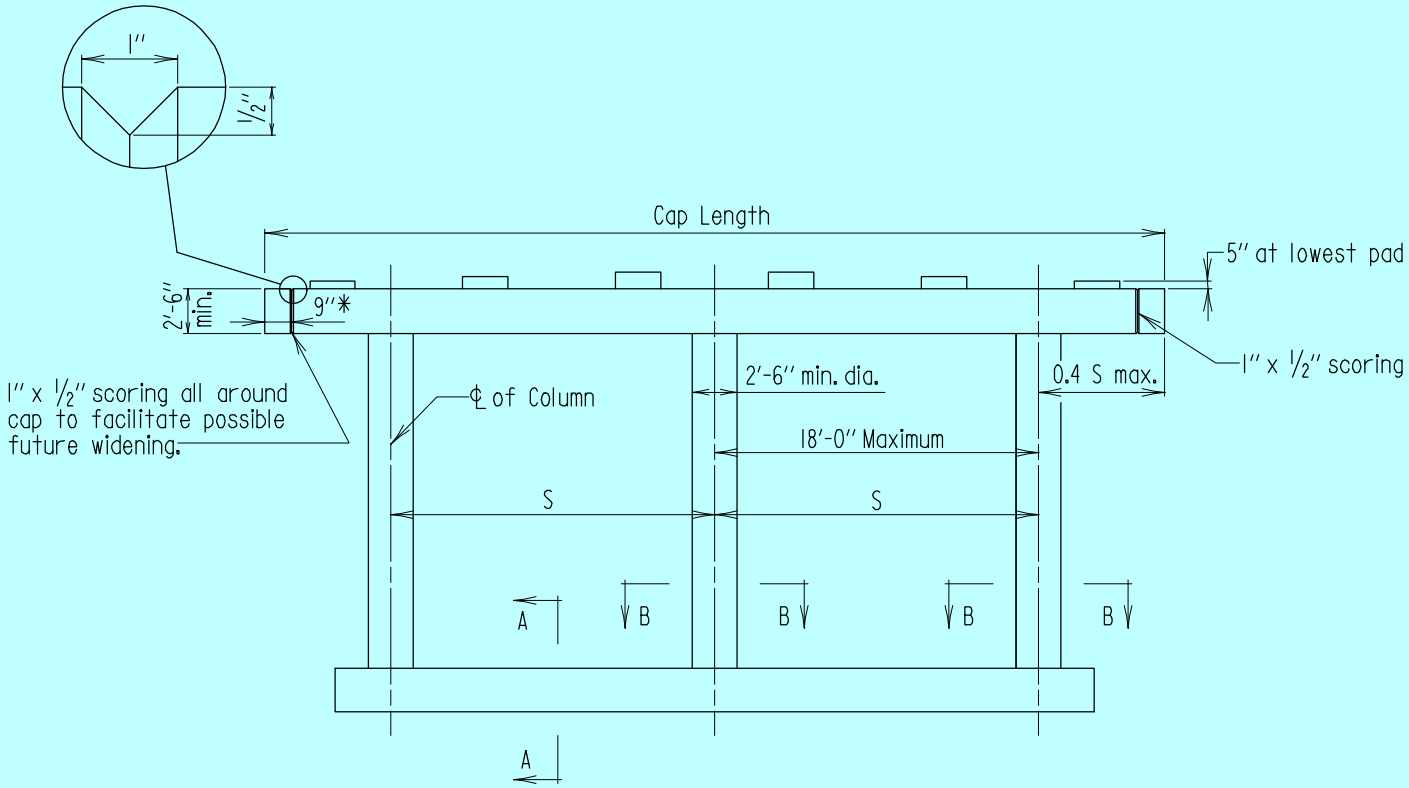

ELEVATION
Scale: 3/32 " = 1'-0"

* All main bars to be extended into this area so that the welded extension indicated on REBAR-ER-101 can be utilized. Designer must keep in mind this might necessitate more steel than required for original design.

Note:
1. Standard is for roadway widths and skew angle requiring a cap length less than 50', measured along center line of pier.
2. When bridge seat elevations are such that the height of any pad becomes greater than 1'-0" and the sloping of cap can eliminate or alleviate this condition then cap shall be sloped as indicated in "Alternate Cap Detail".
3. For Section A-A and B-B see sheet 4 of 4.

* FOR OFFICE USE ONLY *

APPROVAL	
E.S. Freedman DIRECTOR OFFICE OF STRUCTURES	
DATE: 10/2/81	
REVISIONS	
SHA	FHWA
8-10-82	
1-11-88	
1-22-01	
7-26-06	

FHWA APPROVAL	
DATE:	

STATE OF MARYLAND
DEPARTMENT OF TRANSPORTATION
STATE HIGHWAY ADMINISTRATION
OFFICE OF STRUCTURS

DESIGN CRITERIA FOR
TYPICAL REINFORCED CONCRETE PIER
(CAP LENGTH LESS THAN 50')

STANDARD NO. SUB-PR-101 SHEET 1 OF 4

SUBSTRUCTURE - PIER

OLD NO. BR-SB(2.01)-81-125

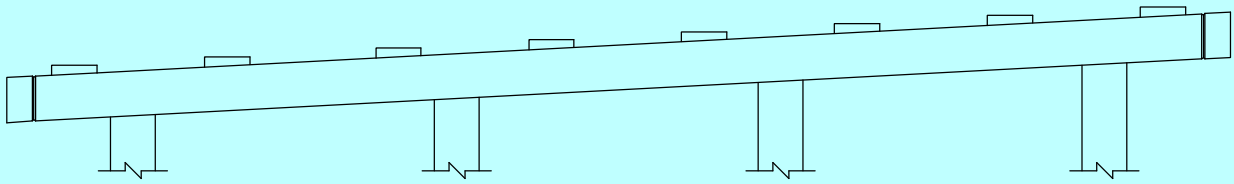

ALTERNATE CAP DETAIL
Scale: 3/32 " = 1'-0"

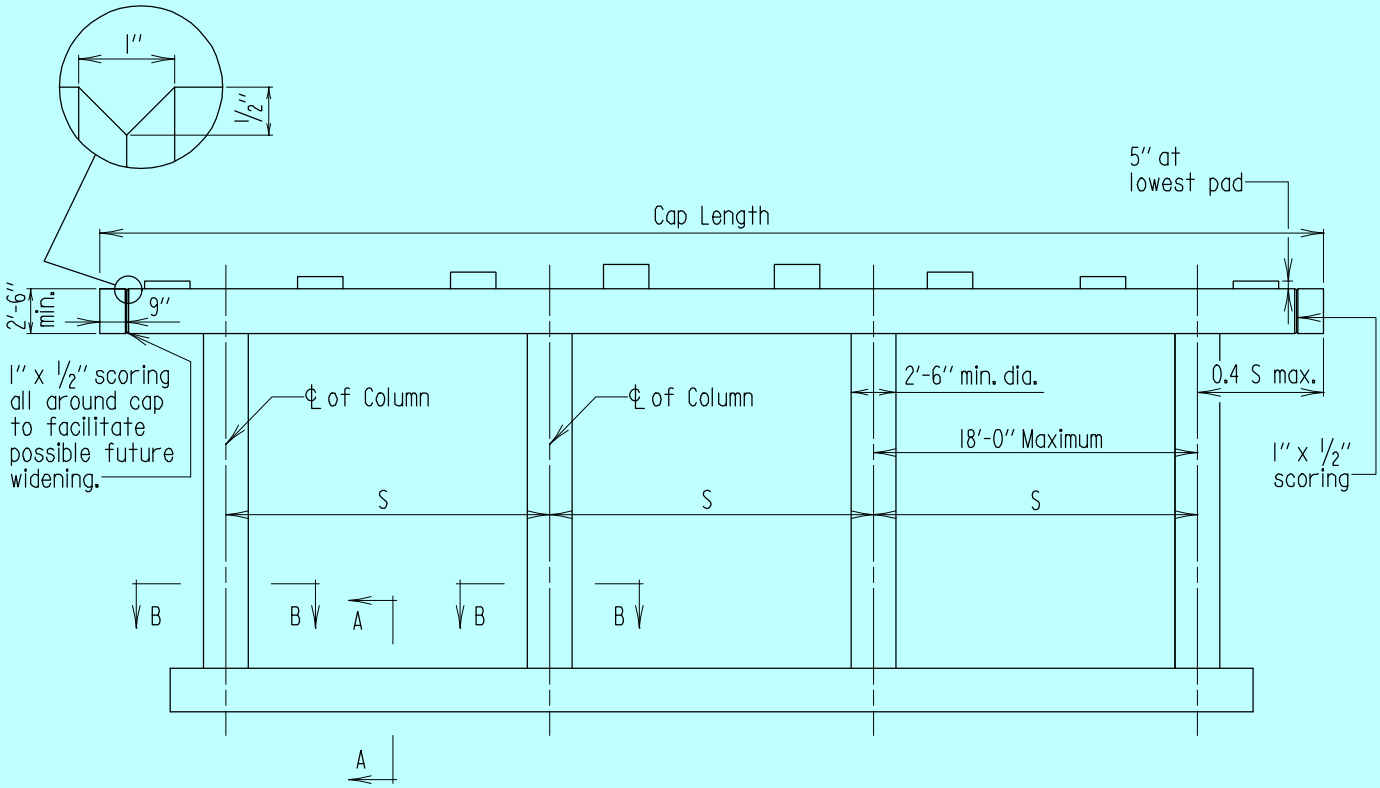

ELEVATION
Scale: 3/32 " = 1'-0"

* All main bars to be extended into this area so that the welded extension indicated on REBAR-ER-101 can be utilized. Designer must keep in mind this might necessitate more steel than required for original design.

Note:
1. Standard is for roadway widths and skew angle requiring a cap length between 50' and 68', measured along center line of pier.
2. When bridge seat elevations are such that the height of any pad becomes greater than 1'-0" and the sloping of cap can eliminate or alleviate this condition then cap shall be sloped as indicated in "Alternate Cap Detail".
3. For Section A-A and B-B see sheet 4 of 4.

* FOR OFFICE USE ONLY *

APPROVAL	
R.S. Freedman DIRECTOR OFFICE OF STRUCTURES	
DATE: 10/2/81	
REVISIONS	
SHA	FHWA
8-10-82	
1-11-88	
1-22-01	
7-26-06	
FHWA APPROVAL	
DATE:	

STATE OF MARYLAND
DEPARTMENT OF TRANSPORTATION
STATE HIGHWAY ADMINISTRATION
OFFICE OF STRUCTURES

DESIGN CRITERIA FOR
TYPICAL REINFORCED CONCRETE PIER
(CAP LENGTH 50' - 68')

STANDARD NO. SUB-PR-101 SHEET 2 OF 4

SUBSTRUCTURE - PIER

OLD NO. BR-SB(2.01)-81-125

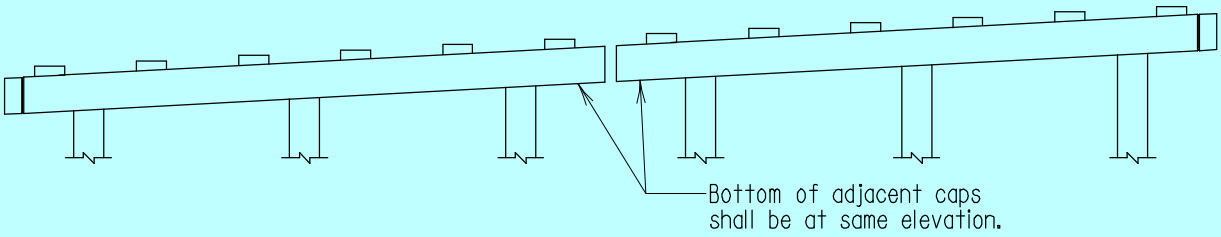

ALTERNATE CAP DETAIL

Scale: 3/32 " = 1'-0"

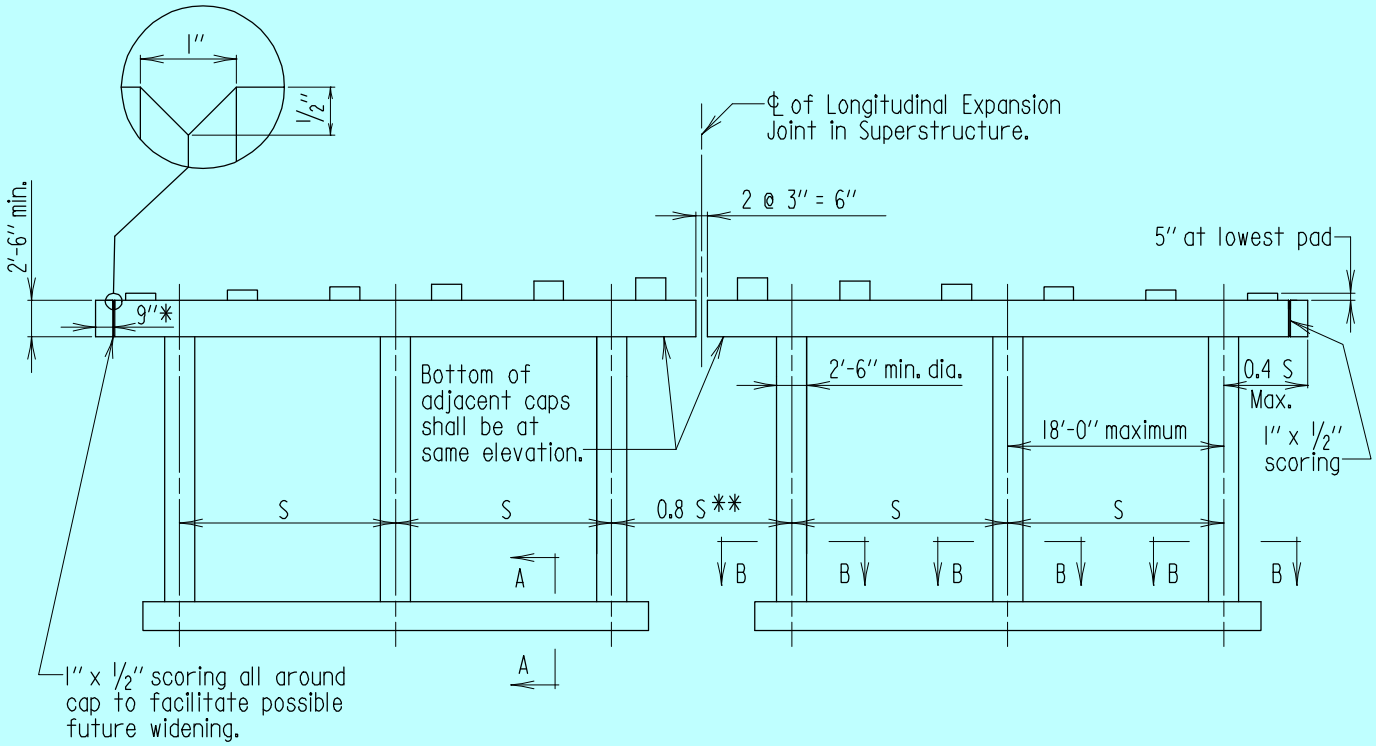

ELEVATION

Scale: 3/32 " = 1'-0"

* All main bars to be extended into this area so that the welded extension indicated on REBAR-ER-101 can be utilized. Designer must keep in mind this might necessitate more steel than required for original design.

** If possible

Note:

1. Criteria for individual pier units shall be as shown on sheets 1 and 2 of 4.
2. When bridge seat elevations are such that the height of any pad becomes greater than 1'-0" and the sloping of cap can eliminate or alleviate this condition then cap shall be sloped as indicated in "Alternate Cap Detail".
3. Whenever possible the S dimensions shall remain equal.
4. For Section A-A and B-B see sheet 4 of 4.

APPROVAL	
E.S. Friedman DIRECTOR OFFICE OF STRUCTURES	
DATE: 10/2/81	
REVISIONS	
SHA	FHWA
8-10-82	
1-11-88	
7-26-06	
FHWA APPROVAL	
DATE:	

* FOR OFFICE USE ONLY *

STATE OF MARYLAND
DEPARTMENT OF TRANSPORTATION
STATE HIGHWAY ADMINISTRATION
OFFICE OF STRUCTURES

DESIGN CRITERIA FOR
TYPICAL REINFORCED CONCRETE PIER
(CAP LENGTH LESS THAN 50')

STANDARD NO. SUB-PR-101 SHEET 3 OF 4

SUBSTRUCTURE - PIER

OLD NO. BR-SB(2.01)-81-125

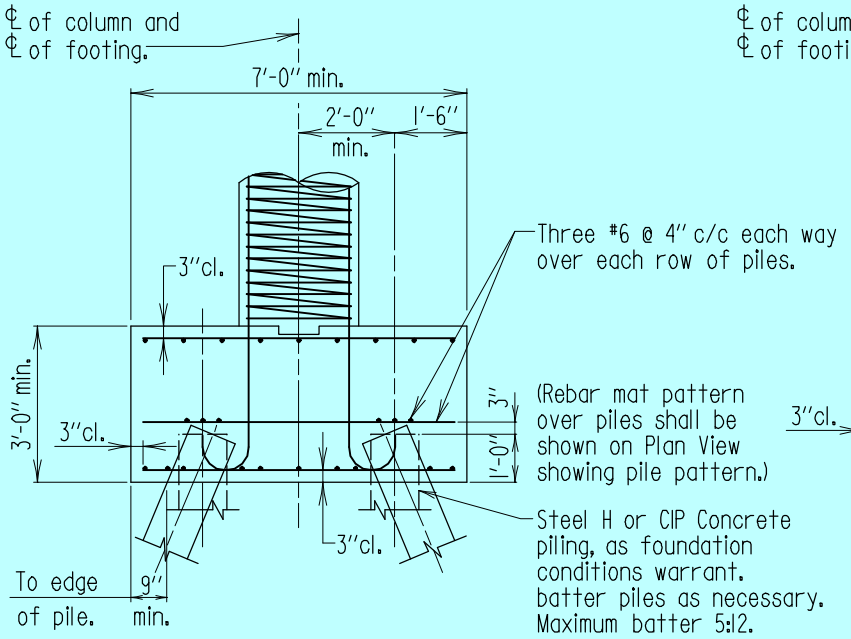

SECTION A-A WITH PILES

Scale: 1/4" = 1'-0"

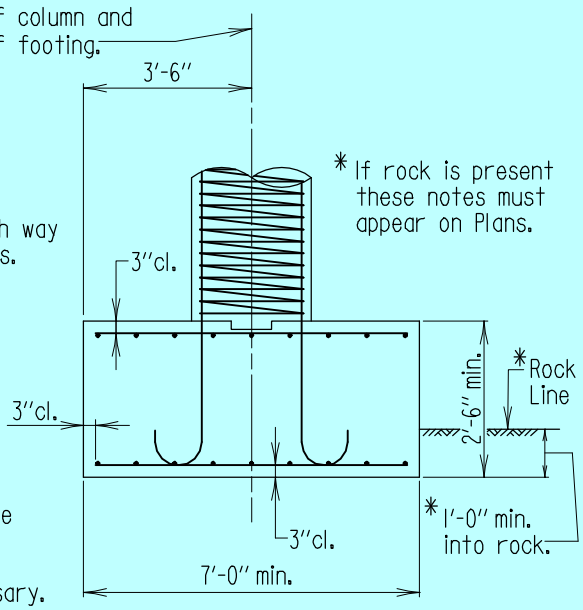

Note:
Where solid rock exists consideration should be given to individual footings, 7'-0" x 7'-0" x 2'-0" minimum size.

SECTION A-A SPREAD FOOTING

Scale: 1/4" = 1'-0"

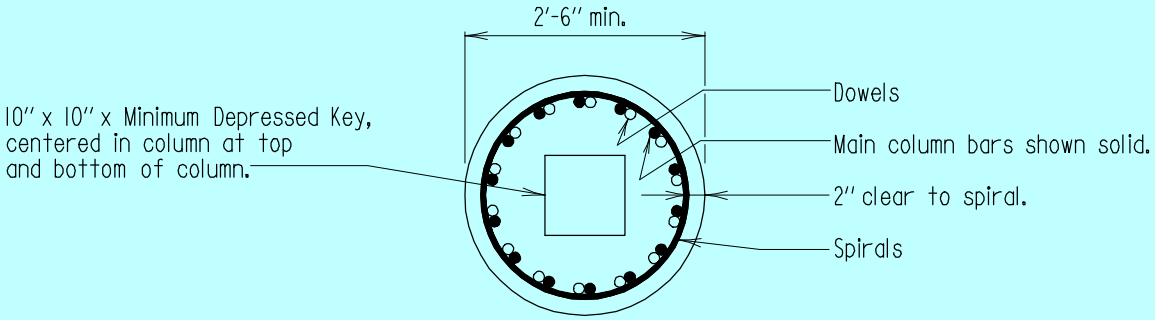

SECTION B-B

Scale: 1/2" = 1'-0"

MAXIMUM NUMBER OF MAIN COLUMN BARS			
Column Diameter	Reinforcing Bar Size		
	#9	#10	#11
2'-6"	16	15	14
2'-8"	18	16	15
2'-10"	19	18	17
3'-0"	20	19	18
3'-2"	22	20	19
3'-6"	25	23	22

Note:
1. Reinforcing steel for column spirals shall be cold drawn steel conforming to ASTM A 82.
2. The design bearing pressure for spread footings shall be shown on applicable Pier Sheet thus: "Maximum Design Bearing Pressure for Pier ____ is ____ Tons/s.f."

* FOR OFFICE USE ONLY *

APPROVAL	
E.S. Freedman DIRECTOR OFFICE OF STRUCTURES	
DATE: 10/2/81	
REVISIONS	
SHA	FHWA
7-20-82	
3-20-95	
1-22-01	
FHWA APPROVAL	
DATE:	

STATE OF MARYLAND
DEPARTMENT OF TRANSPORTATION
STATE HIGHWAY ADMINISTRATION
OFFICE OF STRUCTURES

DESIGN CRITERIA FOR
TYPICAL REINFORCED CONCRETE PIER

STANDARD NO. SUB-PR-101 SHEET 4 OF 4

SUBSTRUCTURE - PIER

OLD NO. BR-SB(2.01)-81-125

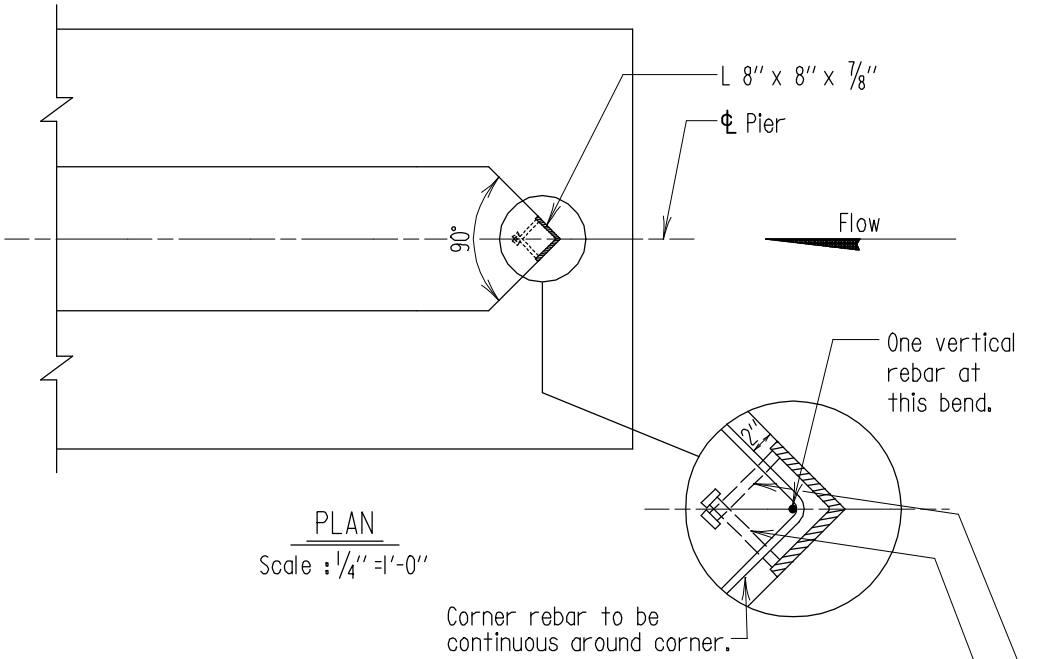

PLAN

Scale : 1/4" =1'-0"

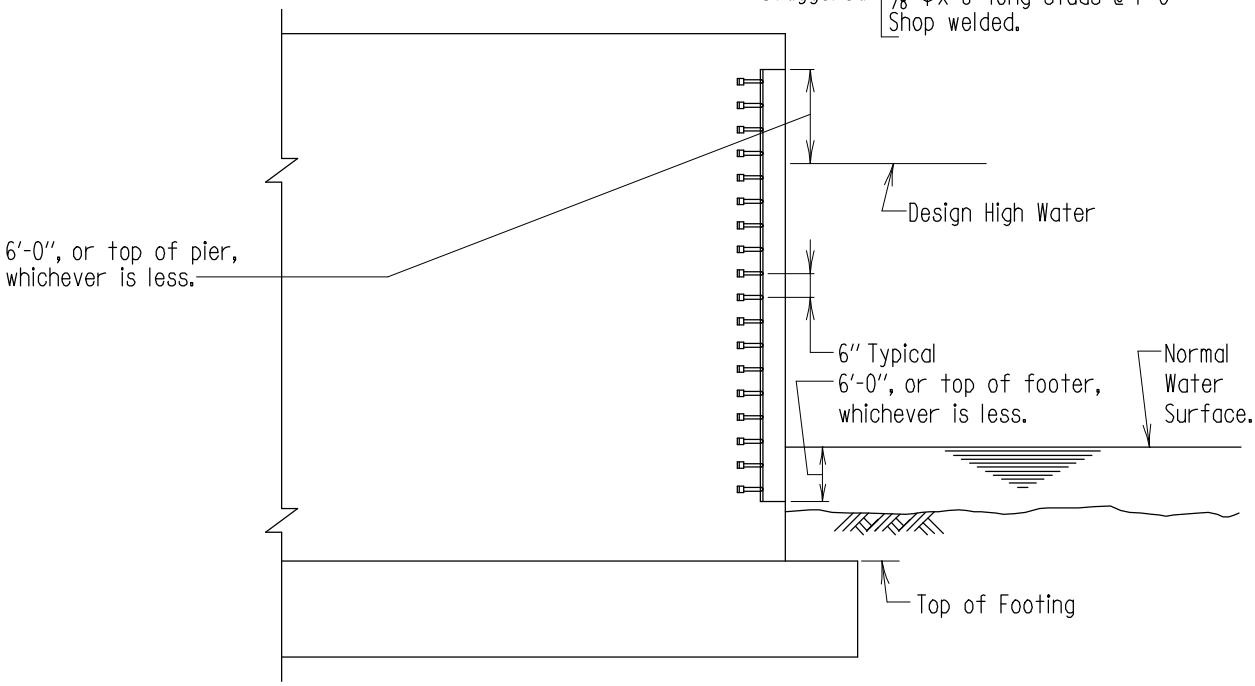

ELEVATION

Scale : 1/4" =1'-0"

Note:
1. Angle to be steel conforming to ASTM A-36.
2. Angle to be hot dipped galvanized, after fabrication, in accordance with ASTM A-123.

APPROVAL		
R.S. Freedman DIRECTOR OFFICE OF STRUCTURES DATE: 10/17/79		
REVISIONS		
SHA	FHWA	
1-22-01		

FHWA APPROVAL
DATE: 12-12-79

STATE OF MARYLAND
DEPARTMENT OF TRANSPORTATION
STATE HIGHWAY ADMINISTRATION
OFFICE OF STRUCTURES

NOSE ANGLE FOR SOLID SHAFT WATER PIER

STANDARD NO. SUB-PR-201 SHEET 1 OF 1

SUBSTRUCTURE - PIER

OLD NO. BR-SB(8.01)-79-197

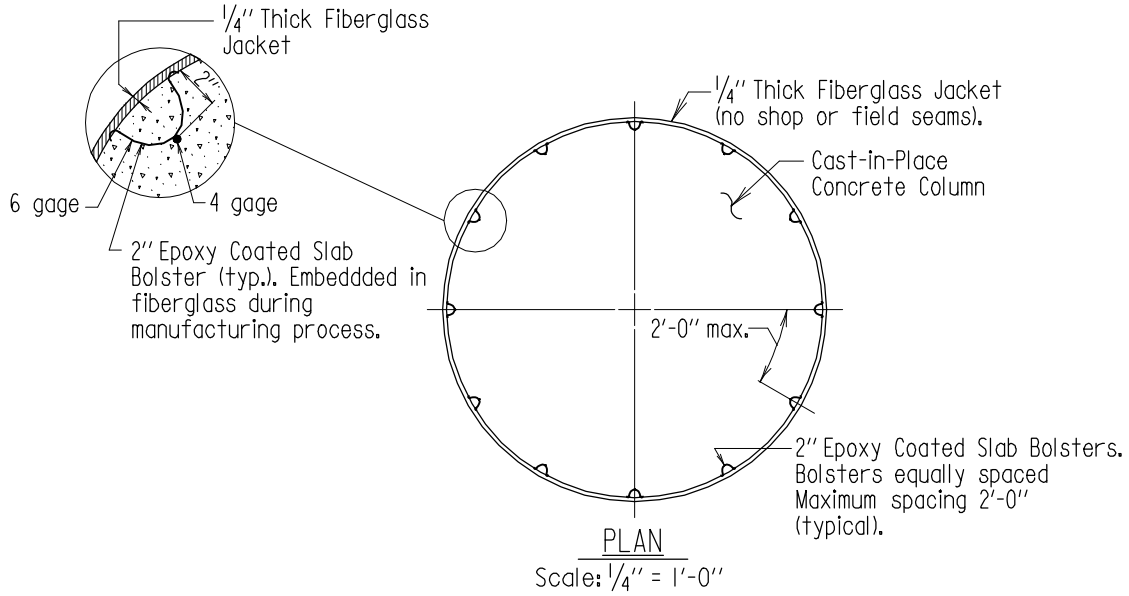

PLAN

Scale: 1/4" = 1'-0"

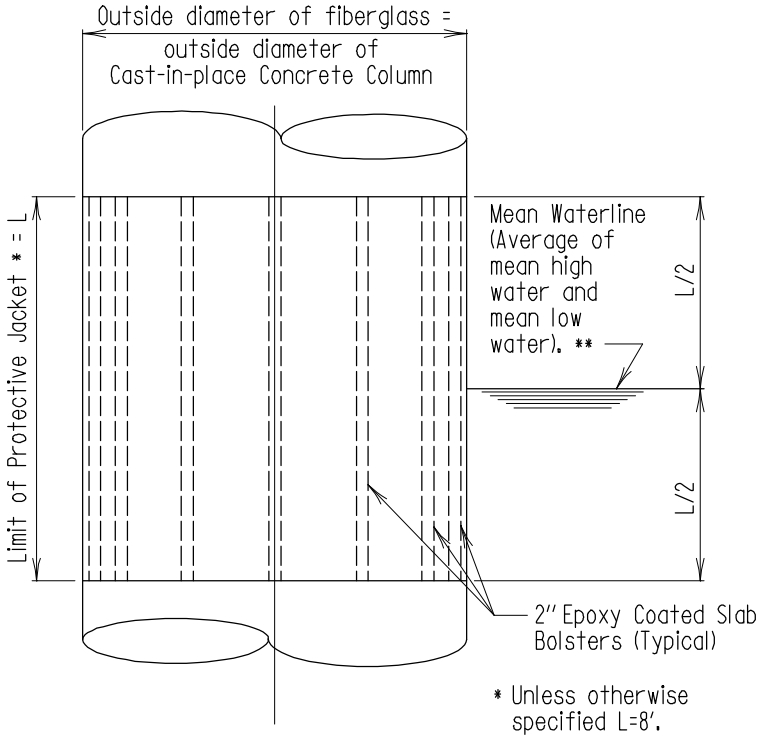

ELEVATION

Scale: 1/4" = 1'-0"

* Unless otherwise specified L=8'.

** Unless otherwise specified, locate at this elevation.

Notes:

1. For fiberglass requirements see 921.11.
2. For other fiberglass jacket requirments see Special Provisions.
3. Inside of jacket shall be thoroughly cleaned.

APPROVAL	
E.S. Freedman DIRECTOR OFFICE OF STRUCTURES	
DATE: 12/24/86	
REVISIONS	
SHA	FHWA
1-26-88	6-8-90
2-19-93	
1-22-01	

FHWA APPROVAL	
DATE: 6-8-90	

STATE OF MARYLAND
DEPARTMENT OF TRANSPORTATION
STATE HIGHWAY ADMINISTRATION
OFFICE OF STRUCTURES

FIBERGLASS JACKET FOR CAST-IN-PLACE CONCRETE COLUMN

STANDARD NO. SUB-PR-301 SHEET 1 OF 1

SUBSTRUCTURE - PIER

OLD NO. BR-SB(6.12)-86-184

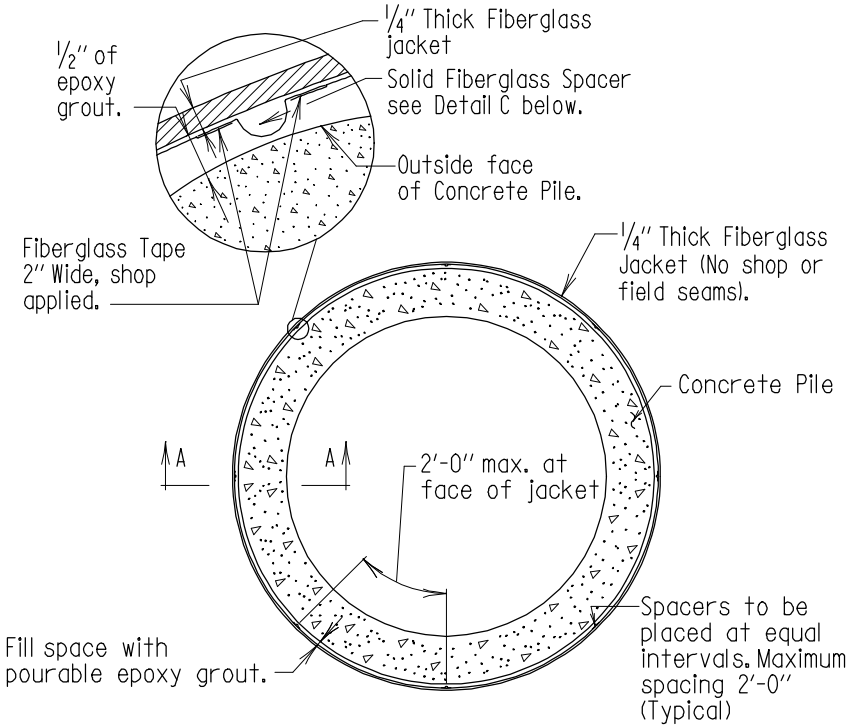

PLAN

Scale: 1/2" = 1'-0"

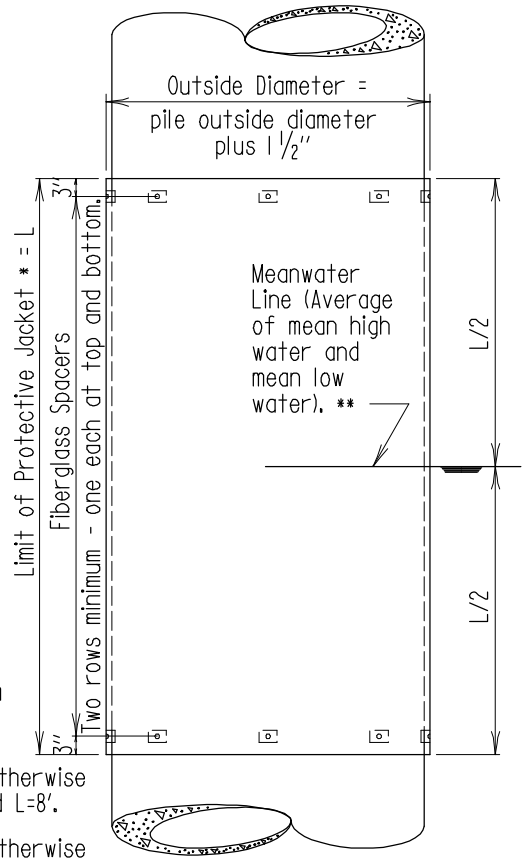

* Unless otherwise specified L=8'.

** Unless otherwise specified, locate at this elevation.

ELEVATION

Scale: 3/8" = 1'-0"

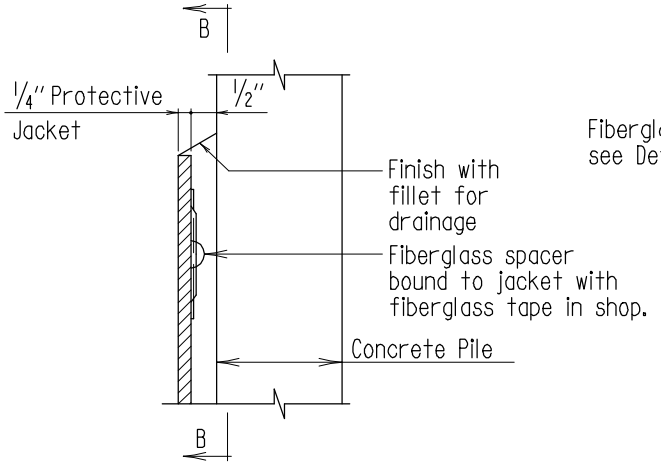

SECTION A-A

Scale: None

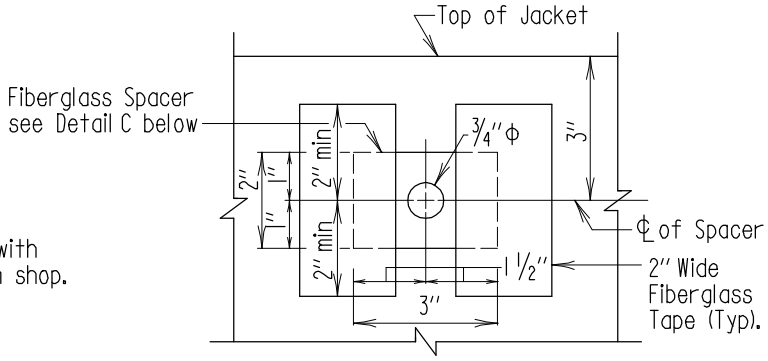

SECTION B-B

Scale: None

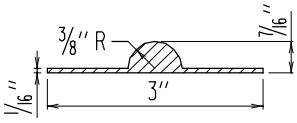

DETAIL C

Scale: None

Notes:

1. No vertical joints allowed.
2. Jackets to be placed before cap or footer is poured.
3. Fiberglass shall conform to 921.11.
4. For epoxy grout material requirements see Special Provisions.
5. Inside of jacket shall be thoroughly cleaned.
6. Jacket pile areas to be cleaned just prior to placing jacket refer to Section 418.

APPROVAL	
E.S. Freedman DIRECTOR OFFICE OF STRUCTURES	
DATE: 12/24/86	
REVISIONS	
SHA	FHWA
2-19-93	
9-24-96	
1-22-01	

FHWA APPROVAL
DATE: 6-8-90

STATE OF MARYLAND
DEPARTMENT OF TRANSPORTATION
STATE HIGHWAY ADMINISTRATION
OFFICE OF STRUCTURES

FIBERGLASS JACKET FOR NEW CYLINDER PILE

STANDARD NO. SUB-PR-302 SHEET 1 OF 1

SUBSTRUCTURE - PIER

OLD NO. BR-SB(6.08)-86-172

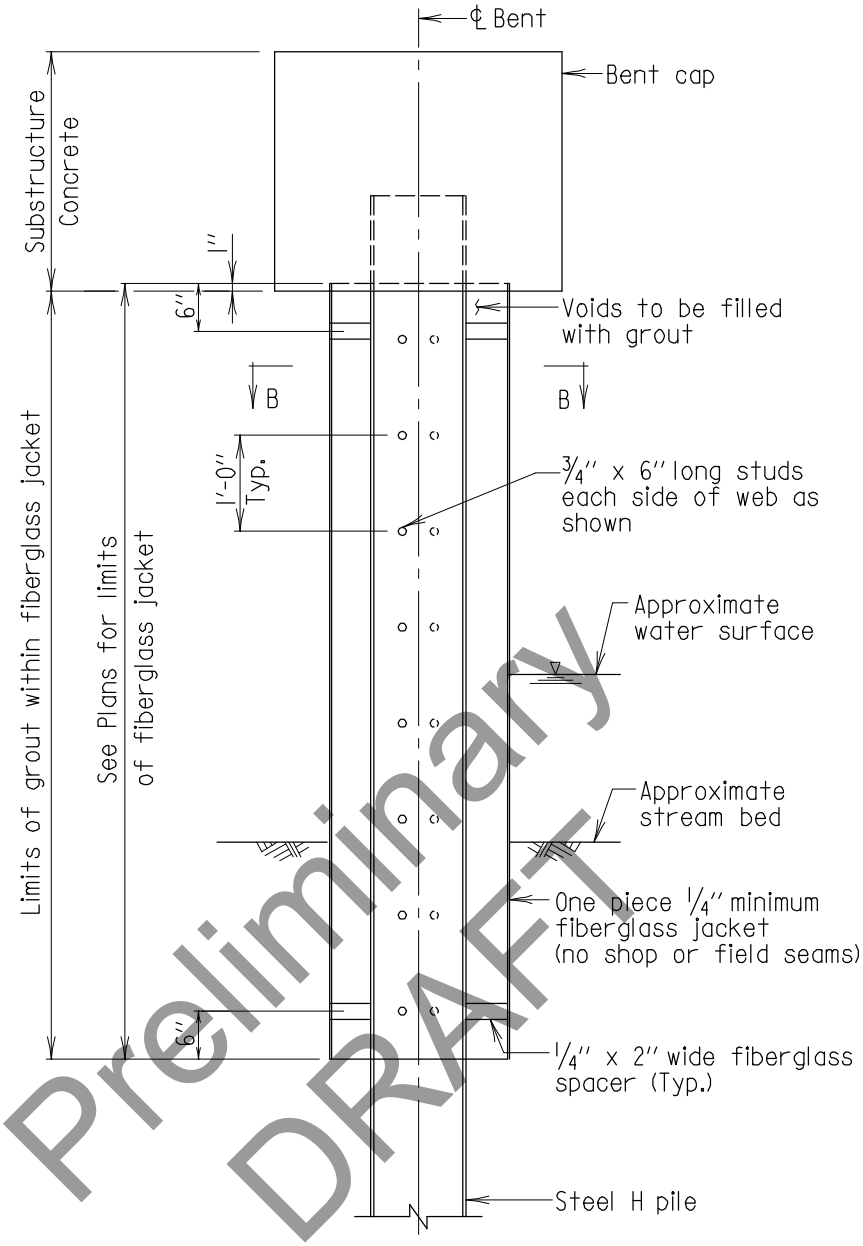

ELEVATION

Scale: 1/2''= 1'-0''

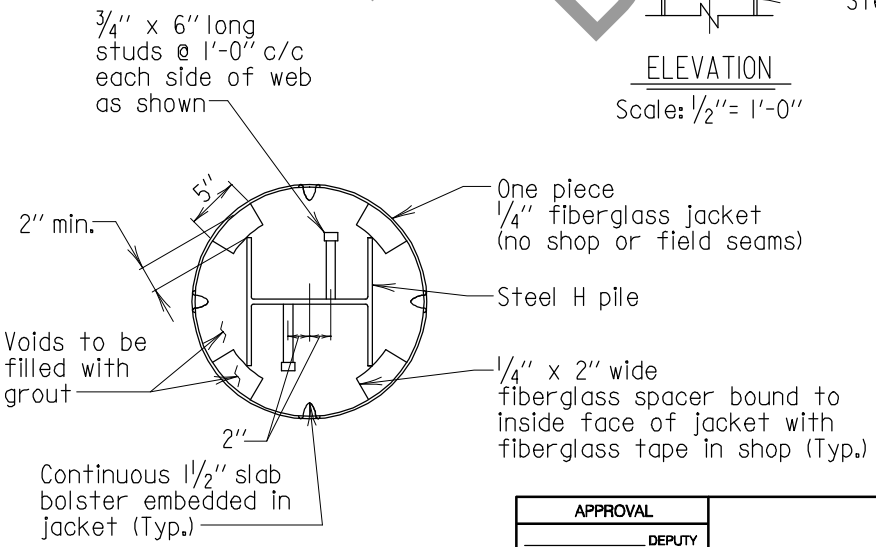

SECTION B-B

Scale: None

Notes:

1. Fiberglass shall conform to 921.13.
2. For fiberglass and grout material requirements see Special Provisions.
3. Clean pile area to be jacketed just prior to placing jacket.
4. Cost of studs to be included in pertinent protective jacket item.

* PRELIMINARY DRAFT *

APPROVAL	
_____ DEPUTY CHIEF ENGR. BRIDGE DEVEL.	
DATE: 09/01/15	
REVISIONS	
SHA	FHWA

FHWA APPROVAL

DATE:

STATE OF MARYLAND
DEPARTMENT OF TRANSPORTATION
STATE HIGHWAY ADMINISTRATION
OFFICE OF BRIDGE DEVELOPMENT

FIBERGLASS PROTECTIVE JACKET FOR H PILES (NEW CONSTRUCTION)

NO. SUB-PR-303 SHEET 1 OF 1

SUBSTRUCTURE - PIER

Preliminary DRAFT

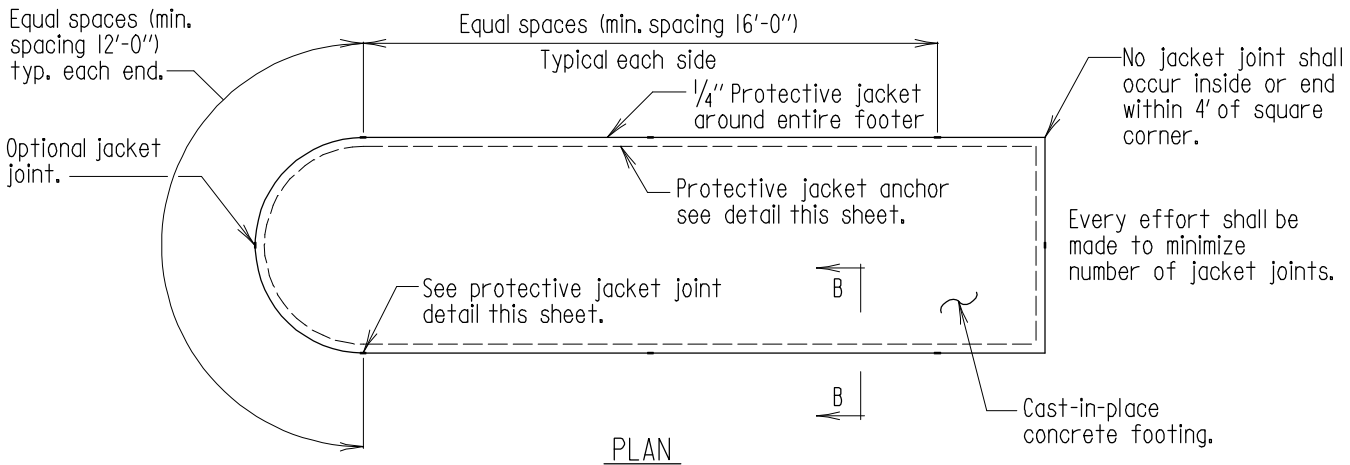

PLAN

Scale: None

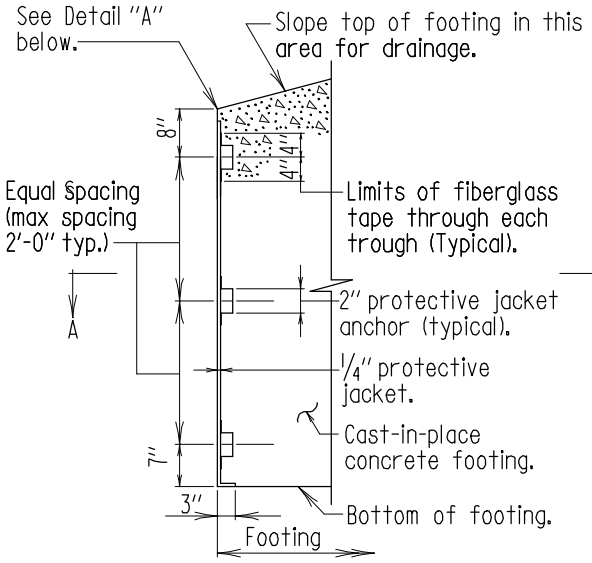

SECTION B-B

Scale: 3/8" = 1'-0"

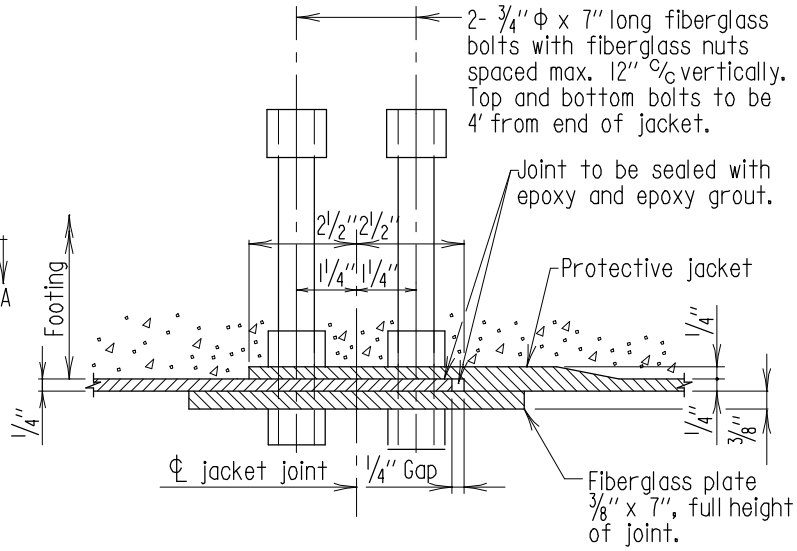

PROTECTIVE JACKET JOINT DETAIL

Scale: 3" = 1'-0"

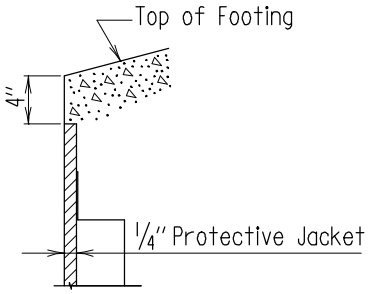

DETAIL A

Scale: None

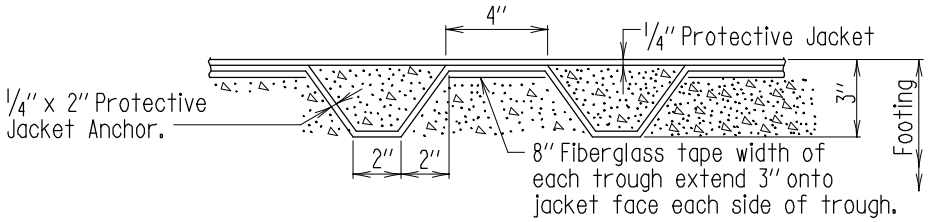

SECTION A-A

Scale: 1 1/2" = 1'-0"

Notes:

1. For Fiberglass requirements see 921.11.
2. For other fiberglass and epoxy grout material requirements see Special Provisions.
3. Inside of jacket shall be thoroughly cleaned.

APPROVAL	
E.S. Freedman DIRECTOR OFFICE OF STRUCTURES	
DATE: 12/24/86	
REVISIONS	
SHA	FHWA
1-26-88	6-8-90
2-19-93	
11-17-97	
1-22-01	

FHWA APPROVAL
DATE: 6-8-90

STATE OF MARYLAND
DEPARTMENT OF TRANSPORTATION
STATE HIGHWAY ADMINISTRATION
OFFICE OF STRUCTURES

FIBERGLASS JACKET FOR CAST-IN-PLACE CONCRETE FOOTING

STANDARD NO. SUB-PR-304 SHEET 1 OF 1

SUBSTRUCTURE - PIER

OLD NO. BR-SB(6.11)-86-185

SUBSTRUCTURE

BEARING PAD

(SUB-BP)

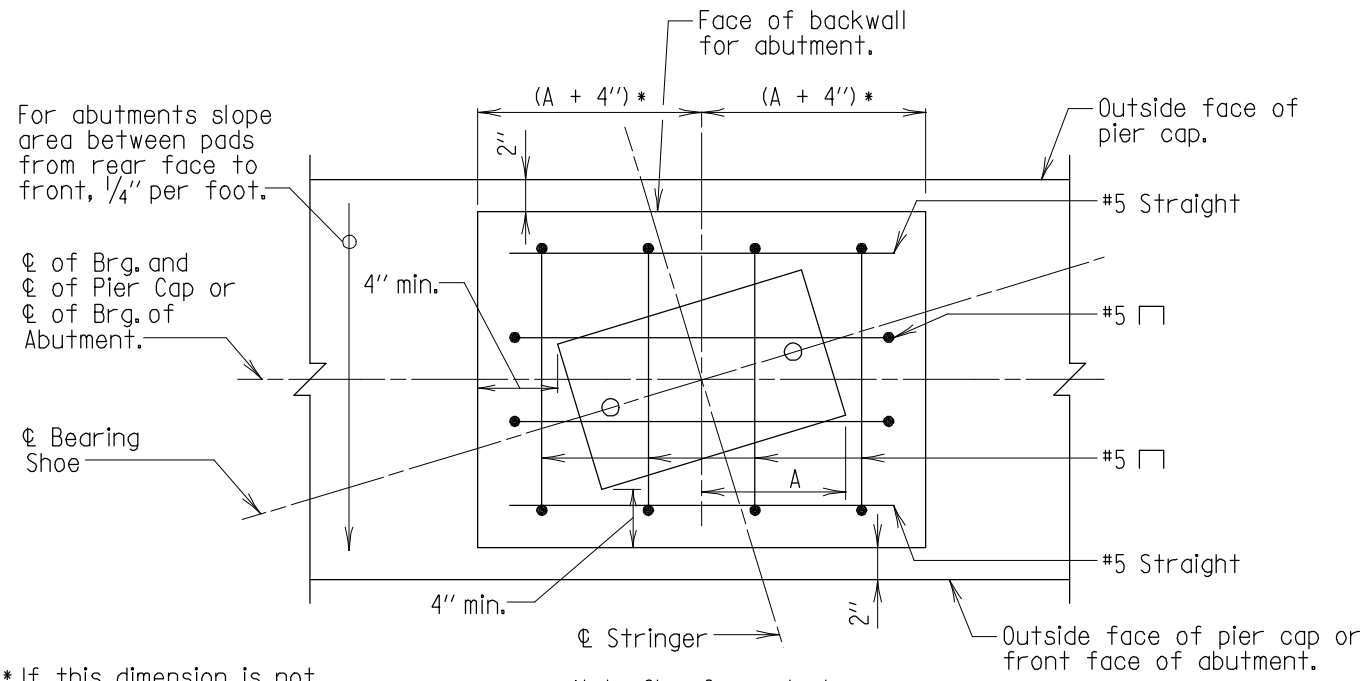

* If this dimension is not shown on Contract Drawing it shall be established for the largest value necessary on a support to the nearest higher inch, and the same dimension used for every pad on that support.

Note: Chamfer not shown.

PLAN

Scale: 1'' = 1'-0''

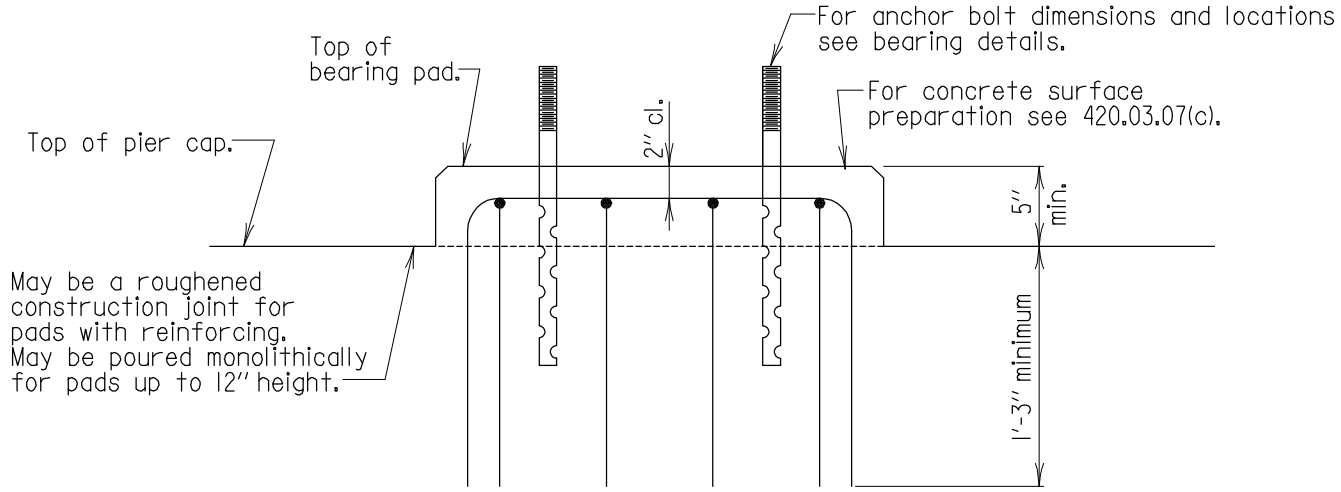

ELEVATION

Scale: 1'' = 1'-0''

Notes:

1. Anchor bolts shall be set in round holes drilled or cored into the masonry.
2. The drilled or cored holes shall have a diameter of at least 1'' larger than the diameter of the bolts.
3. Holes shall be filled with nonshrink grout conforming to 902.11(c).
4. For size of pad see pertinent substructure sheets, if not available see note in plan above.
5. Space reinforcing steel to clear anchor bolts.

APPROVAL		
R.S. Friedman DIRECTOR OFFICE OF STRUCTURES		
DATE: 10/15/80		
REVISIONS		
SHA	FHWA	
9-25-87	6-8-90	
1-4-94		
1-22-01		
8-18-05		
FHWA APPROVAL DATE: 2-27-81		

STATE OF MARYLAND
DEPARTMENT OF TRANSPORTATION
STATE HIGHWAY ADMINISTRATION
OFFICE OF STRUCTURES

BEARING PAD WHERE ONLY A SINGLE SHOE IS REQUIRED ON A SUPPORT

STANDARD NO. SUB-BP-101 SHEET 1 OF 1

SUBSTRUCTURE - BEARING PAD

OLD NO. BR-SB(6.02)-80-121

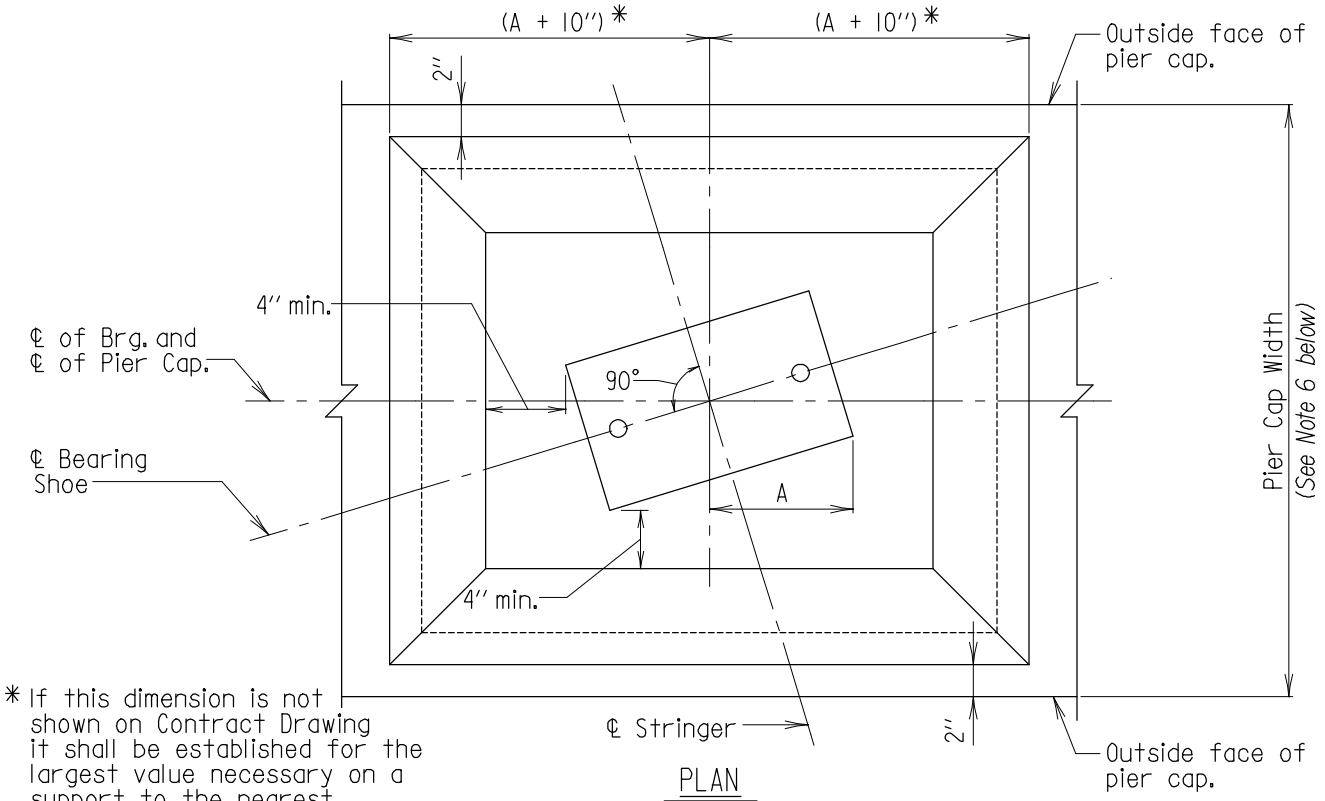

* If this dimension is not shown on Contract Drawing it shall be established for the largest value necessary on a support to the nearest higher inch, and the same dimension used for every pad on that support.

PLAN

Scale: 1″ = 1′-0″

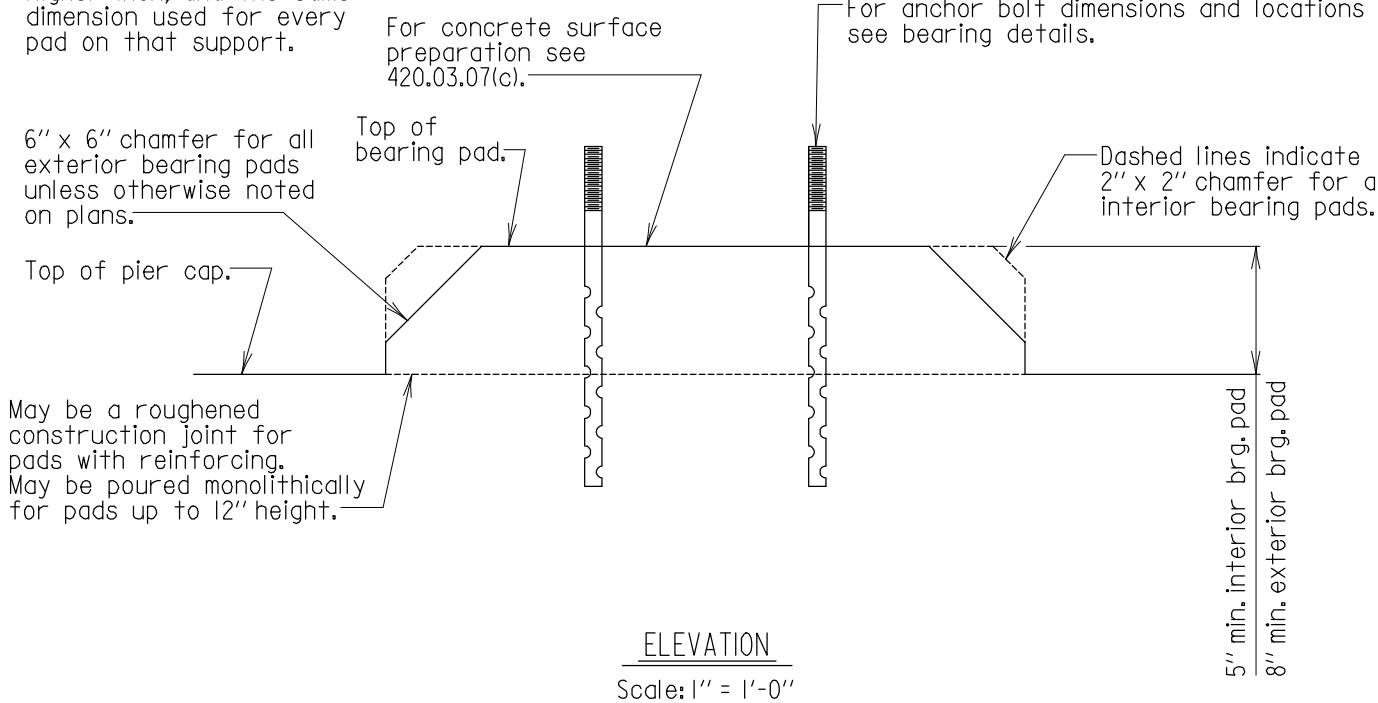

ELEVATION

Scale: 1″ = 1′-0″

Slanted lettering indicates notes "For Office Use Only".

Notes:

1. Anchor bolts shall be set in round holes drilled or cored into the masonry.
2. The drilled or cored holes shall have a diameter of at least 1″ larger than the diameter of the bolts.
3. Holes shall be filled with nonshrink grout in accordance with 902.11(c) T-160.
4. For size of pad see pertinent substructure sheets, if not available see note in plan above.
5. Space reinforcing steel to clear anchor bolts.
6. *If it is necessary to increase the pier cap width beyond what is required for design in order to provide the 6″ x 6″ chamfer, then the chamfer at the exterior pad will be the maximum which can be provided using the pier cap width required for design.*

APPROVAL	
E.S. Freedman DIRECTOR OFFICE OF STRUCTURES	
DATE: 6/14/85	
REVISIONS	
SHA	FHWA
5-18-93	
1-4-94	
1-22-01	
7-26-06	
FHWA APPROVAL	
DATE: 6-8-90	

STATE OF MARYLAND
DEPARTMENT OF TRANSPORTATION
STATE HIGHWAY ADMINISTRATION
OFFICE OF STRUCTURES

BEARING PAD (FOR SPECIAL PIERS) WHERE ONLY A SINGLE SHOE IS REQUIRED ON SUPPORT

STANDARD NO. SUB-BP-102 SHEET 1 OF 2

SUBSTRUCTURE - BEARING PAD

OLD NO. BR-SB(6.09)-85-175

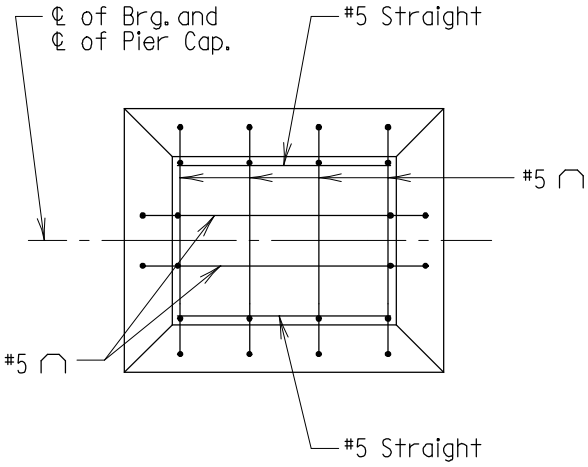

PLAN

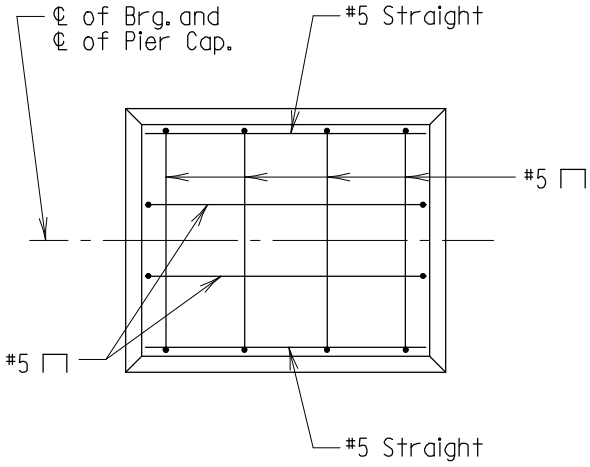

PLAN

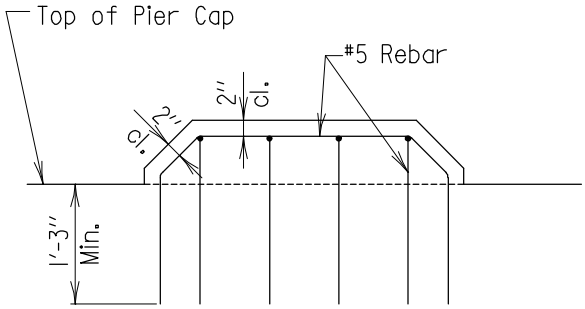

ELEVATION

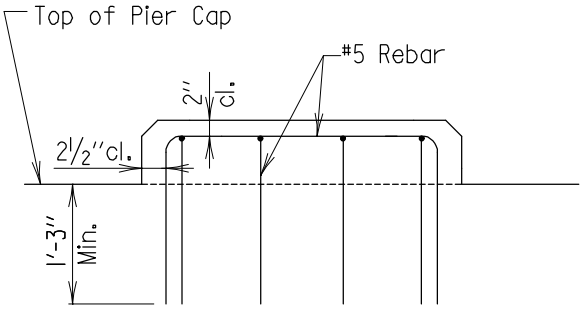

ELEVATION

EXTERIOR BEARING PAD

Scale: ½" = 1'-0"

INTERIOR BEARING PAD

Scale: ½" = 1'-0"

APPROVAL		
R.S. Freedman DIRECTOR OFFICE OF STRUCTURES DATE: 5/18/93		
REVISIONS		
SHA	FHWA	
FHWA APPROVAL		
DATE:		

STATE OF MARYLAND
DEPARTMENT OF TRANSPORTATION
STATE HIGHWAY ADMINISTRATION
OFFICE OF STRUCTURES

BEARING PAD (FOR SPECIAL PIERS) WHERE ONLY A SINGLE SHOE IS REQUIRED ON SUPPORT

STANDARD NO. SUB-BP-102 SHEET 2 OF 2

SUBSTRUCTURE - BEARING PAD

OLD NO. BR-SB(6.09)-85-175

SUBSTRUCTURE

UTILITIES

(SUB-UTL)

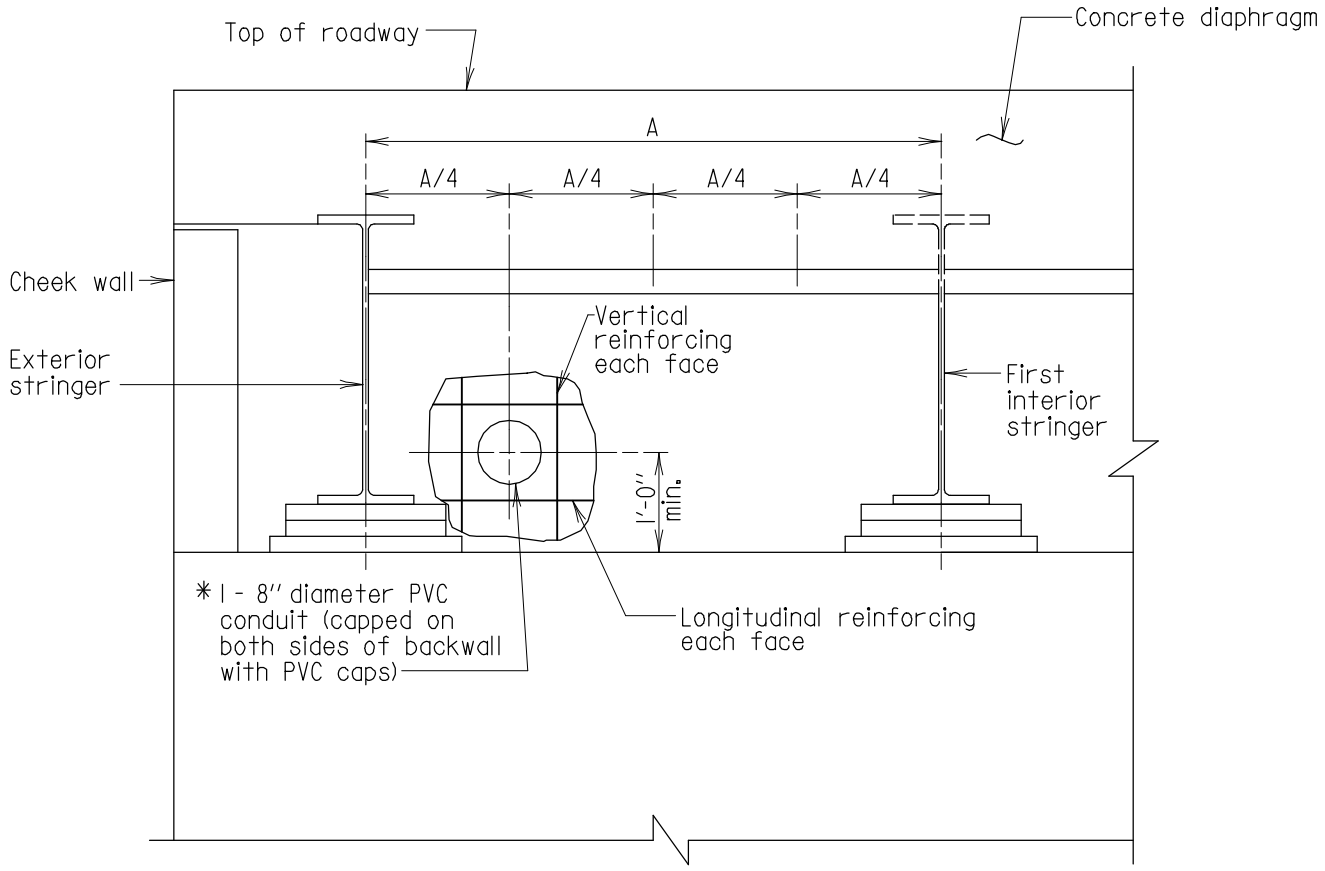

* Conduit shall be placed parallel to the adjacent stringer. Adjust placement of backwall reinforcing to allow conduit to pass through reinforcing as shown.

ELEVATION

Scale: 1/2" = 1'-0"

Notes:

1. Conduits to be at each corner of bridge as located in above detail. On dual bridges the conduits shall be located at all eight locations.
2. Pipe must extend past front face of backwall 6". Pipe to extend from rear face 5 feet beyond endpost/wingwall.
3. For PVC requirements see Section 905.
4. Cost, complete in place, to be incidental to other pertinent bid items.

APPROVAL	
R.S. Freedman DIRECTOR OFFICE OF STRUCTURES DATE: 1/13/99	
REVISIONS	
SHA	FHWA
1-22-01	
5-8-06	
12-4-08	
FHWA APPROVAL	
DATE:	

STATE OF MARYLAND
DEPARTMENT OF TRANSPORTATION
STATE HIGHWAY ADMINISTRATION
OFFICE OF STRUCTURES

SLEEVES FOR FUTURE UTILITIES AT ABUTMENT BACKWALLS

STANDARD NO. SUB-UTL-101 SHEET 1 OF 1

SUBSTRUCTURE - UTILITIES

OLD NO. BR-SB(6.46)-99-330

SUBSTRUCTURE

END POST

(SUB-EP)

SUBSTRUCTURE

END POST - 42” F-SHAPE

(SUB-EP(42F))

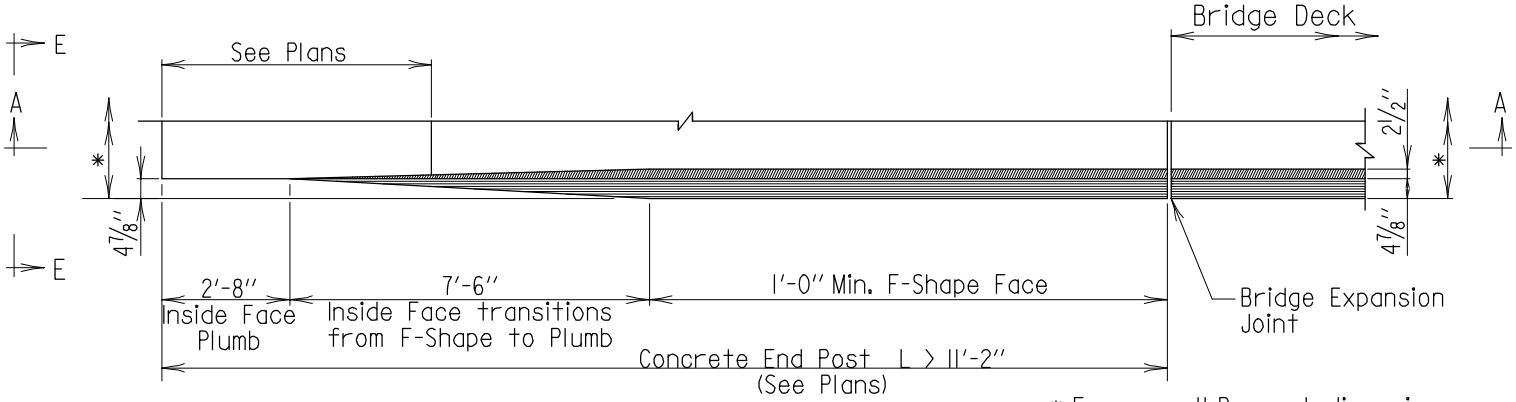

* For overall Parapet dimensions, see sheets 3 and 4 of 4.

PLAN

Scale: 1/4''=1'-0''

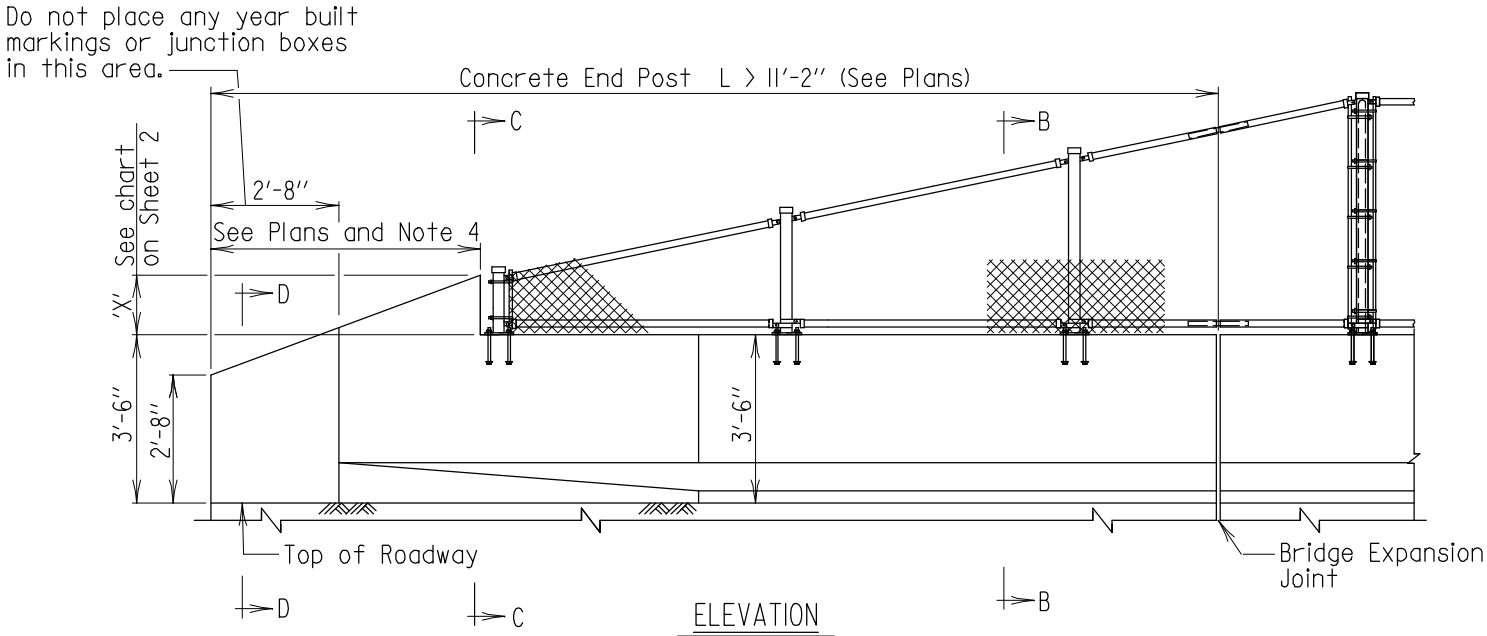

ELEVATION

Scale: 1/4''=1'-0''

Notes:

1. Use on the approach end of bridge when end post length is greater than 11'-2''.
2. Thrie Beam Traffic Barrier not shown.
3. Type II fence shown, see Plans for fence or railing layout and details.
4. Taper barrier height to 2'-8'' when Thrie Beam is required. Taper barrier height to 3'6'' and eliminate transition of F-Shape when adjacent to concrete F-Shape barrier.

Note to Designer:
This standard contains details for straight back, diamond back and recessed back parapets. Include the appropriate shape in the Contract Plans.

APPROVAL
DIRECTOR OFFICE OF STRUCTURES
DATE: 6/1/05

REVISIONS
SHA
FHWA

FHWA APPROVAL
DATE:

STATE OF MARYLAND
DEPARTMENT OF TRANSPORTATION
STATE HIGHWAY ADMINISTRATION
OFFICE OF STRUCTURES

42'' F-SHAPE PARAPET END POST WITH FENCING OR RAILING
APPROACH END, END POST LENGTH > 11'-2''

STANDARD NO. SUB-EP(42F)-101

SHEET 1 OF 4

OLD NO. BR-SB(6.53)-05-368

SUBSTRUCTURE - END POST

'X'	Fence or Railing Type
1'-0"	One Strand Railing
1'-3"	Type II Fence
1'-9"	Two Strand Railing

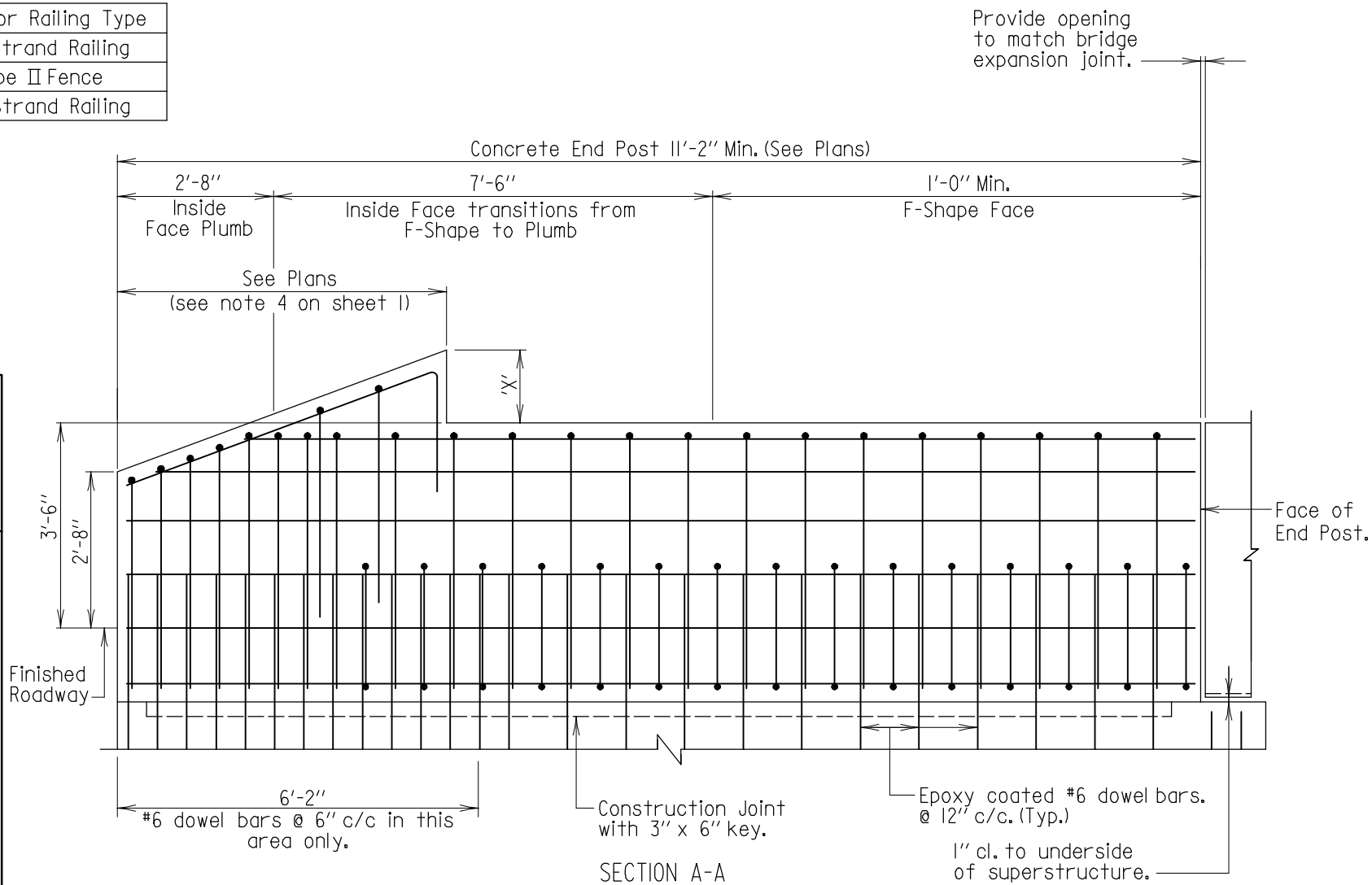

SECTION A-A

Scale: 3/8"=1'-0"

Notes:
1. For Parapet Reinforcing Details, see sheets 3 and 4.
2. Fencing or Railing not shown.
3. If applicable, reinforcing for coping not shown.

Note to Designer:
This standard contains details for straight back, diamond back and recessed back parapets. Include the appropriate shape in the Contract Plans.

APPROVAL
DIRECTOR OFFICE OF STRUCTURES
DATE: 6/1/05

REVISIONS

SHA	11-14-05
FHWA	12-22-14

FHWA APPROVAL
DATE:

STATE OF MARYLAND
DEPARTMENT OF TRANSPORTATION
STATE HIGHWAY ADMINISTRATION
OFFICE OF STRUCTURES

42" F-SHAPE PARAPET END POST WITH FENCING OR RAILING
APPROACH END, END POST LENGTH > 11'-2"

STANDARD NO. SUB-EP(42F)-101

SHEET 2 OF 4

OLD NO. BR-SB(6.53)-05-368

SUBSTRUCTURE - END POST

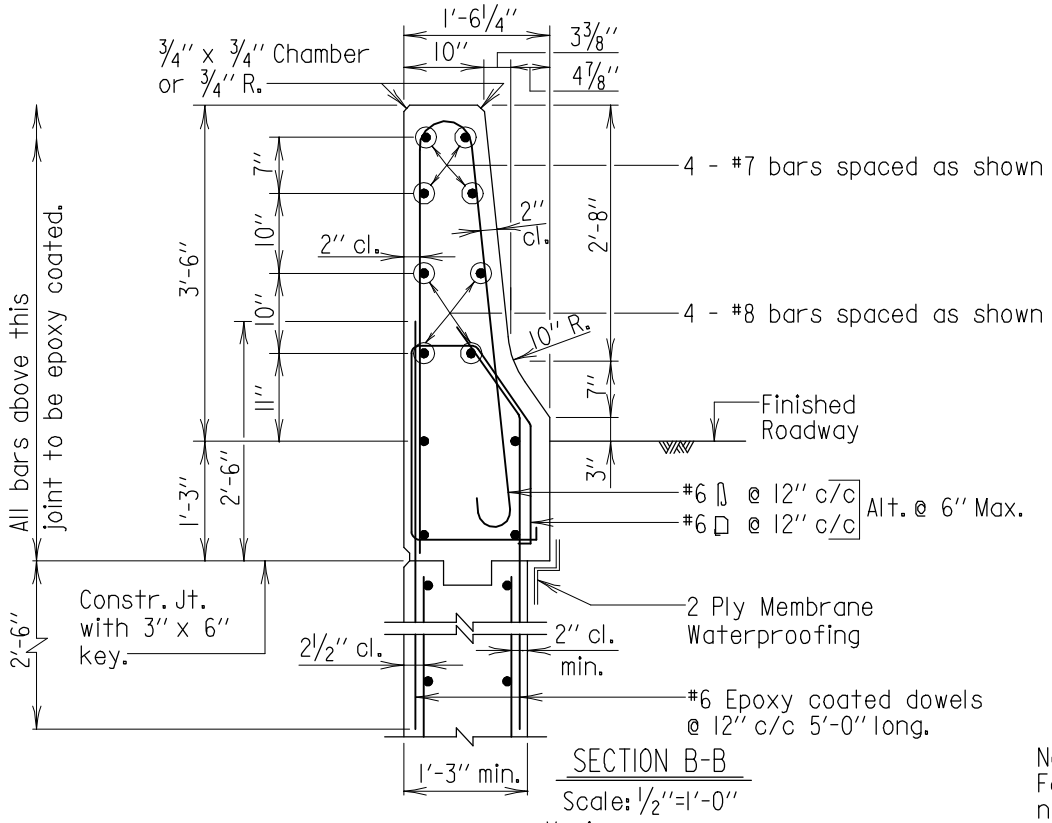

SECTION B-B

Scale: 1/2"=1'-0"

Note:
Fencing or Railing
not shown.

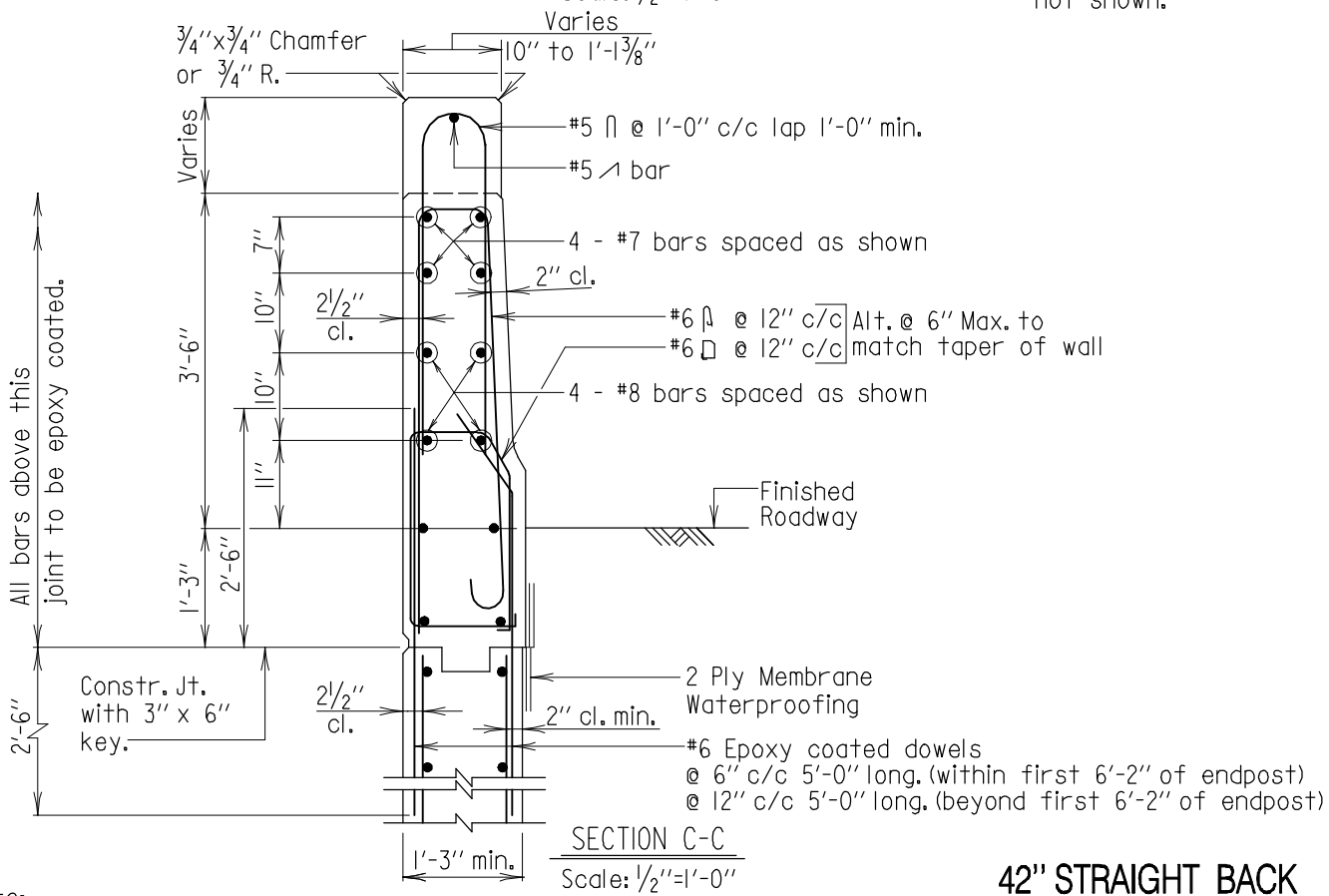

SECTION C-C

Scale: 1/2"=1'-0"

Note:
All longitudinal bars are #5 spaced
as shown, unless noted otherwise.

42" STRAIGHT BACK

APPROVAL	
DIRECTOR OFFICE OF STRUCTURES DATE: 6/1/05	
REVISIONS	
SHA	FHWA
11-14-05	
FHWA APPROVAL	
DATE:	

STATE OF MARYLAND
DEPARTMENT OF TRANSPORTATION
STATE HIGHWAY ADMINISTRATION
OFFICE OF STRUCTURES

42" F-SHAPE PARAPET END POST WITH
FENCING OR RAILING
APPROACH END, END POST LENGTH > 11'-2"

STANDARD NO. SUB-EP(42F)-101 SHEET 3 OF 4

SUBSTRUCTURE - END POST

OLD NO. BR-SB(6.53)-05-368

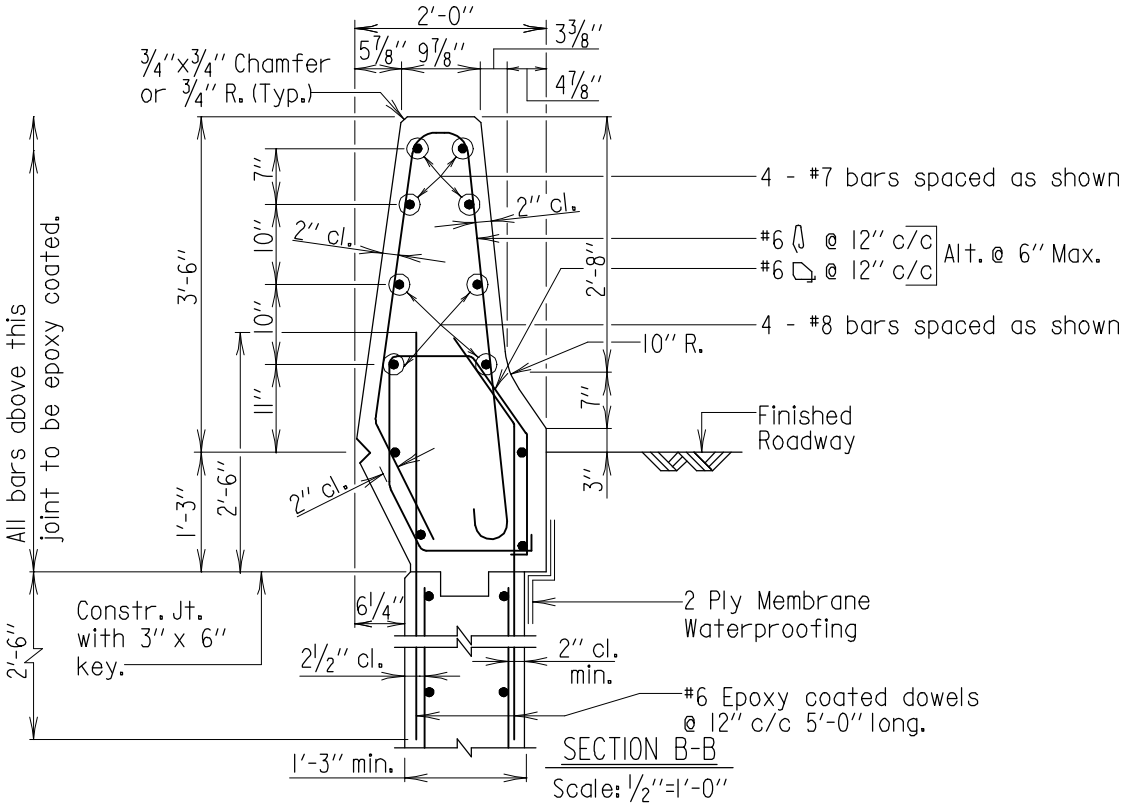

SECTION B-B

Scale: 1/2"=1'-0"

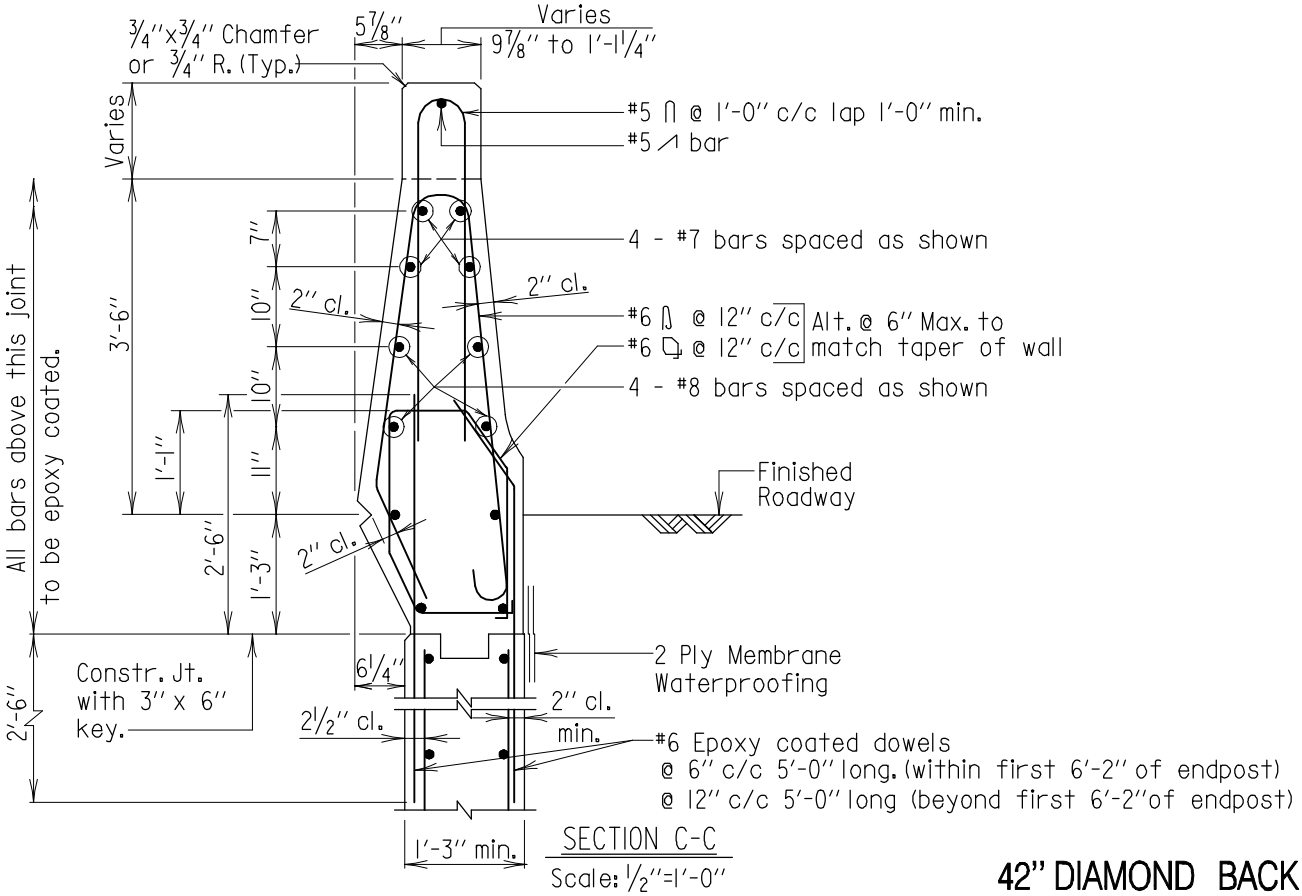

SECTION C-C

Scale: 1/2"=1'-0"

42" DIAMOND BACK

Note:
All longitudinal bars are #5 spaced as shown, unless noted otherwise.

APPROVAL	
DIRECTOR OFFICE OF STRUCTURES DATE: 6/1/05	
REVISIONS	
SHA	FHWA
11-14-05	
12-22-14	
FHWA APPROVAL	
DATE:	

STATE OF MARYLAND
DEPARTMENT OF TRANSPORTATION
STATE HIGHWAY ADMINISTRATION
OFFICE OF STRUCTURES

42" F-SHAPE PARAPET END POST WITH FENCING OR RAILING
APPROACH END, END POST LENGTH > 11'-2"

STANDARD NO. SUB-EP(42F)-101 SHEET 3 OF 4

SUBSTRUCTURE - END POST

OLD NO. BR-SB(6.53)-05-368

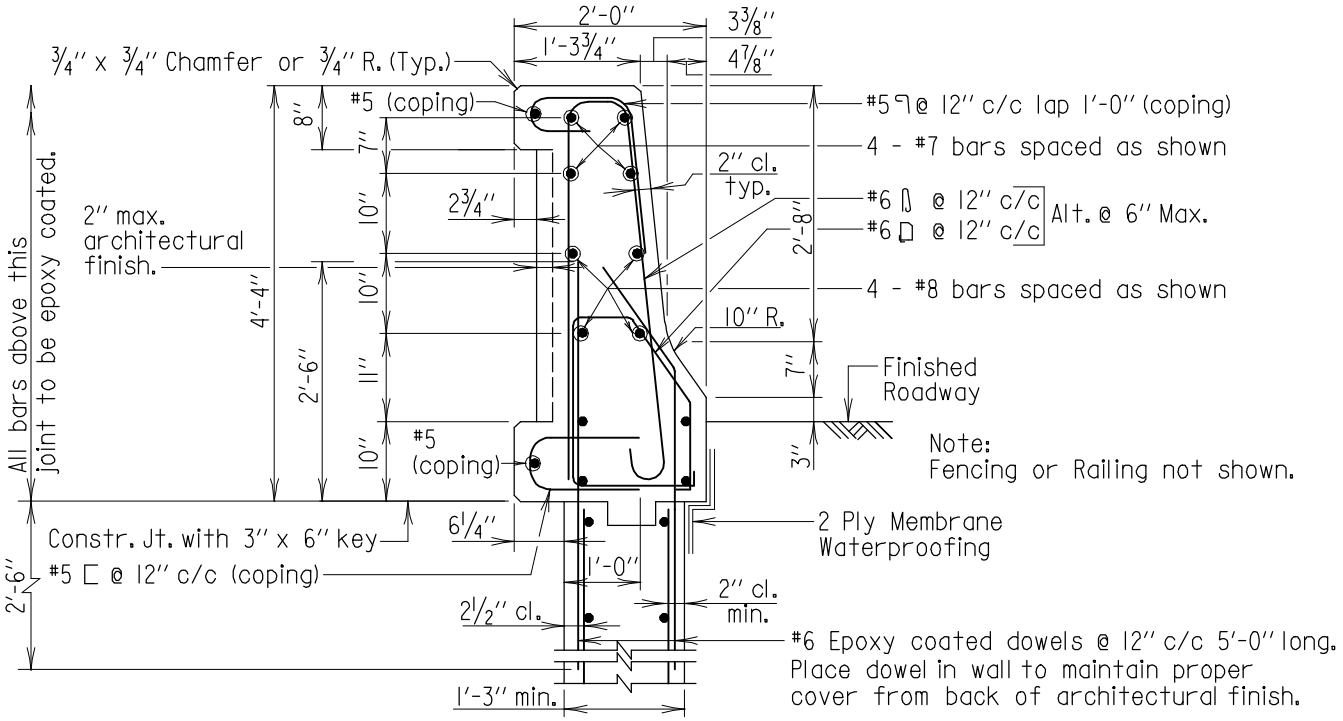

SECTION B-B

Scale: 1/2"=1'-0"

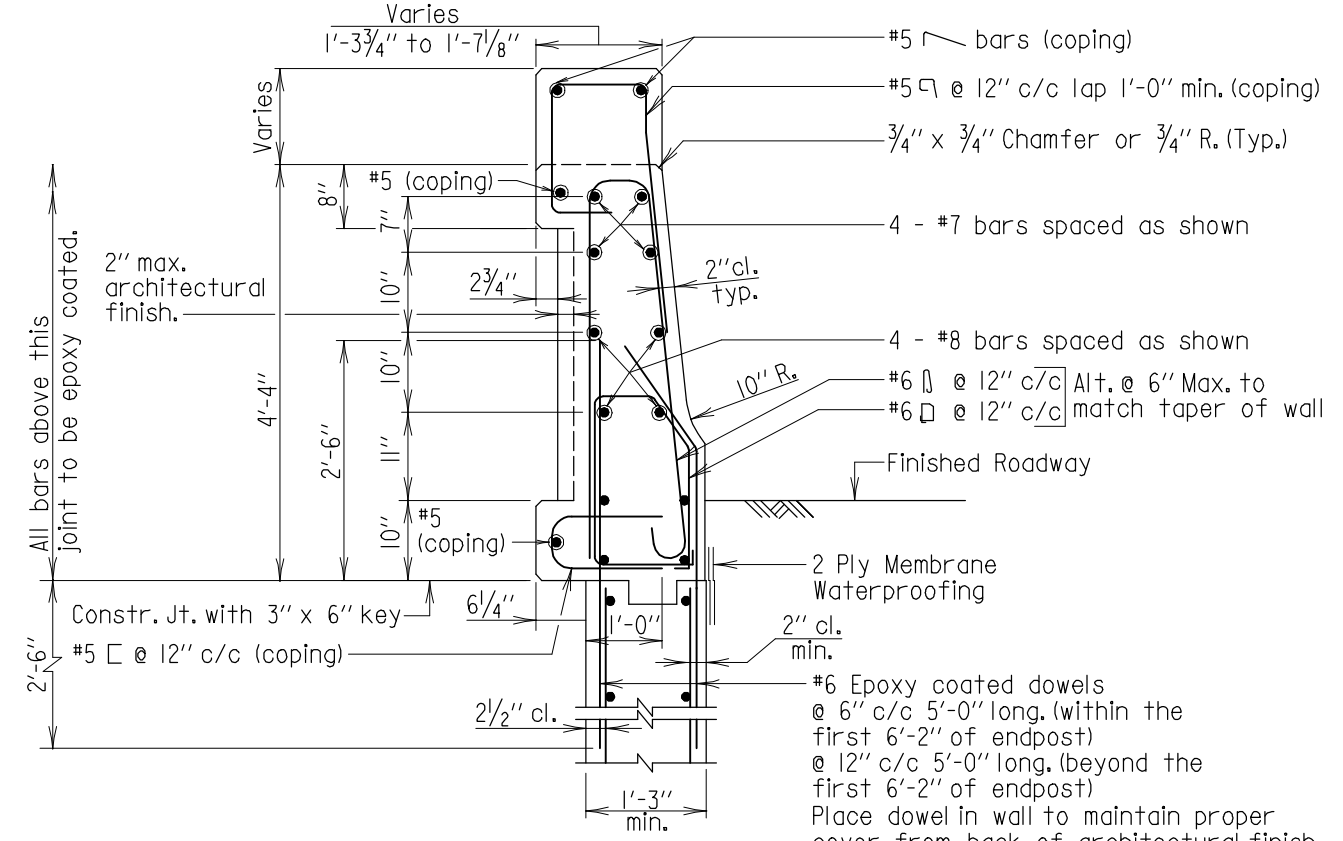

SECTION C-C

Scale: 1/2"=1'-0"

42" RECESSED BACK

Note:
All longitudinal bars are #5 spaced as shown, unless noted otherwise.

APPROVAL		
E.S. Freedman DIRECTOR OFFICE OF STRUCTURES DATE: 6/1/05		
REVISIONS		
SHA	FHWA	
11-14-05		
12-12-08		
FHWA APPROVAL		
DATE:		

STATE OF MARYLAND
DEPARTMENT OF TRANSPORTATION
STATE HIGHWAY ADMINISTRATION
OFFICE OF STRUCTURES

42" F-SHAPE PARAPET END POST WITH FENCING OR RAILING
APPROACH END, END POST LENGTH > 11'-2"

STANDARD NO. SUB-EP(42F)-101 SHEET 3 OF 4

SUBSTRUCTURE - END POST

OLD NO. BR-SB(6.53)-05-368

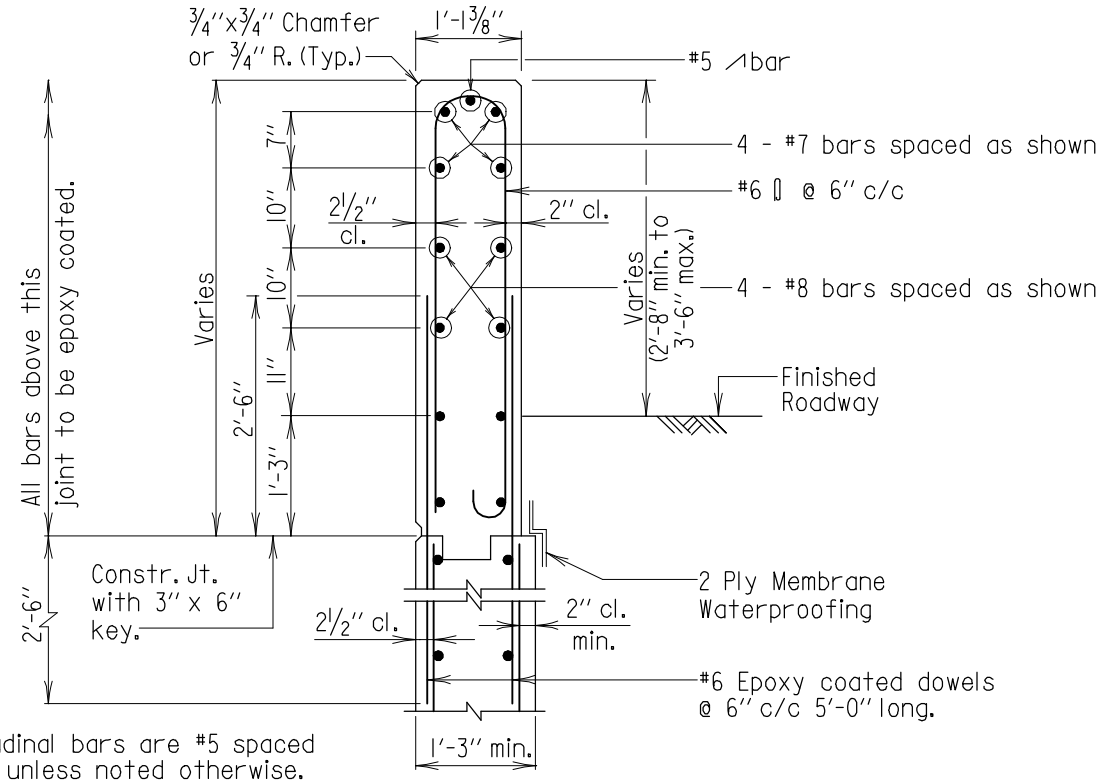

Note:
All longitudinal bars are #5 spaced as shown, unless noted otherwise.

SECTION D-D

Scale: 1/2"=1'-0"

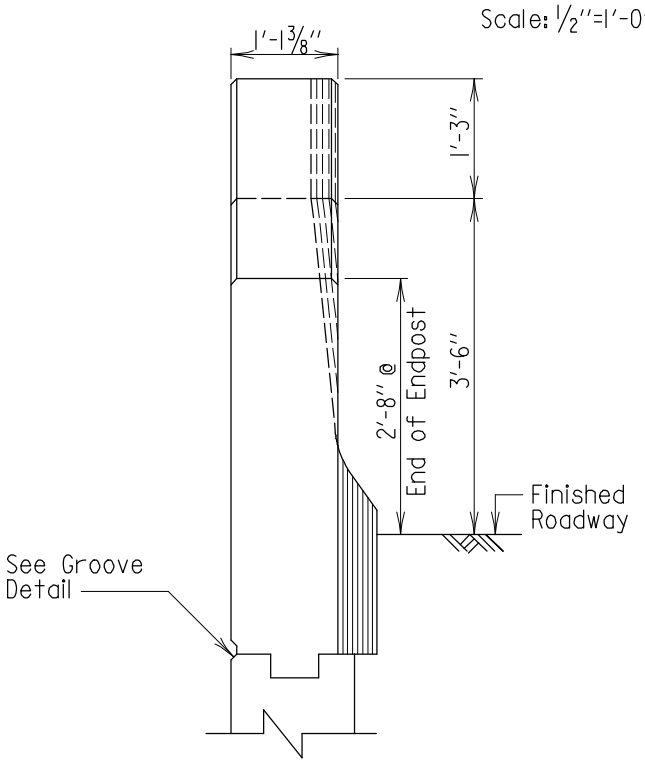

Note:
Reinforcing steel not shown.

VIEW E-E

Scale: 1/2"=1'-0"

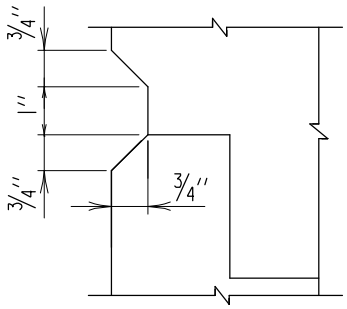

GROOVE DETAIL

Scale: 3"=1'-0"

42" STRAIGHT BACK

APPROVAL		
E.S. Freedman DIRECTOR OFFICE OF STRUCTURES DATE: 6/1/05		
REVISIONS		
SHA	FHWA	
11-14-05		
12-22-14		
FHWA APPROVAL		
DATE:		

STATE OF MARYLAND
DEPARTMENT OF TRANSPORTATION
STATE HIGHWAY ADMINISTRATION
OFFICE OF STRUCTURES

42" F-SHAPE PARAPET END POST WITH FENCING OR RAILING
APPROACH END, END POST LENGTH > 11'-2"

STANDARD NO. SUB-EP(42F)-101 SHEET 4 OF 4

SUBSTRUCTURE - END POST

OLD NO. BR-SB(6.53)-05-368

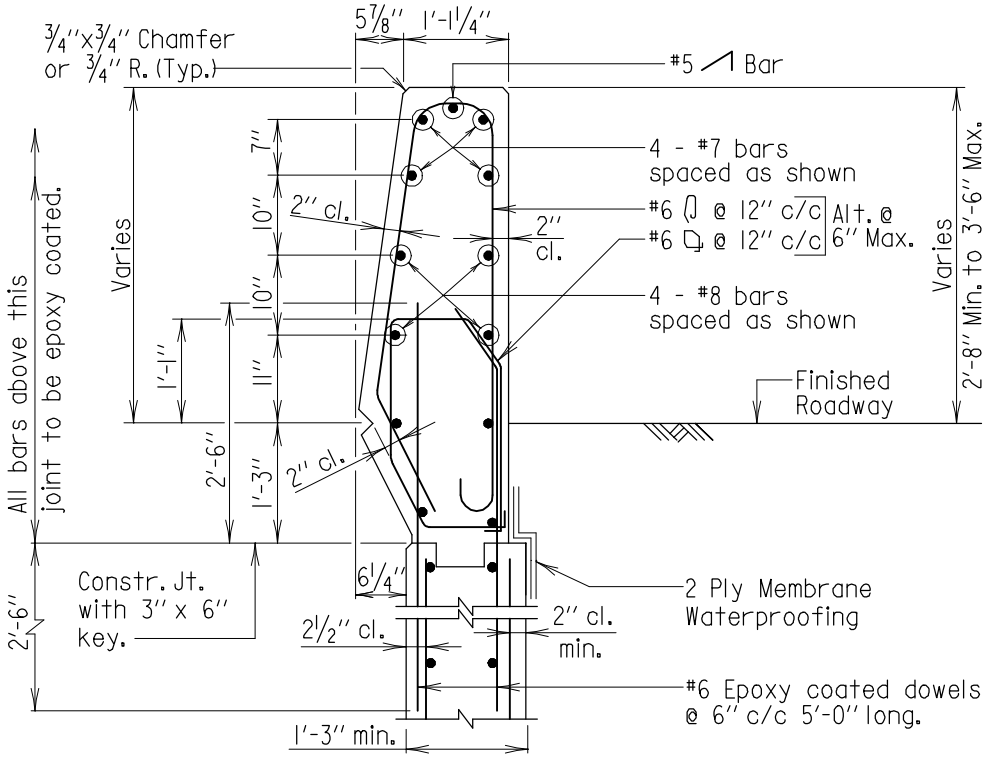

Note:
All longitudinal bars are #5 spaced as shown, unless noted otherwise.

SECTION D-D
Scale: 1/2"=1'-0"

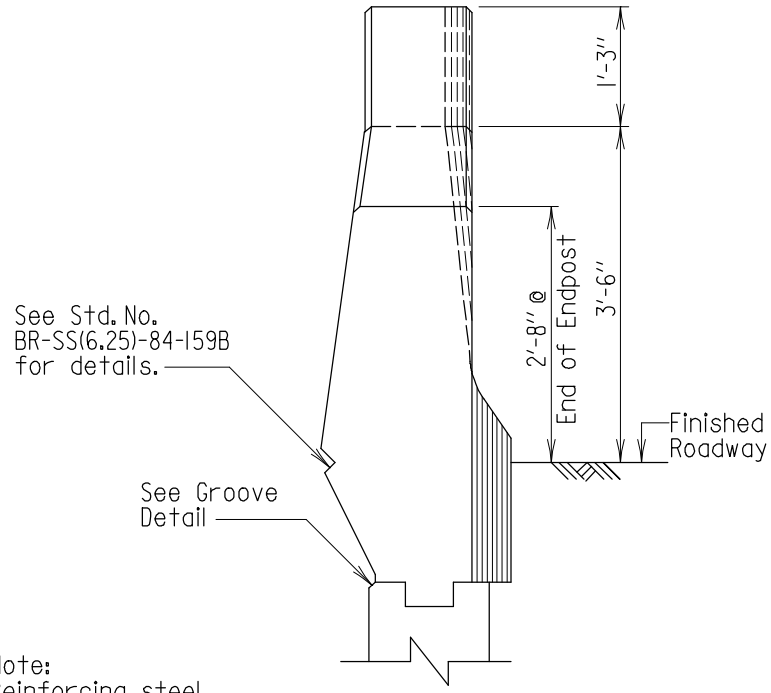

Note:
Reinforcing steel not shown.

VIEW E-E
Scale: 1/2"=1'-0"

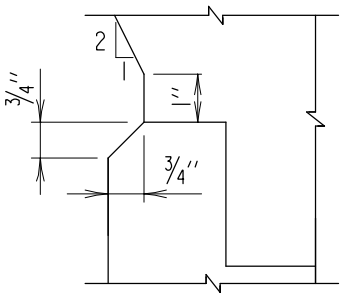

GROOVE DETAIL
Scale: 3"=1'-0"

42" DIAMOND BACK

APPROVAL	
E.S. Freedman DIRECTOR OFFICE OF STRUCTURES DATE: 6/1/05	
REVISIONS	
SHA	FHWA
11-14-05	
FHWA APPROVAL	
DATE:	

STATE OF MARYLAND
DEPARTMENT OF TRANSPORTATION
STATE HIGHWAY ADMINISTRATION
OFFICE OF STRUCTURES

42" F-SHAPE PARAPET END POST WITH FENCING OR RAILING
APPROACH END, END POST LENGTH > 11'-2"

STANDARD NO. SUB-EP(42F)-101 SHEET 4 OF 4

SUBSTRUCTURE - END POST

OLD NO. BR-SB(6.53)-05-368

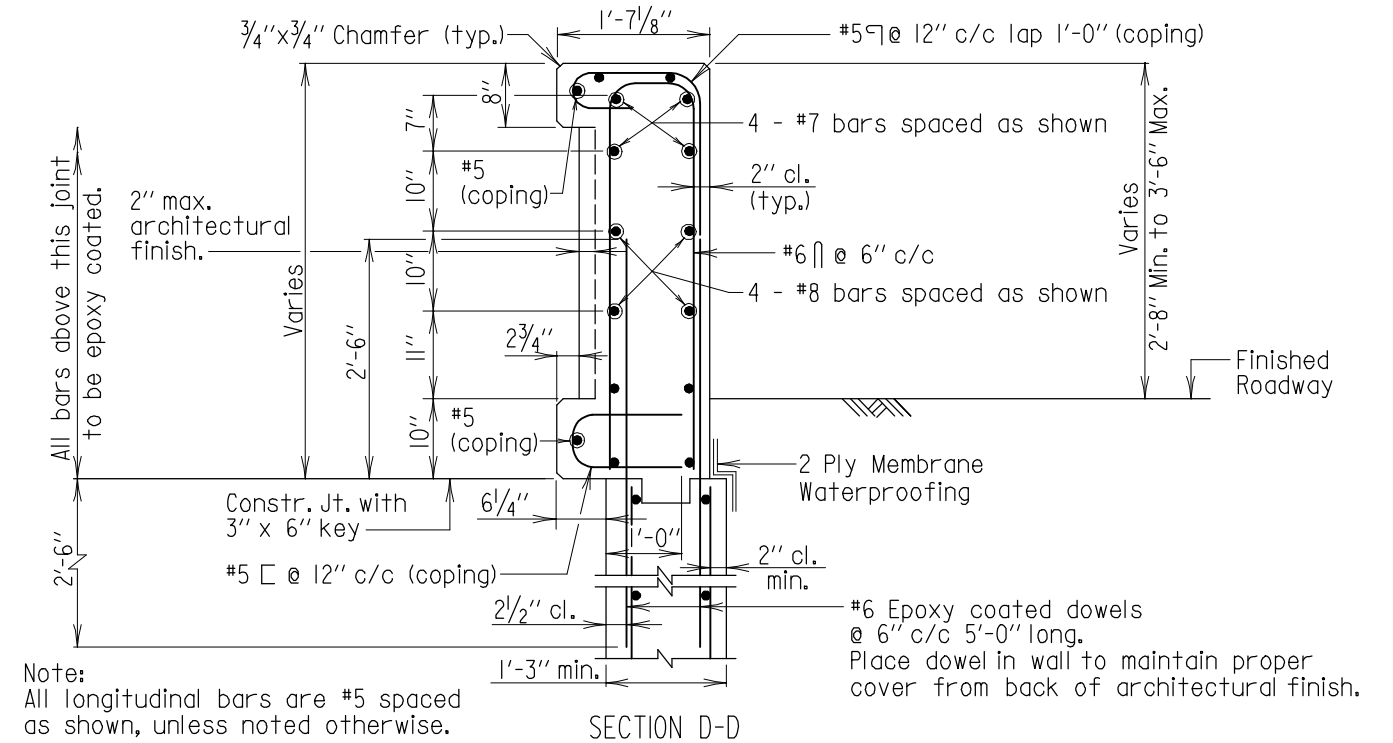

Note:
All longitudinal bars are #5 spaced as shown, unless noted otherwise.

SECTION D-D
Scale: 1/2"=1'-0"

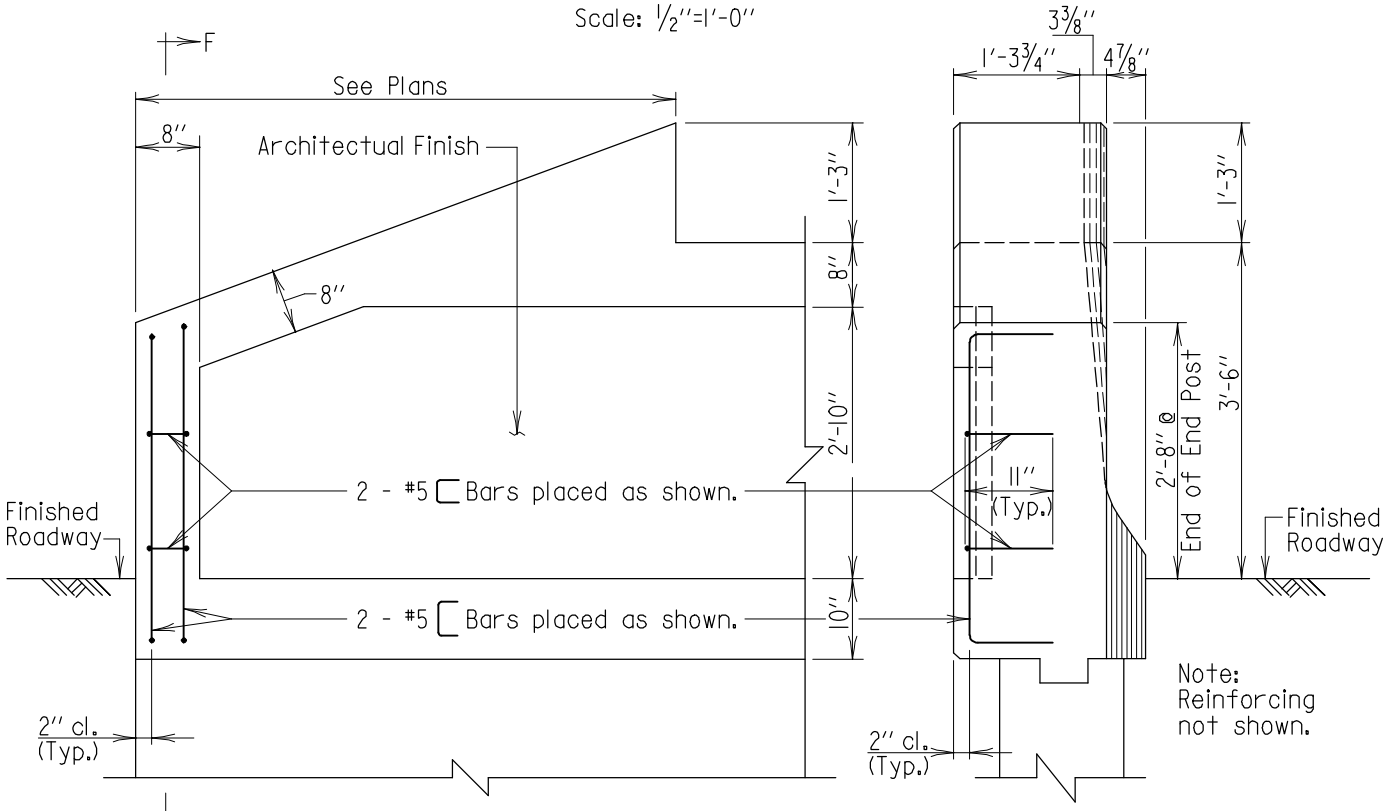

PARTIAL REAR ELEVATION
Scale: 1/2"=1'-0"

SECTION F-F
Scale: 1/2"=1'-0"

42" RECESSED BACK

Notes:
1. Taper of coping to begin at concrete lug.
2. There is no View E-E for the 42" Recessed Back End Post.

APPROVAL	
E.S. Freedman DIRECTOR OFFICE OF STRUCTURES DATE: 6/1/05	
REVISIONS	
SHA	FHWA
11-14-05	
12-22-14	
FHWA APPROVAL	
DATE:	

STATE OF MARYLAND
DEPARTMENT OF TRANSPORTATION
STATE HIGHWAY ADMINISTRATION
OFFICE OF STRUCTURES

42" F-SHAPE PARAPET END POST WITH FENCING OR RAILING
APPROACH END, END POST LENGTH > 11'-2"

STANDARD NO. SUB-EP(42F)-101 SHEET 4 OF 4

SUBSTRUCTURE - END POST

OLD NO. BR-SB(6.53)-05-368

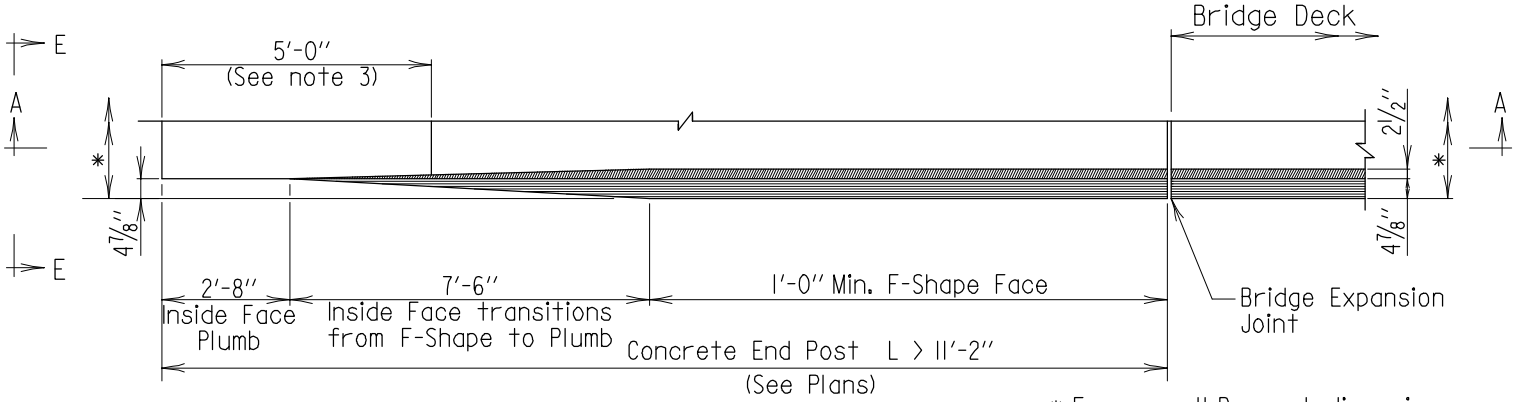

* For overall Parapet dimensions, see sheets 3 and 4 of 4.

PLAN

Scale: 1/4"=1'-0"

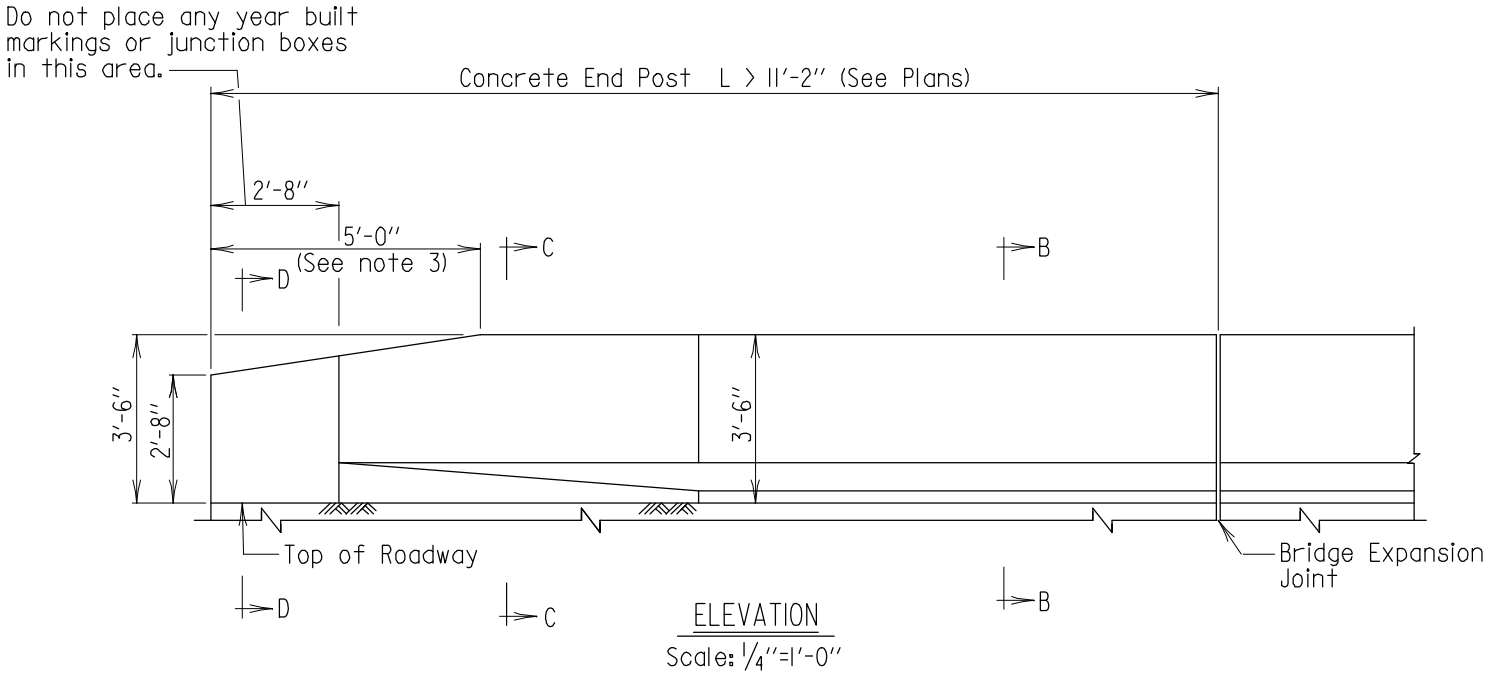

ELEVATION

Scale: 1/4"=1'-0"

Notes:

1. Use on the approach end of bridge when end post length is greater than 11'-2".
2. Thrie Beam Traffic Barrier not shown.
3. Taper barrier height to 2'-8" when Thrie Beam is required. Continue at 3'-6" and eliminate transition of F-Shape when adjacent to concrete F-Shape barrier.

Note to Designer:
This standard contains details for straight back, diamond back and recessed back parapets. Include the appropriate shape in the Contract Plans.

FHWA APPROVAL
DATE:

APPROVAL
DIRECTOR
OFFICE OF STRUCTURES
DATE: 6/1/05

REVISIONS
SHA
FHWA

STATE OF MARYLAND
DEPARTMENT OF TRANSPORTATION
STATE HIGHWAY ADMINISTRATION
OFFICE OF STRUCTURES

42" F-SHAPE PARAPET END POST WITHOUT FENCING OR RAILING
APPROACH END, END POST LENGTH > 11'-2"

STANDARD NO. SUB-EP(42F)-102

SHEET 1 OF 4

OLD NO. BR-SB(6.54)-05-369

SUBSTRUCTURE - END POST

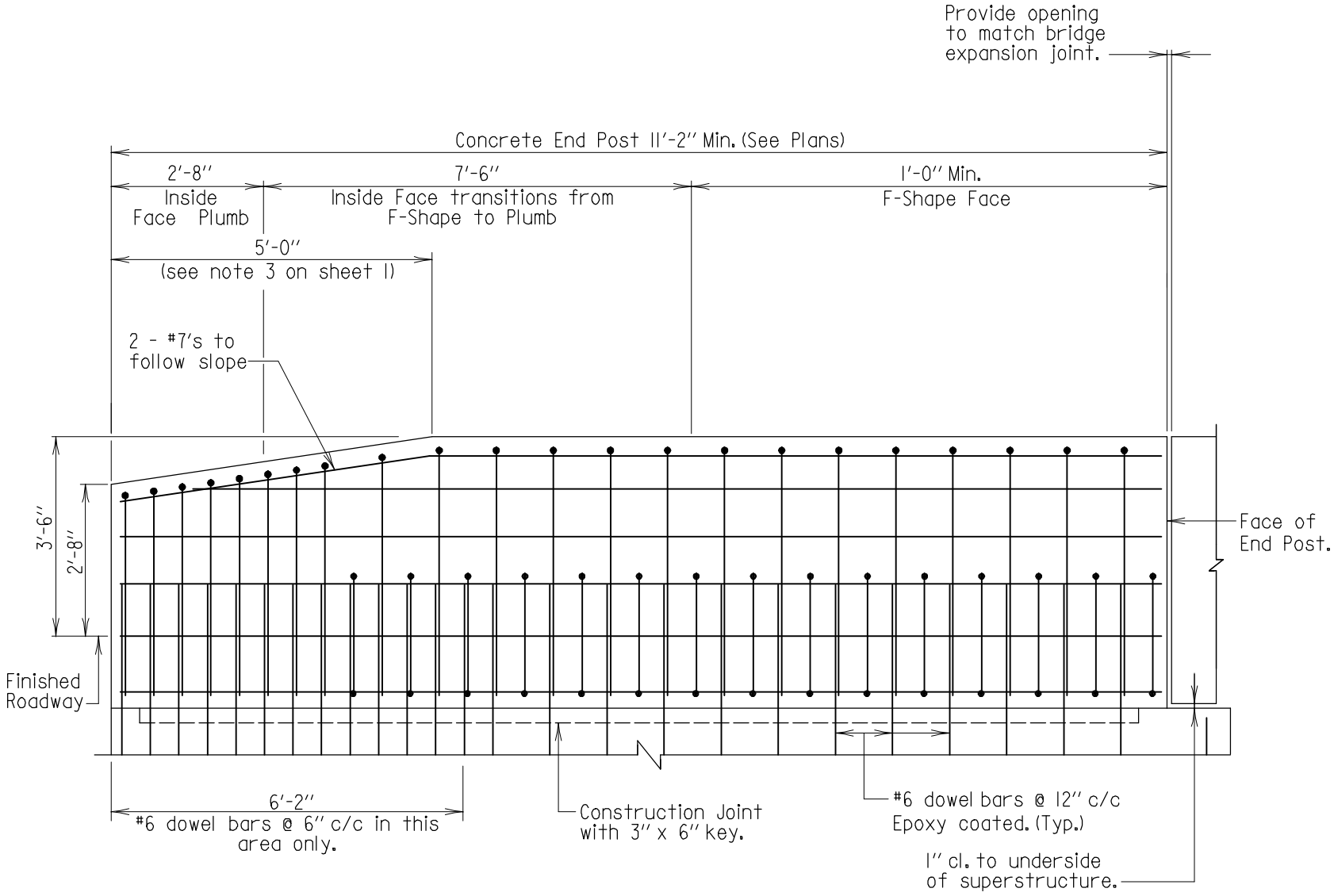

SECTION A-A

Scale: 3/8"=1'-0"

Notes:
1. For Parapet Reinforcing Details, see sheets 3 and 4.
2. If applicable, reinforcing for coping not shown.

Note to Designer:
This standard contains details for straight back, diamond back and recessed back parapets. Include the appropriate shape in the Contract Plans.

APPROVAL
DIRECTOR
OFFICE OF STRUCTURES
DATE: 6/1/05

REVISIONS

SHA	11-14-05
FHWA	

FHWA APPROVAL
DATE:

STATE OF MARYLAND
DEPARTMENT OF TRANSPORTATION
STATE HIGHWAY ADMINISTRATION
OFFICE OF STRUCTURES

42" F-SHAPE PARAPET END POST WITHOUT
FENCING OR RAILING
APPROACH END, END POST LENGTH > 11'-2"

STANDARD NO. SUB-EP(42F)-102

SHEET 2 **OF** 4

OLD NO. BR-SB(6.54)-05-369

SUBSTRUCTURE - END POST

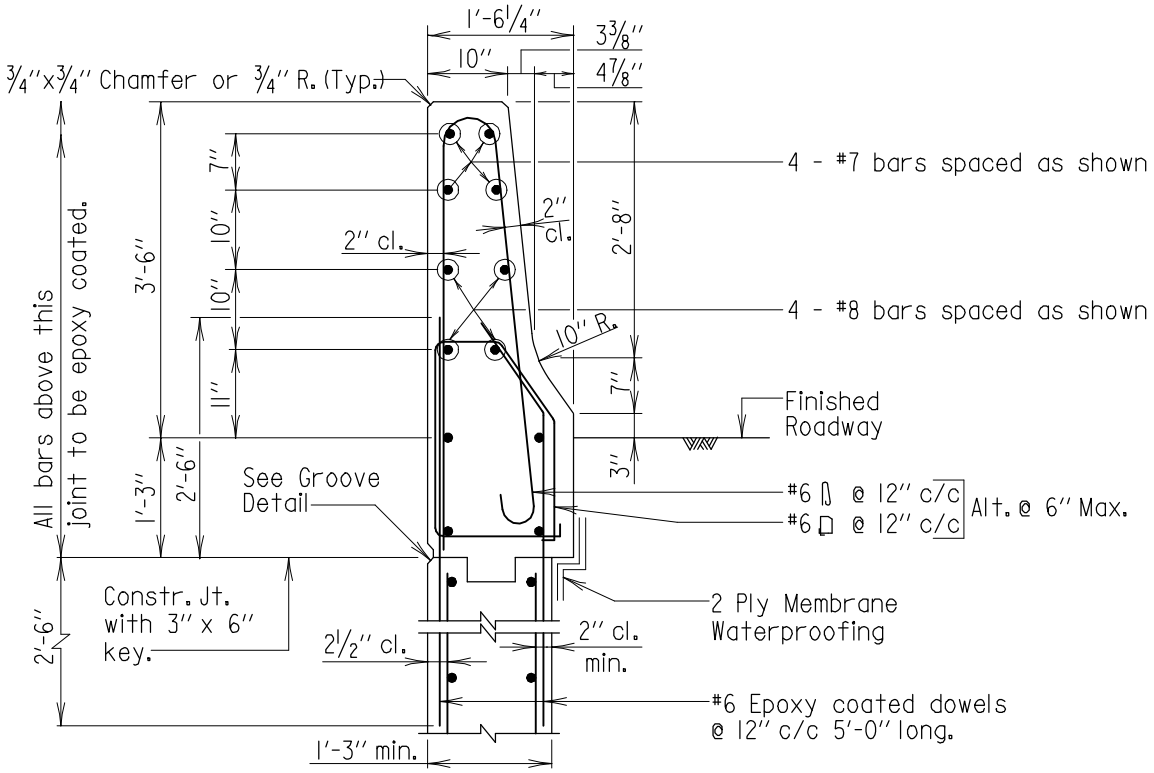

SECTION B-B

Scale: 1/2"=1'-0"

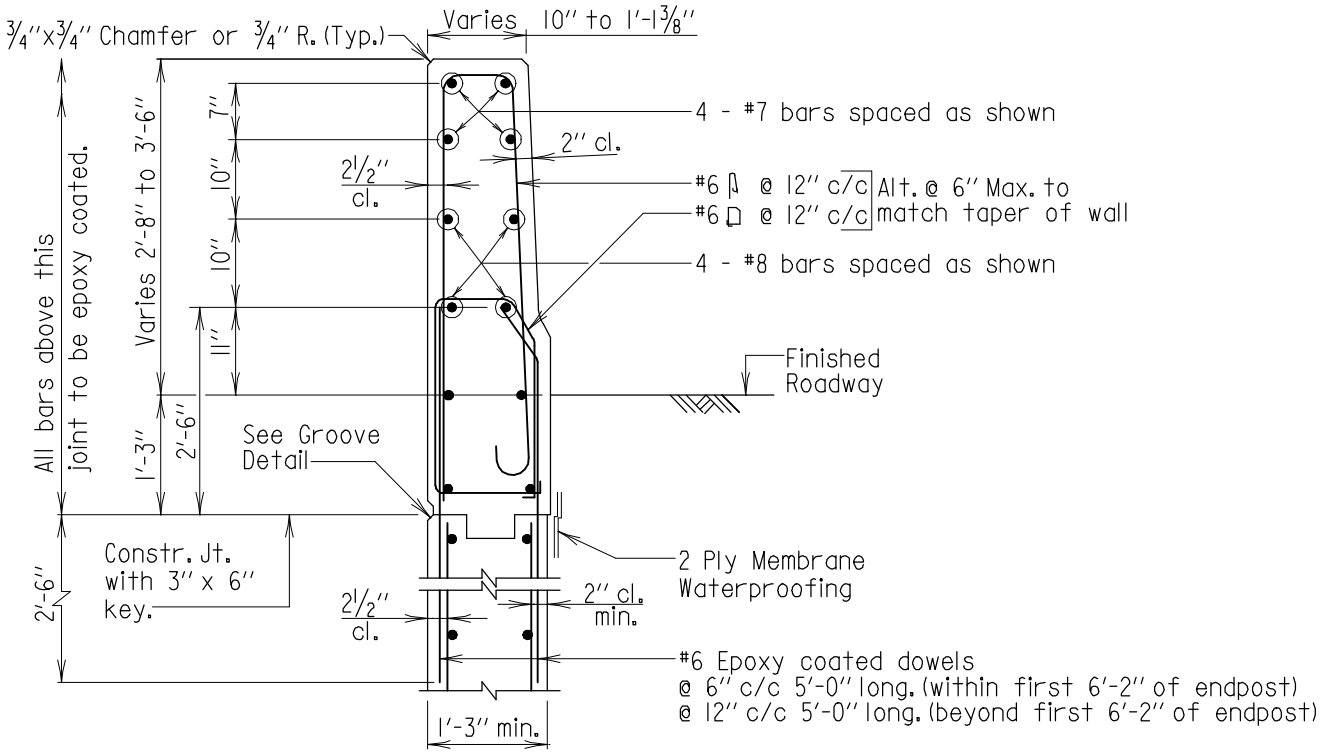

SECTION C-C

Scale: 1/2"=1'-0"

42" STRAIGHT BACK

Note:
All longitudinal bars are #5 spaced as shown, unless noted otherwise.

APPROVAL	
E.S. Freedman DIRECTOR OFFICE OF STRUCTURES DATE: 6/1/05	
REVISIONS	
SHA	FHWA
11-14-05	
6-27-14	
12-22-14	

FHWA APPROVAL
DATE:

STATE OF MARYLAND
DEPARTMENT OF TRANSPORTATION
STATE HIGHWAY ADMINISTRATION
OFFICE OF STRUCTURES

42" F-SHAPE PARAPET END POST WITHOUT FENCING OR RAILING
APPROACH END, END POST LENGTH > 11'-2"

STANDARD NO. SUB-EP(42F)-102 SHEET 3 OF 4

SUBSTRUCTURE - END POST

OLD NO. BR-SB(6.54)-05-369

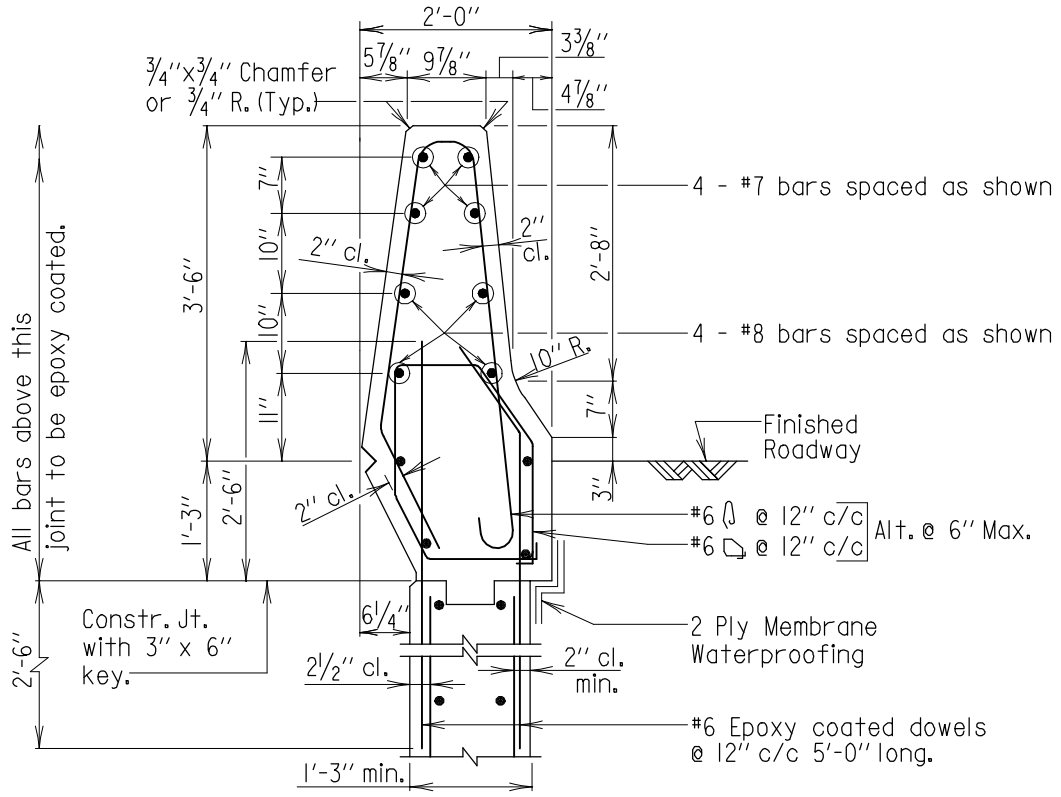

SECTION B-B

Scale: 1/2"=1'-0"

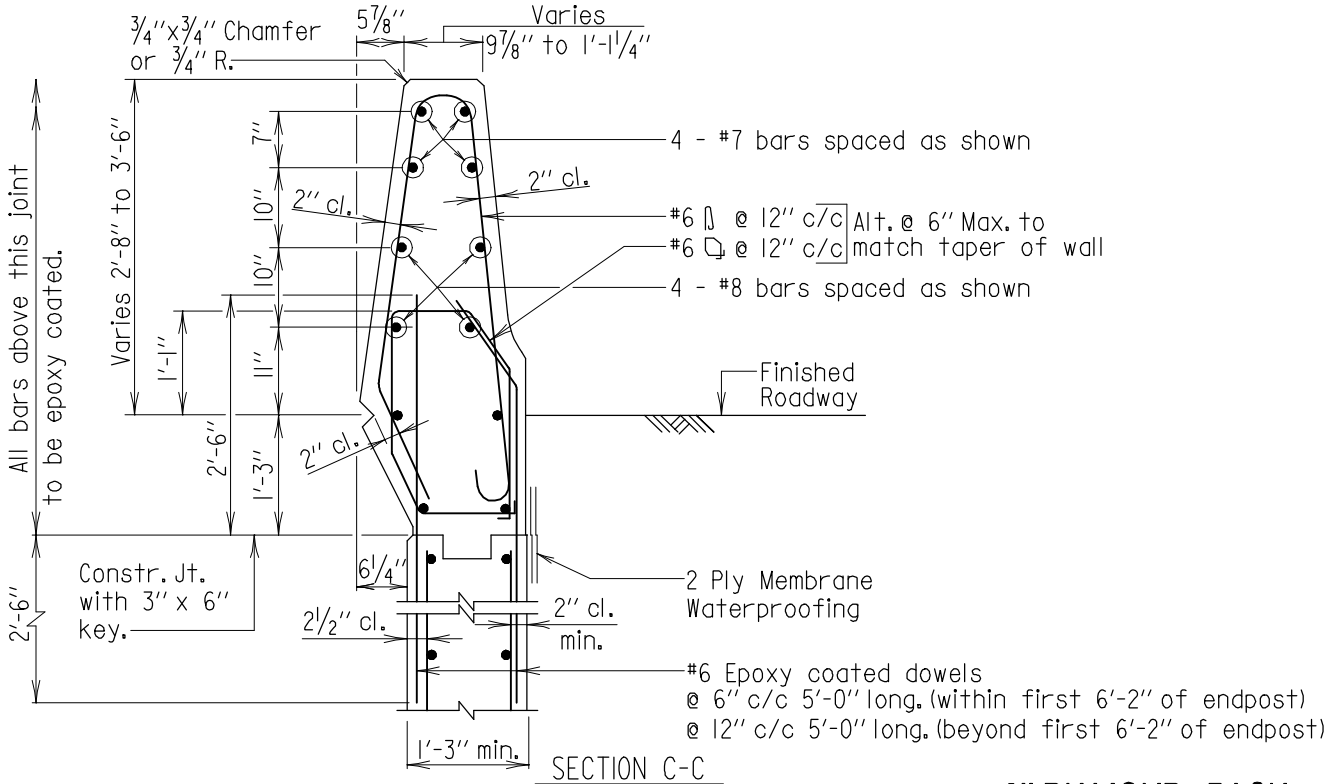

SECTION C-C

Scale: 1/2"=1'-0"

42" DIAMOND BACK

Note:
All longitudinal bars are #5 spaced as shown, unless noted otherwise.

APPROVAL	
DIRECTOR OFFICE OF STRUCTURES DATE: 6/1/05	
REVISIONS	
SHA	FHWA
11-14-05	
12-22-14	
FHWA APPROVAL	
DATE:	

STATE OF MARYLAND
DEPARTMENT OF TRANSPORTATION
STATE HIGHWAY ADMINISTRATION
OFFICE OF STRUCTURES

42" F-SHAPE PARAPET END POST WITHOUT FENCING OR RAILING
APPROACH END, END POST LENGTH > 11'-2"

STANDARD NO. SUB-EP(42F)-102 SHEET 3 OF 4

SUBSTRUCTURE - END POST

OLD NO. BR-SB(6.54)-05-369

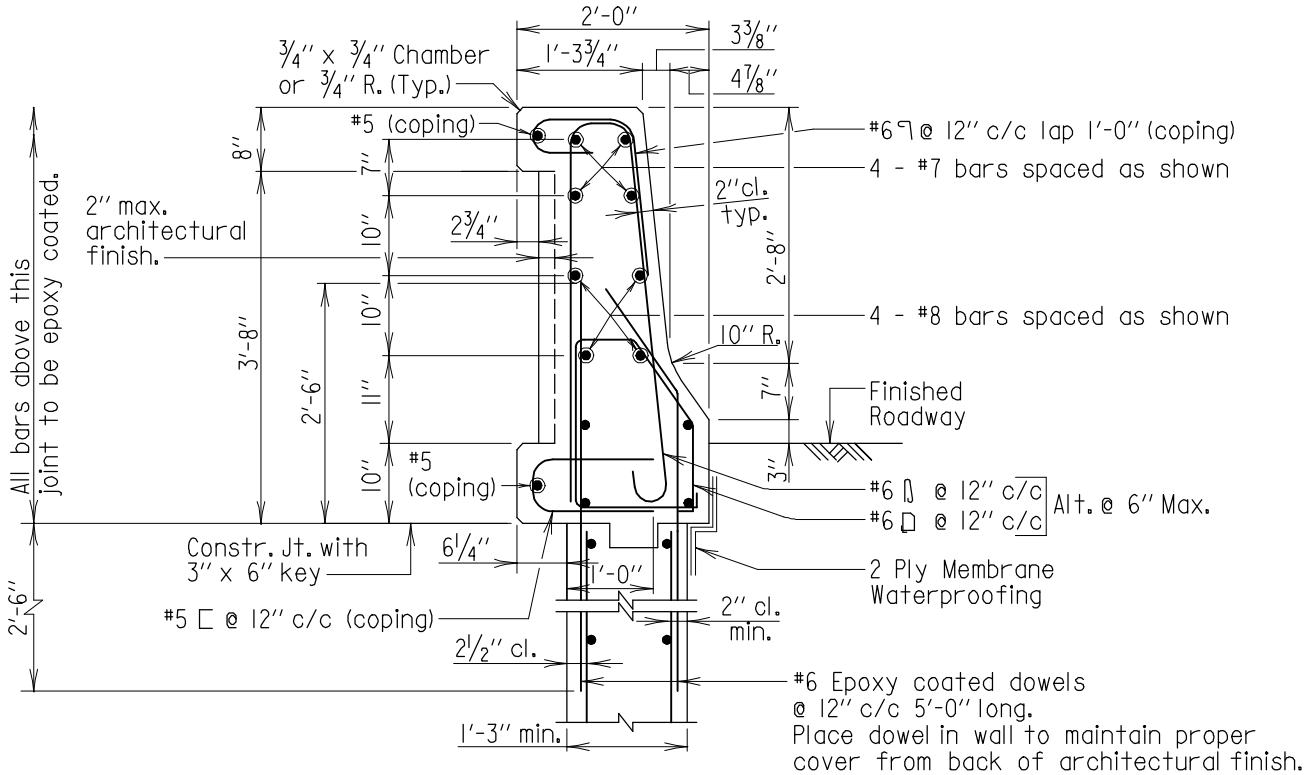

SECTION B-B

Scale: ½"=1'-0"

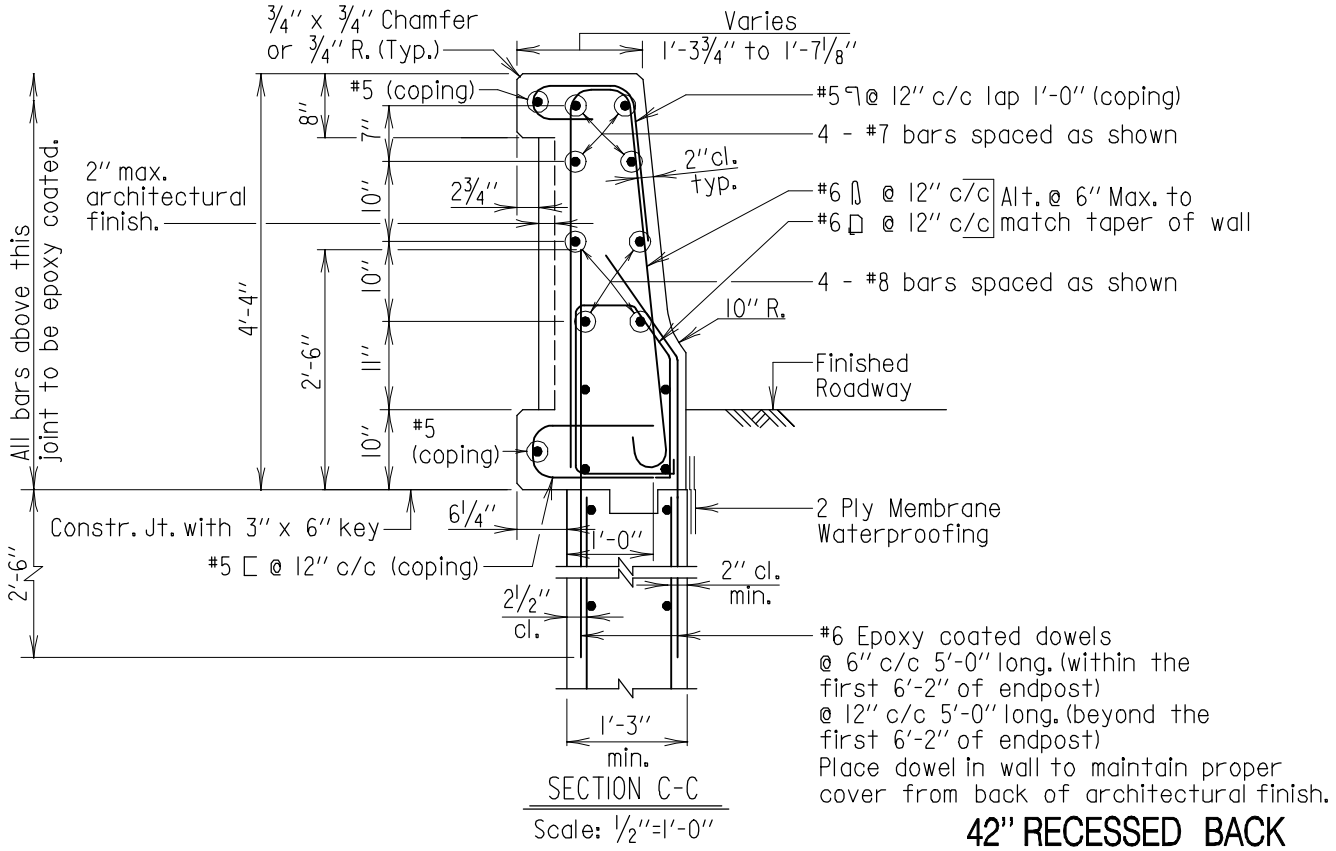

SECTION C-C

Scale: ½"=1'-0"

42" RECESSED BACK

Note:
All longitudinal bars are #5's placed as shown, unless noted otherwise.

APPROVAL	
DIRECTOR OFFICE OF STRUCTURES	
DATE: 6/1/05	
REVISIONS	
SHA	FHWA
11-14-05	
12-12-08	
12-22-14	
FHWA APPROVAL	
DATE:	

STATE OF MARYLAND
DEPARTMENT OF TRANSPORTATION
STATE HIGHWAY ADMINISTRATION
OFFICE OF STRUCTURES

42" F-SHAPE PARAPET END POST WITHOUT FENCING OR RAILING
APPROACH END, END POST LENGTH > 11'-2"

STANDARD NO. SUB-EP(42F)-102 SHEET 3 OF 4

SUBSTRUCTURE - END POST

OLD NO. BR-SB(6.54)-05-369

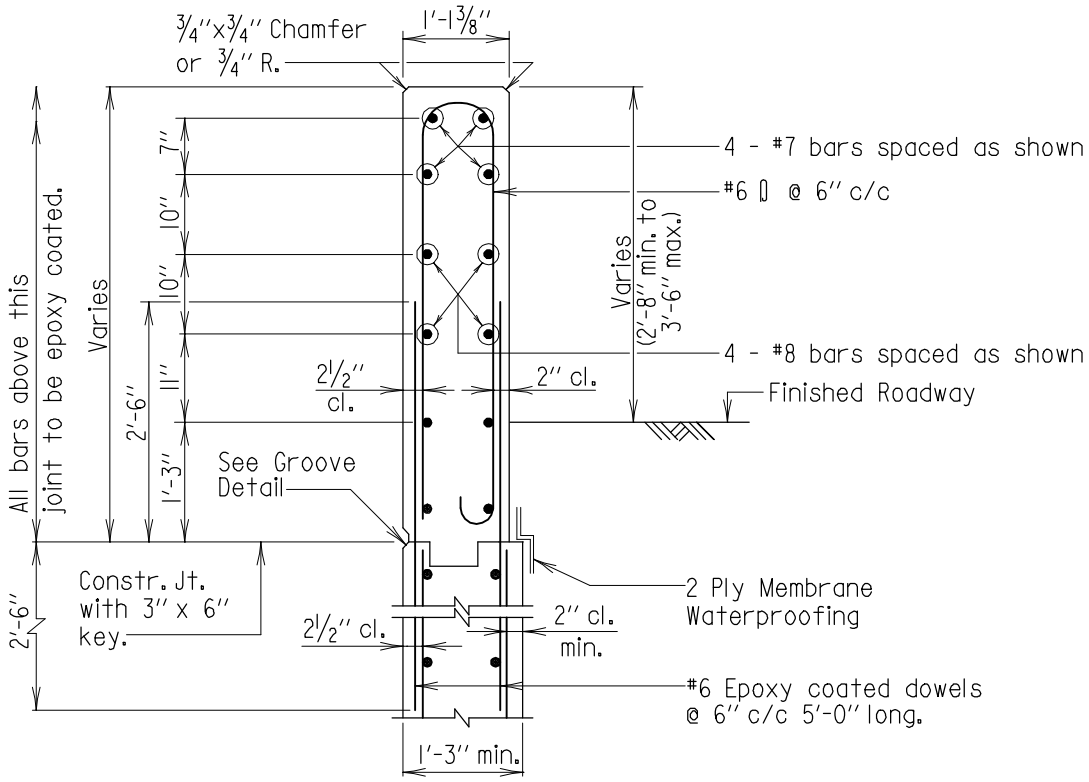

Note:
All longitudinal bars are #5 spaced as shown, unless noted otherwise.

SECTION D-D

Scale: 1/2"=1'-0"

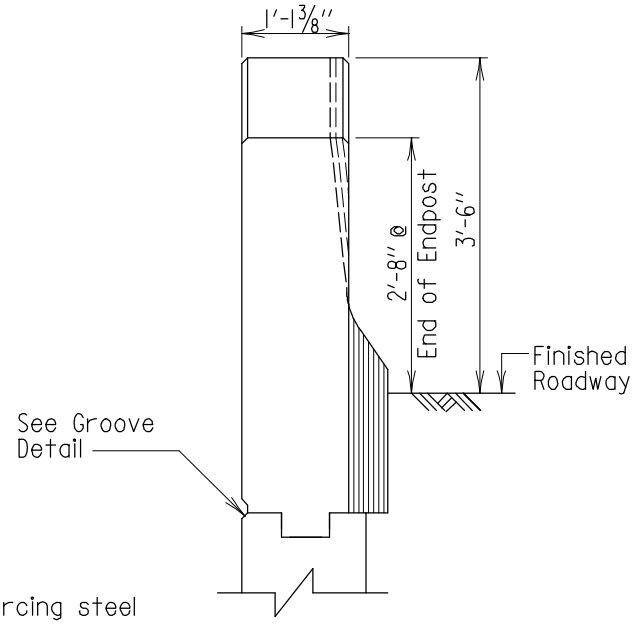

Note:
Reinforcing steel not shown.

VIEW E-E

Scale: 1/2"=1'-0"

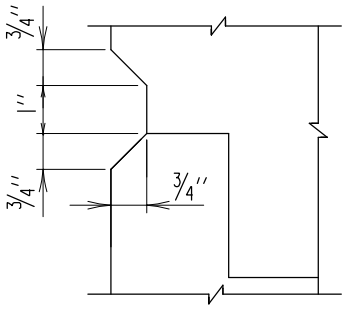

GROOVE DETAIL

Scale: 3"=1'-0"

42" STRAIGHT BACK

APPROVAL		
E.S. Freedman DIRECTOR OFFICE OF STRUCTURES DATE: 6/1/05		
REVISIONS		
	SHA	FHWA
	11-14-05	
	6-27-14	
FHWA APPROVAL	12-22-14	
DATE:		

STATE OF MARYLAND
DEPARTMENT OF TRANSPORTATION
STATE HIGHWAY ADMINISTRATION
OFFICE OF STRUCTURES

42" F-SHAPE PARAPET END POST WITHOUT FENCING OR RAILING
APPROACH END, END POST LENGTH > 11'-2"

STANDARD NO. SUB-EP(42F)-102 SHEET 4 OF 4

SUBSTRUCTURE - END POST

OLD NO. BR-SB(6.54)-05-369

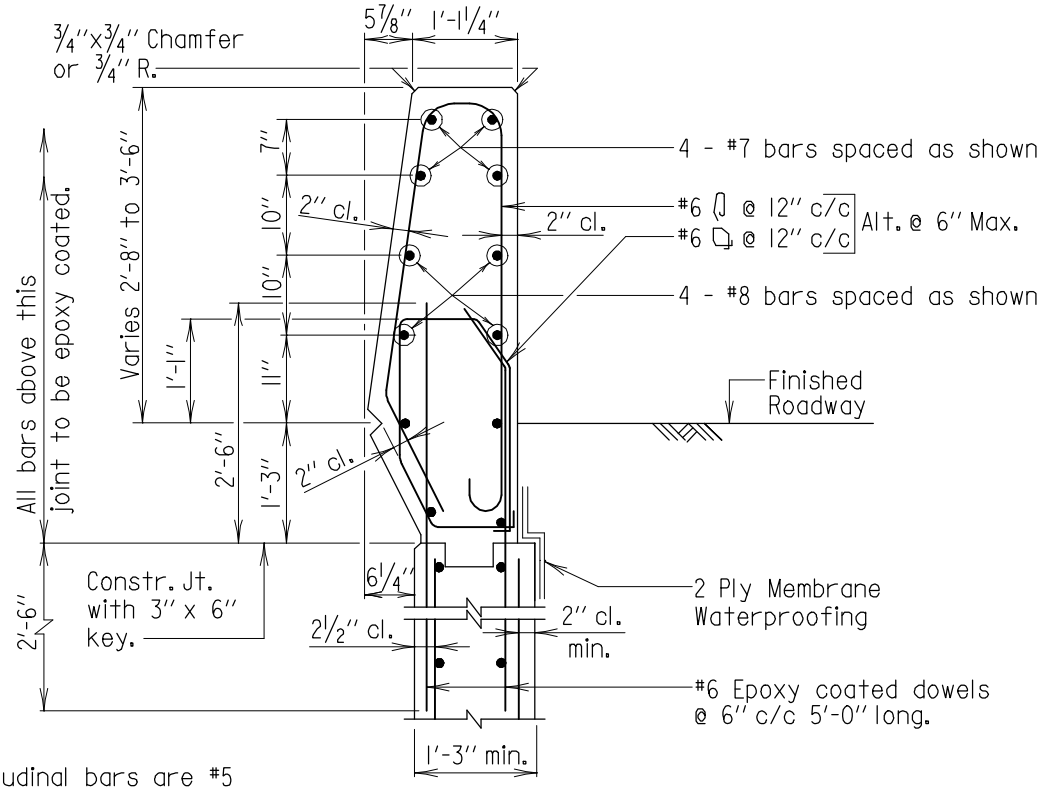

Note:
All longitudinal bars are #5 spaced as shown, unless noted otherwise.

SECTION D-D
Scale: 1/2"=1'-0"

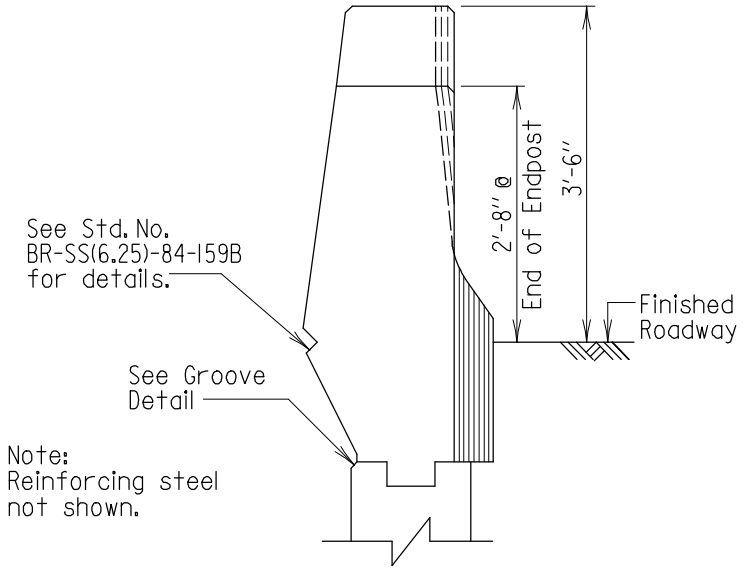

Note:
Reinforcing steel not shown.

VIEW E-E
Scale: 1/2"=1'-0"

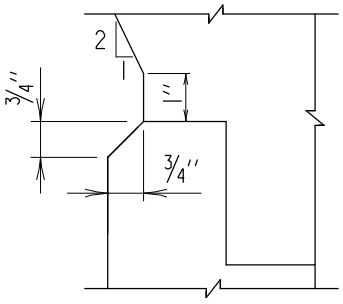

GROOVE DETAIL
Scale: 3"=1'-0"

42" DIAMOND BACK

APPROVAL	
E.S. Freedman DIRECTOR OFFICE OF STRUCTURES DATE: 6/1/05	
REVISIONS	
SHA	FHWA
11-14-05	
12-22-14	
FHWA APPROVAL	
DATE:	

STATE OF MARYLAND
DEPARTMENT OF TRANSPORTATION
STATE HIGHWAY ADMINISTRATION
OFFICE OF STRUCTURES

42" F-SHAPE PARAPET END POST WITHOUT FENCING OR RAILING
APPROACH END, END POST LENGTH > 11'-2"

STANDARD NO. SUB-EP(42F)-102 SHEET 4 OF 4

SUBSTRUCTURE - END POST

OLD NO. BR-SB(6.54)-05-369

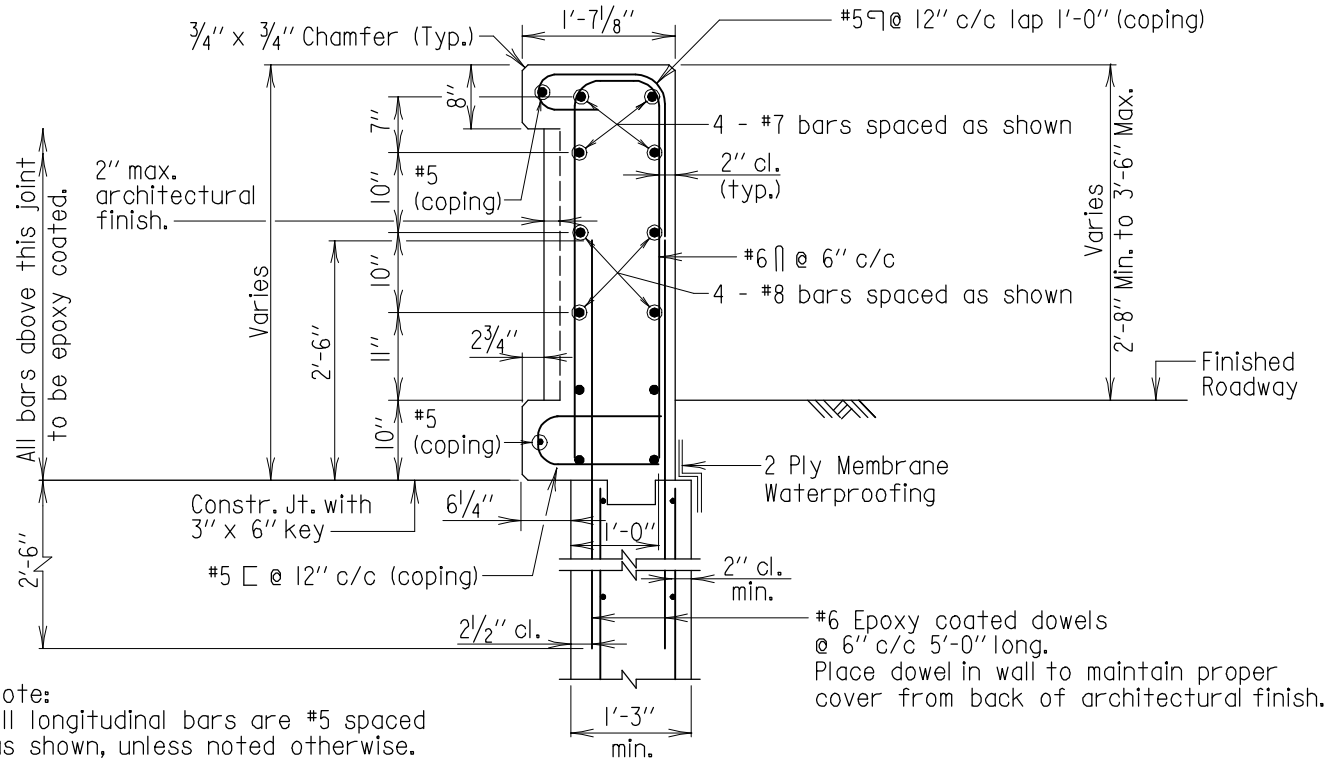

Note:
All longitudinal bars are #5 spaced as shown, unless noted otherwise.

SECTION D-D

Scale: 1/2"=1'-0"

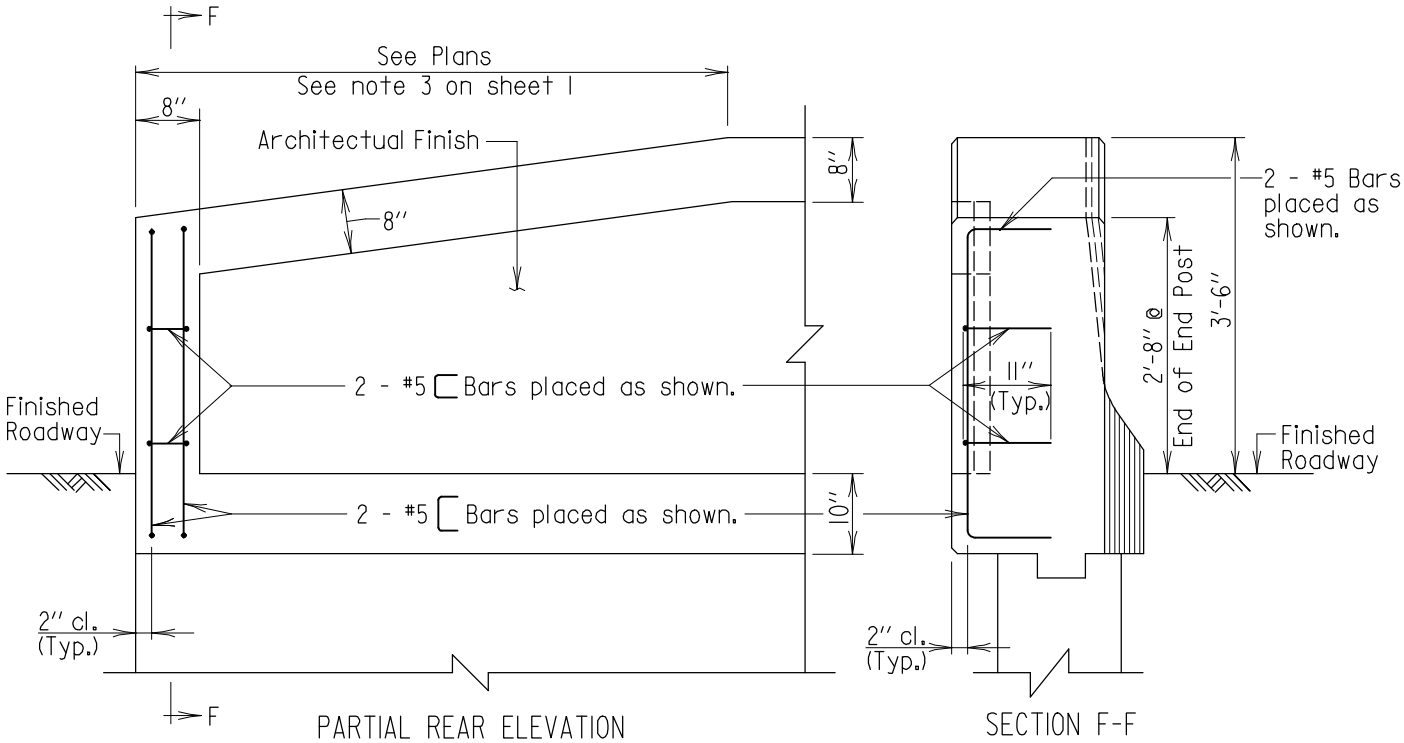

PARTIAL REAR ELEVATION

Scale: 1/2"=1'-0"

SECTION F-F

Scale: 1/2"=1'-0"

Notes:
1. Reinforcing steel not shown.
2. There is no View E-E for the 42" Recessed Back End Post.

42" RECESSED BACK

APPROVAL	
E.S. Freedman DIRECTOR OFFICE OF STRUCTURES DATE: 6/1/05	
REVISIONS	
SHA	FHWA
11-14-05	
12-22-14	
FHWA APPROVAL	
DATE:	

STATE OF MARYLAND
DEPARTMENT OF TRANSPORTATION
STATE HIGHWAY ADMINISTRATION
OFFICE OF STRUCTURES

42" F-SHAPE PARAPET END POST WITHOUT FENCING OR RAILING
APPROACH END, END POST LENGTH > 11'-2"

STANDARD NO. SUB-EP(42F)-102 SHEET 4 OF 4

SUBSTRUCTURE - END POST

OLD NO. BR-SB(6.54)-05-369

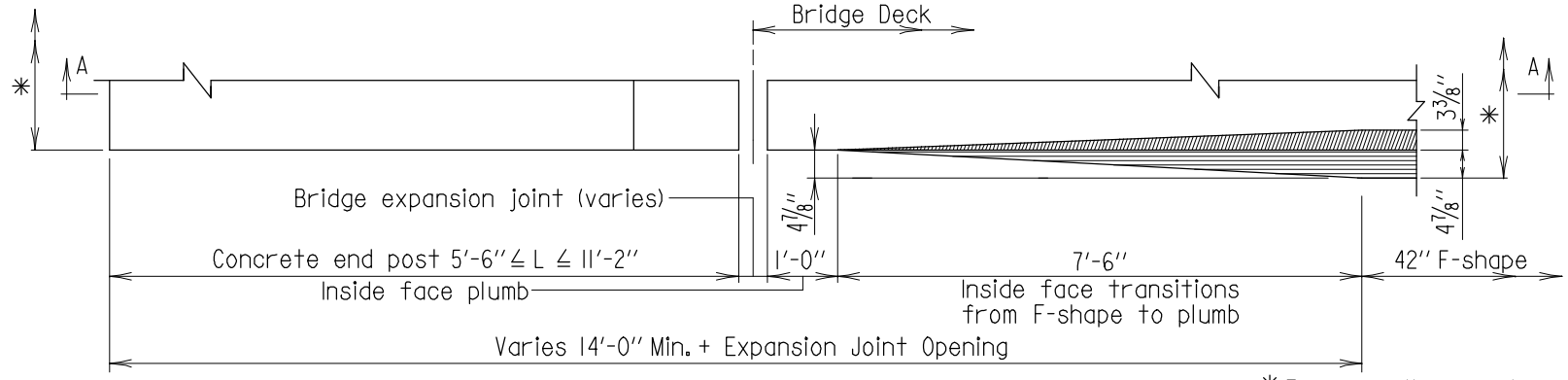

PLAN

Scale: 3/8'' = 1'-0''

*For overall parapet dimension see sheets 3 and 4.

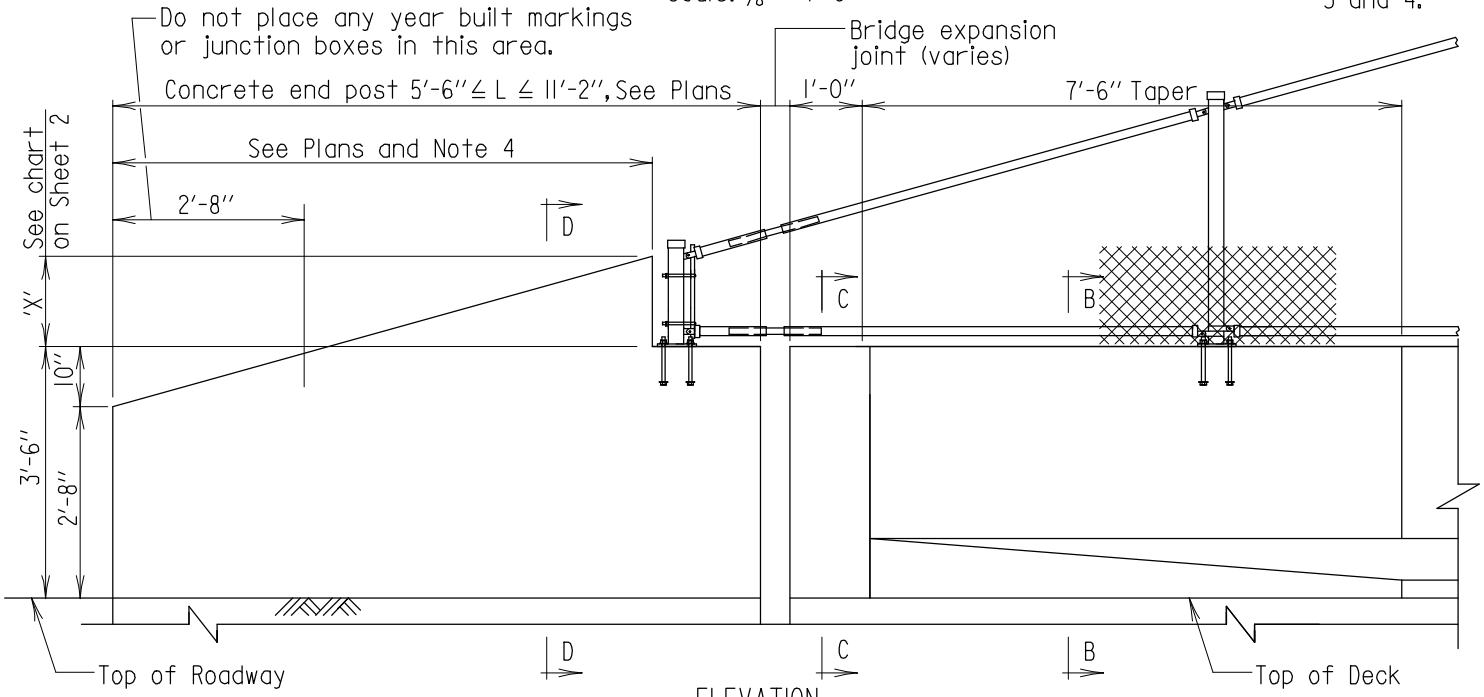

ELEVATION

Scale: 3/8'' = 1'-0''

Notes:

1. Use on the approach end of bridge when end post length is less than 11'-2''.
2. Thrie Beam Traffic Barrier not shown.
3. Type II fence shown, see Plans for fence or railing layout and details.
4. Taper barrier height to 2'-8'' when Thrie Beam is required. Taper barrier height to 2'-10'' and eliminate F-Shape transition when adjacent to concrete F-Shape barrier.

Note to Designer:
This standard contains details for straight back, diamond back and recessed back parapets. Include the appropriate shape in the Contract Plans.

APPROVAL
DIRECTOR
OFFICE OF STRUCTURES
DATE: 6/1/05

REVISIONS
SHA
FHWA

FHWA APPROVAL
DATE:

STATE OF MARYLAND
DEPARTMENT OF TRANSPORTATION
STATE HIGHWAY ADMINISTRATION
OFFICE OF STRUCTURES

42'' F-SHAPE END POST WITH FENCING OR RAILING
(END POST LENGTH < = 11'-2'')

STANDARD NO. SUB-EP(42)-103

SHEET 1 OF 4

OLD NO. BR-SB(6.57)-05-372

SUBSTRUCTURE - END POST

'X'	Fence or Railing Type
1'-0''	One Strand Railing
1'-3''	Type II Fence
1'-9''	Two Strand Railing

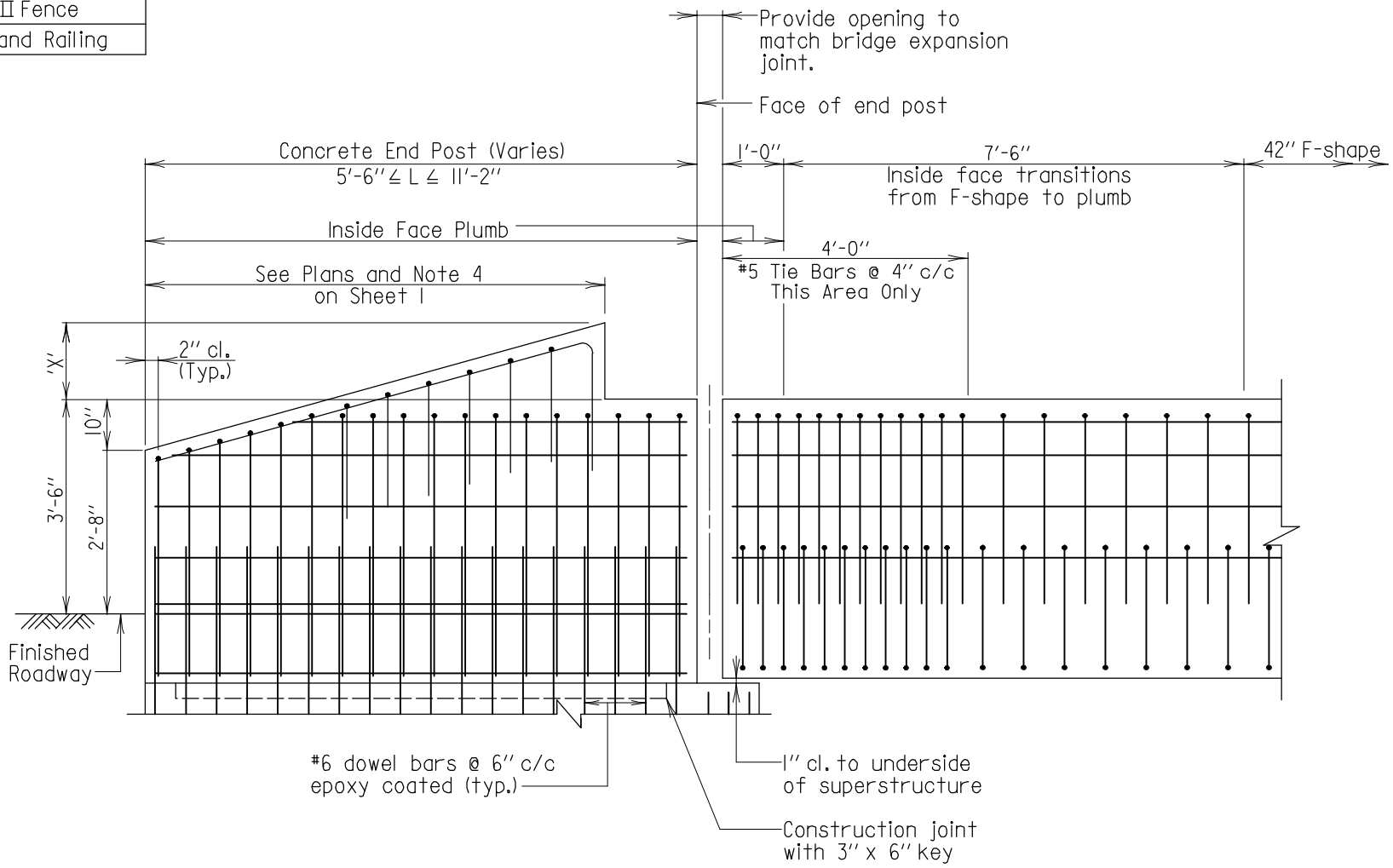

SECTION A-A

Scale: 3/8'' = 1'-0''

Notes:
1. For parapet reinforcing details see sheets 3 and 4.
2. If applicable, reinforcing for coping not shown.
3. Normal deck reinforcing not shown.
4. Fencing or railing not shown.

Note to Designer:
This standard contains details for straight back, diamond back and recessed back parapets. Include the appropriate shape in the Contract Plans.

APPROVAL
DIRECTOR OFFICE OF STRUCTURES
DATE: 6/1/05

REVISIONS
SHA 11-14-05
FHWA

FHWA APPROVAL
DATE:

STATE OF MARYLAND
DEPARTMENT OF TRANSPORTATION
STATE HIGHWAY ADMINISTRATION
OFFICE OF STRUCTURES

42'' F-SHAPE END POST WITH FENCING OR RAILING
(END POST LENGTH < = 11'-2'')

STANDARD NO. SUB-EP(42F)-103

SHEET 2 OF 4

OLD NO. BR-SB(6.57)-05-372

SUBSTRUCTURE - END POST

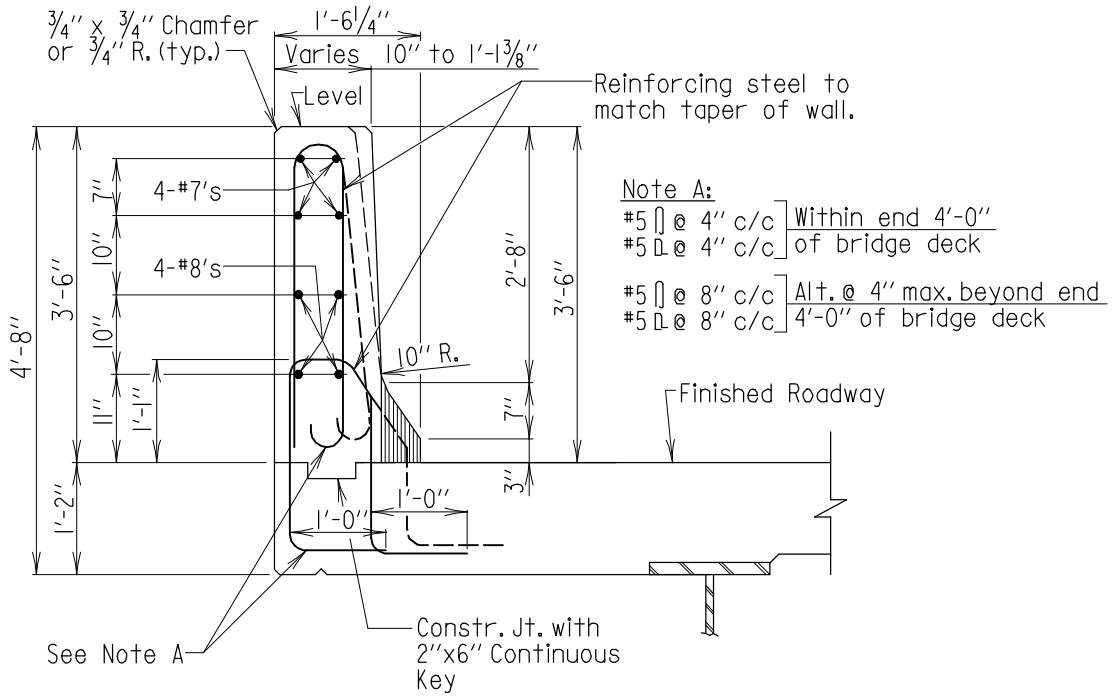

SECTION B-B

Scale: 1/2''=1'-0''

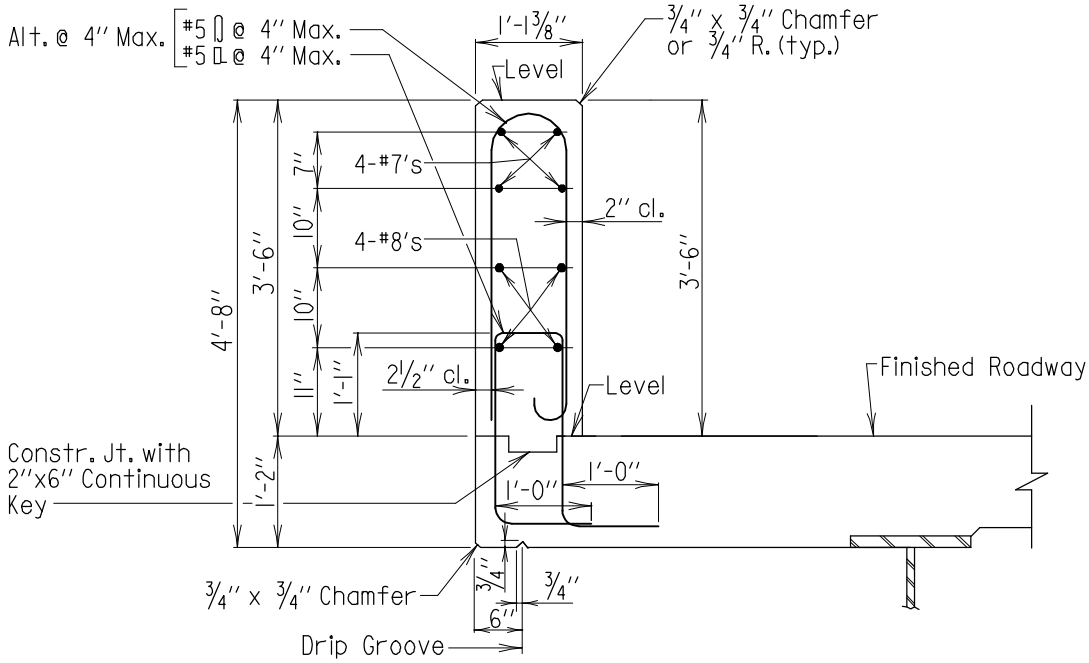

SECTION C-C

Scale: 1/2''=1'-0''

42'' STRAIGHT BACK

Note:
Normal deck reinforcing not shown.

APPROVAL	
R.S. Freedman DIRECTOR OFFICE OF STRUCTURES	
DATE: 6/1/05	
REVISIONS	
SHA	FHWA

FHWA APPROVAL
DATE:

STATE OF MARYLAND
DEPARTMENT OF TRANSPORTATION
STATE HIGHWAY ADMINISTRATION
OFFICE OF STRUCTURES

42'' F-SHAPE END POST WITH FENCING OR RAILING
(END POST LENGTH < = 11'-2'')

STANDARD NO. SUB-EP(42F)-103 SHEET 3 OF 4

SUBSTRUCTURE - END POST

OLD NO. BR-SB(6.57)-05-372

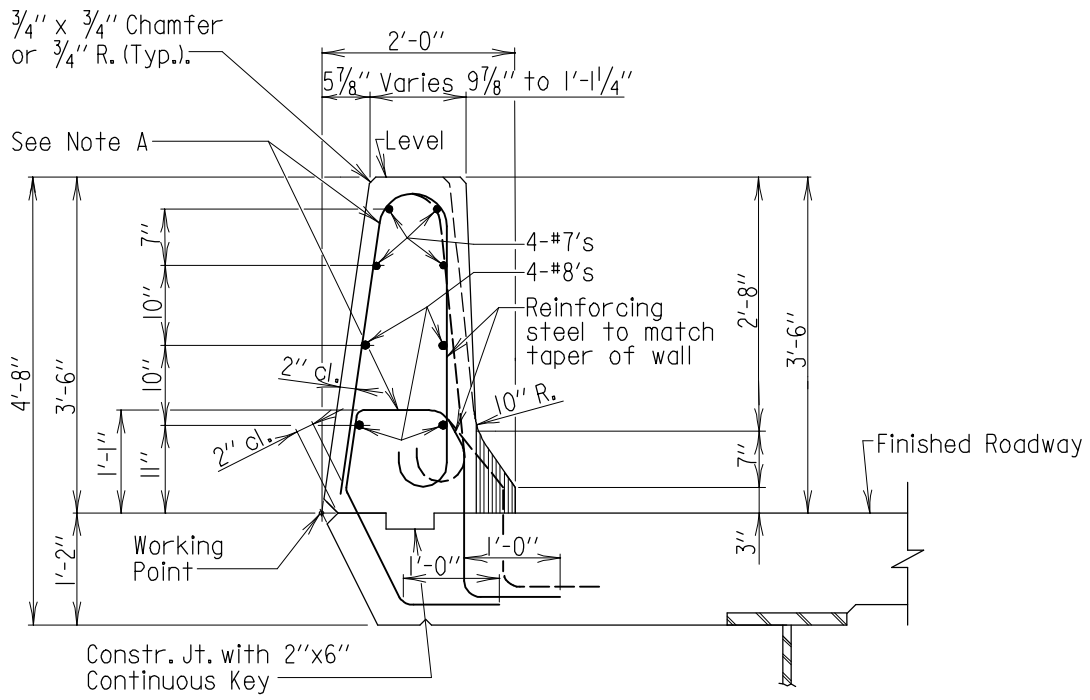

SECTION B-B

Scale: 1/2" = 1'-0"

Note A:

#5 ∩ @ 4" c/c
#5 ⊂ @ 4" c/c
Within end 4'-0" of bridge deck

#5 ∩ @ 8" c/c
#5 ⊂ @ 8" c/c
Alt. @ 4" max. beyond end 4'-0" of bridge deck

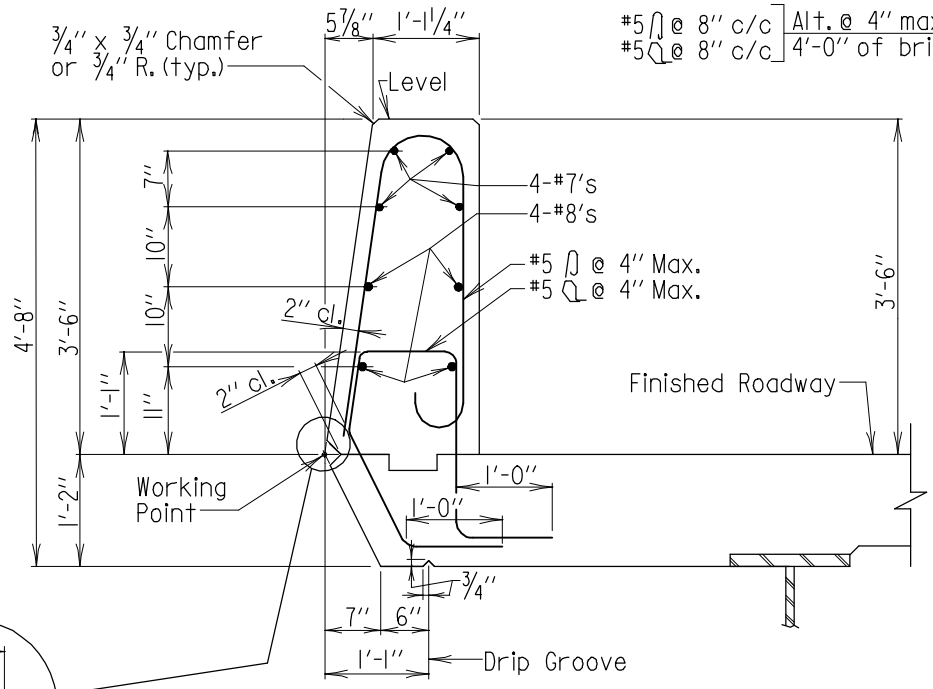

SECTION C-C

Scale: 1/2" = 1'-0"

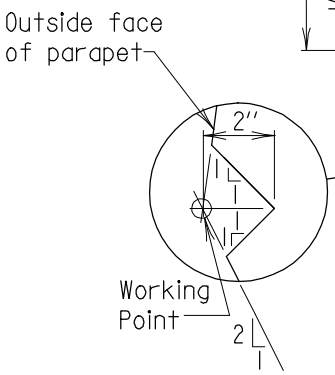

42" DIAMOND BACK

Note:
Normal deck reinforcing not shown.

APPROVAL	
R.S. Freedman DIRECTOR OFFICE OF STRUCTURES	
DATE: 6/1/05	
REVISIONS	
SHA	FHWA

FHWA APPROVAL
DATE:

STATE OF MARYLAND
DEPARTMENT OF TRANSPORTATION
STATE HIGHWAY ADMINISTRATION
OFFICE OF STRUCTURES

42" F-SHAPE END POST WITH FENCING OR RAILING
(END POST LENGTH < = 11'-2")

STANDARD NO. SUB-EP(42F)-103 SHEET 3 OF 4

SUBSTRUCTURE - END POST

OLD NO. BR-SB(6.57)-05-372

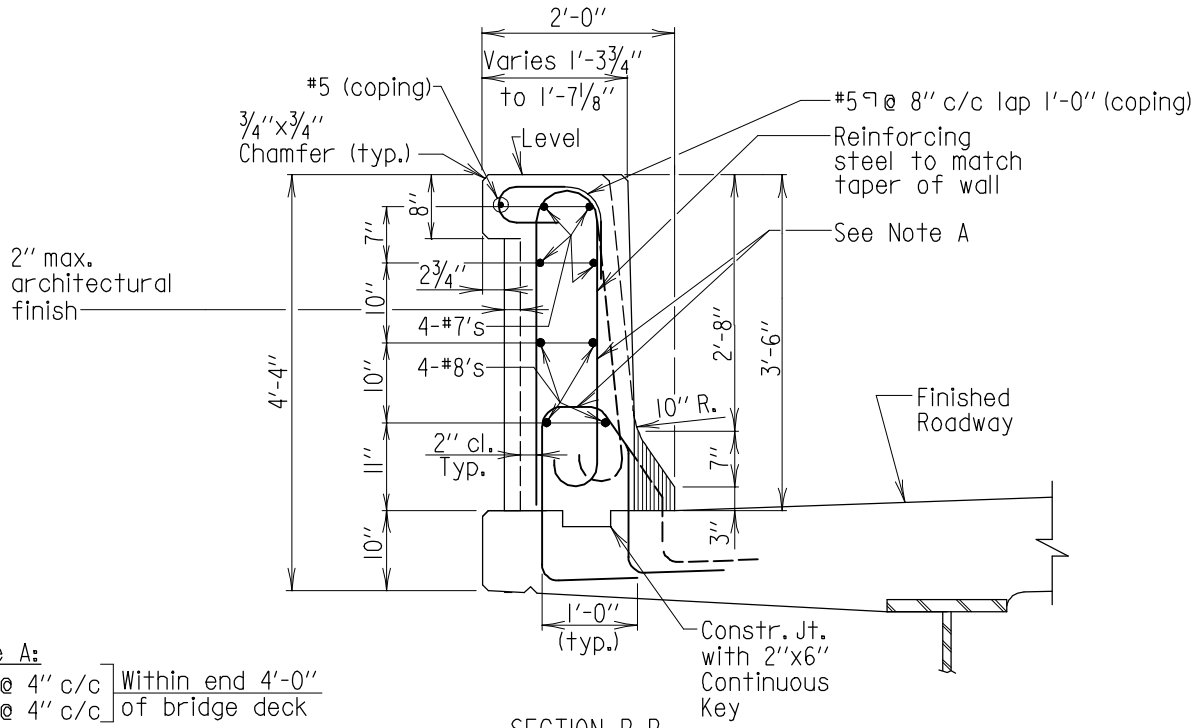

Note A:

#5 @ 4" c/c
#5 @ 4" c/c
Within end 4'-0" of bridge deck

#5 @ 8" c/c
#5 @ 8" c/c
Alt. @ 4" max. beyond end 4'-0" of bridge deck

SECTION B-B

Scale: ½"=1'-0"

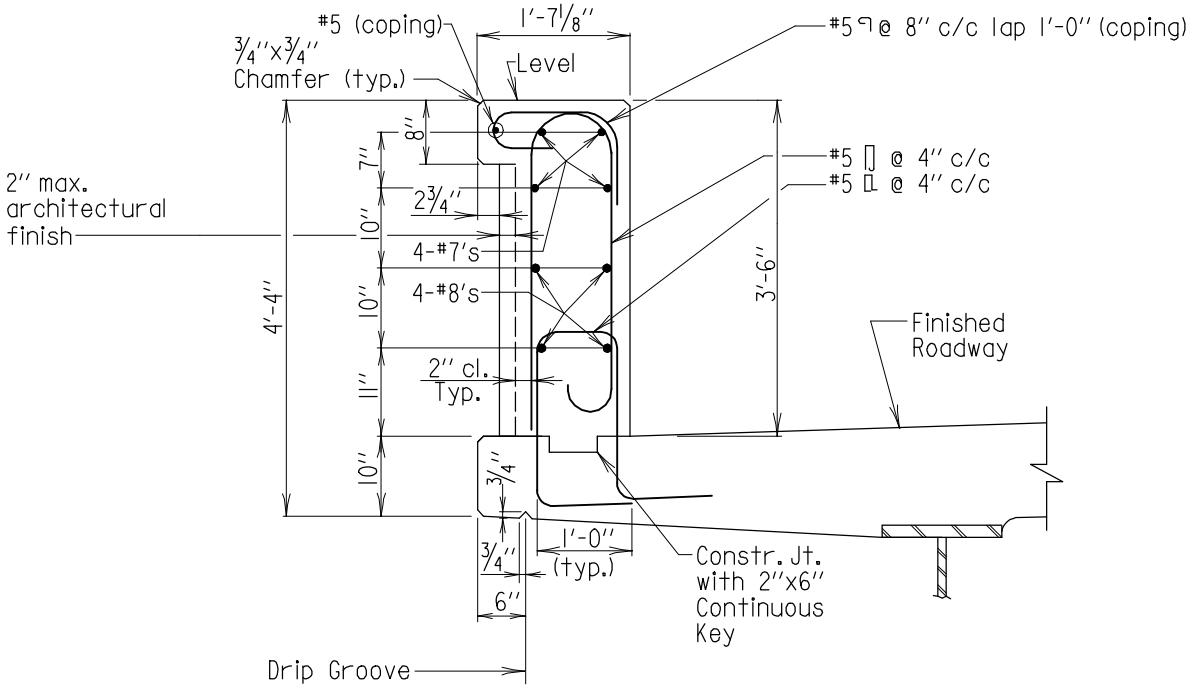

SECTION C-C

Scale: ½"=1'-0"

42" RECESSED BACK

Note:
Normal deck reinforcing not shown.

APPROVAL	
R.S. Freedman DIRECTOR OFFICE OF STRUCTURES DATE: 6/1/05	
REVISIONS	
SHA	FHWA

FHWA APPROVAL
DATE:

STATE OF MARYLAND
DEPARTMENT OF TRANSPORTATION
STATE HIGHWAY ADMINISTRATION
OFFICE OF STRUCTURES

42" F-SHAPE END POST WITH FENCING OR RAILING
(END POST LENGTH < = 11'-2")

STANDARD NO. SUB-EP(42F)-103 SHEET 3 OF 4

SUBSTRUCTURE - END POST

OLD NO. BR-SB(6.57)-05-372

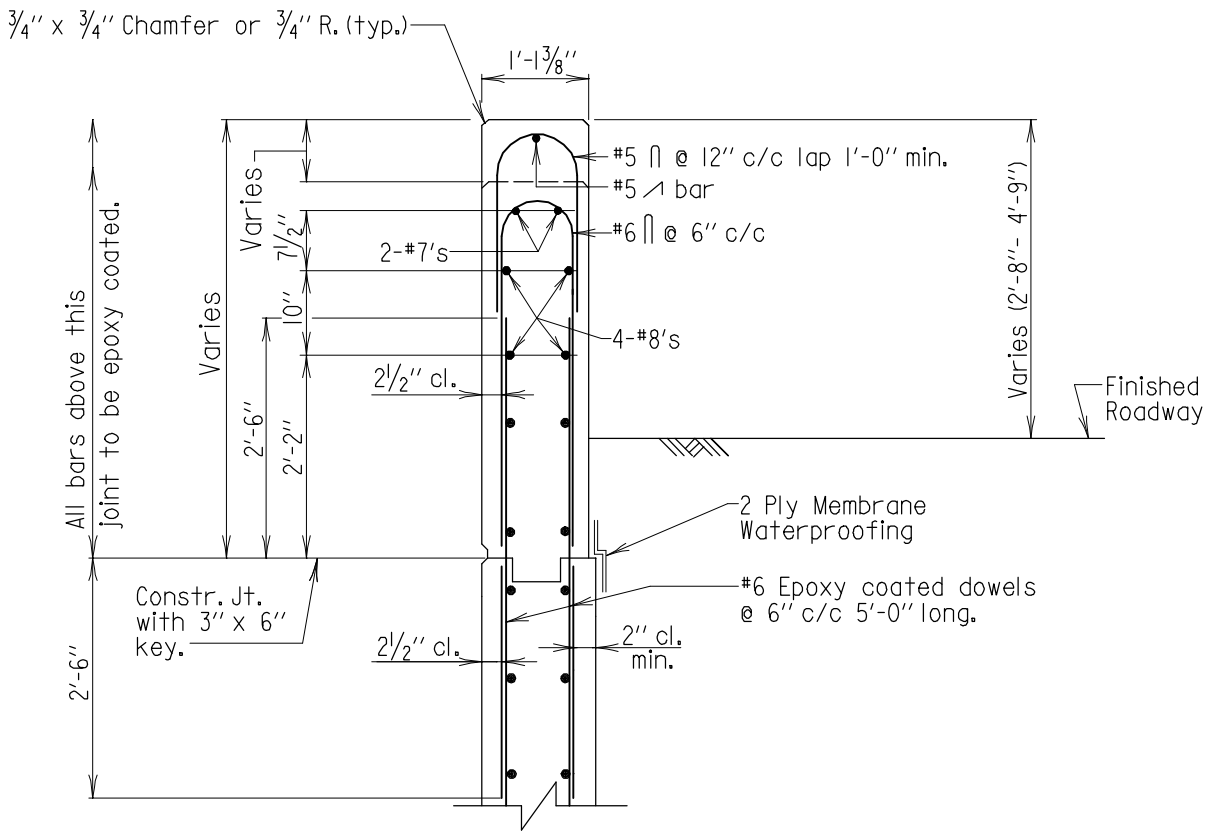

SECTION D-D

Scale: 1/2" = 1'-0"

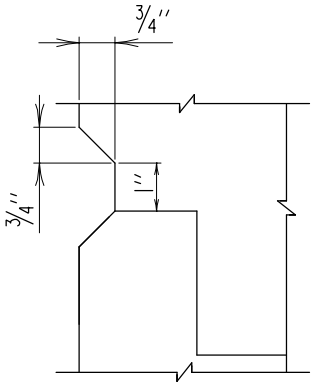

GROOVE DETAIL

Scale: 3" = 1'-0"

Note:
All longitudinal bars are #5 spaced as shown unless noted otherwise.

42" STRAIGHT BACK

APPROVAL	
R. S. Friedman DIRECTOR OFFICE OF STRUCTURES DATE: 6/1/05	
REVISIONS	
SHA	FHWA
11-14-05	
12-22-14	
FHWA APPROVAL	
DATE:	

STATE OF MARYLAND
DEPARTMENT OF TRANSPORTATION
STATE HIGHWAY ADMINISTRATION
OFFICE OF STRUCTURES

42" F-SHAPE END POST WITH FENCING OR RAILING
(END POST LENGTH < = 11'-2")

STANDARD NO. SUB-EP(42F)-103 SHEET 4 OF 4

SUBSTRUCTURE - END POST

OLD NO. BR-SB(6.57)-05-372

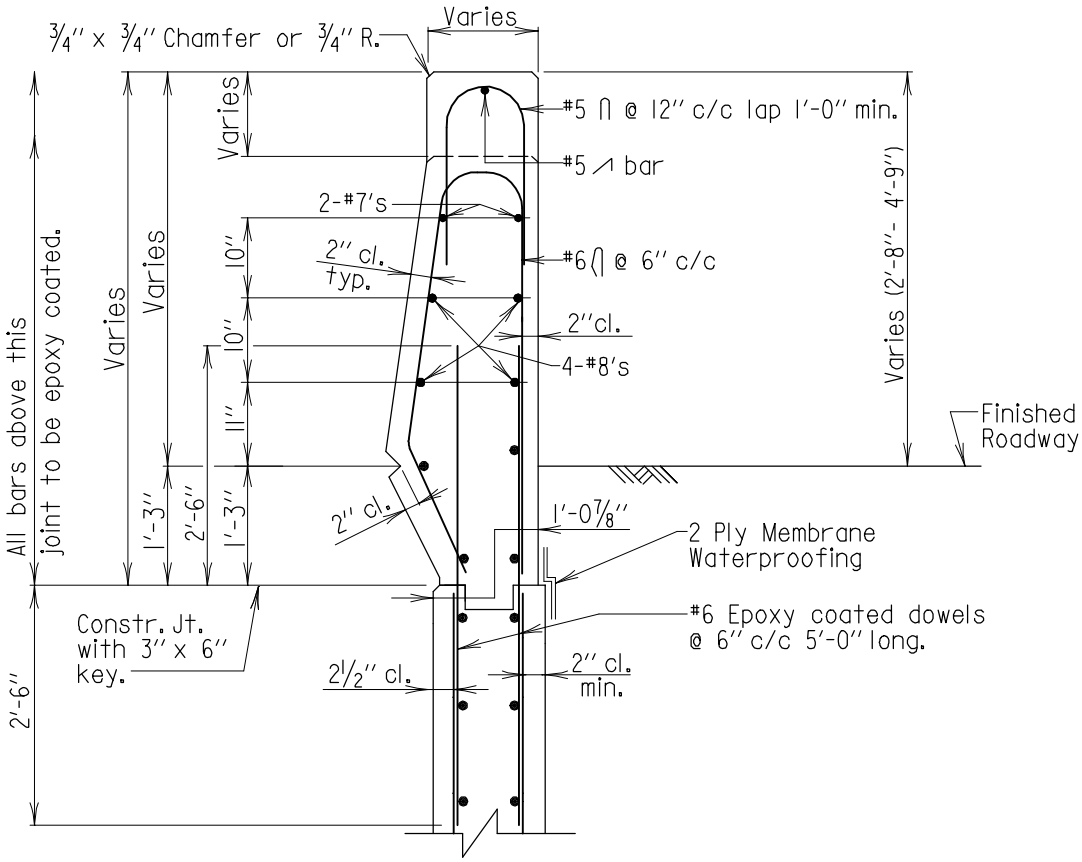

SECTION D-D

Scale: 1/2" = 1'-0"

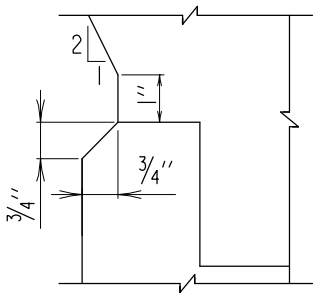

GROOVE DETAIL

Scale: 3" = 1'-0"

42" DIAMOND BACK

Note:
All longitudinal bars are #5 spaced as shown unless noted otherwise.

APPROVAL	
R.S. Freedman DIRECTOR OFFICE OF STRUCTURES	
DATE: 6/1/05	
REVISIONS	
SHA	FHWA
11-14-05	
12-22-14	
FHWA APPROVAL	
DATE:	

STATE OF MARYLAND
DEPARTMENT OF TRANSPORTATION
STATE HIGHWAY ADMINISTRATION
OFFICE OF STRUCTURES

42" F-SHAPE END POST WITH FENCING OR RAILING
(END POST LENGTH < = 11'-2")

STANDARD NO. SUB-EP(42F)-103 SHEET 4 OF 4

SUBSTRUCTURE - END POST

OLD NO. BR-SB(6.57)-05-372

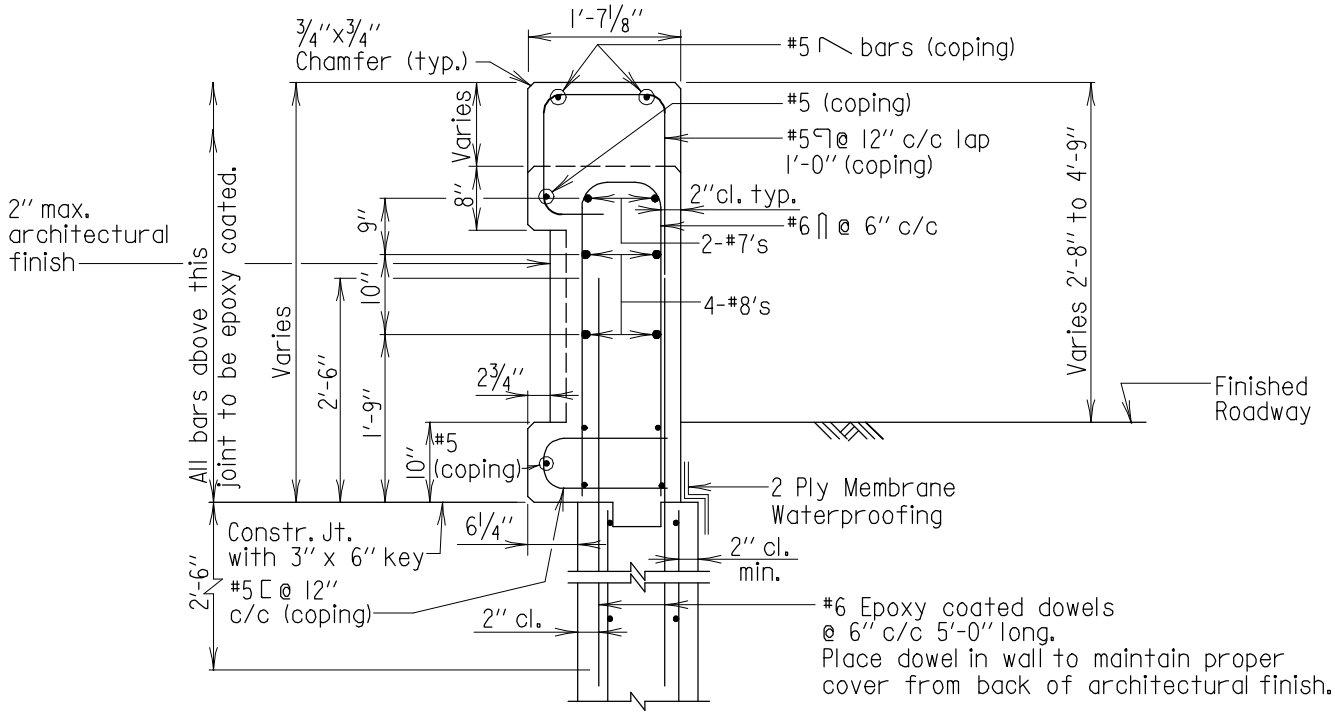

SECTION D-D

Scale: 1/2"=1'-0"

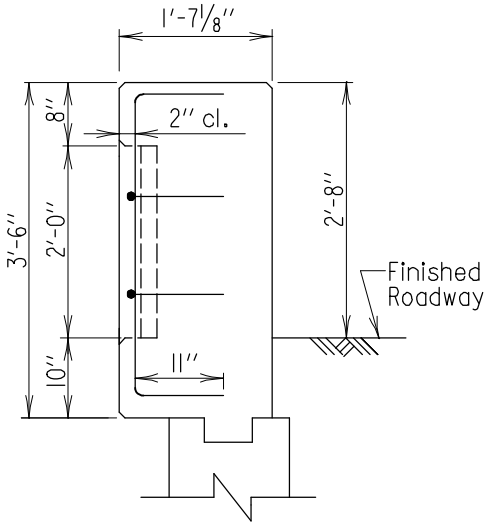

SECTION E-E

Scale: 1/2"=1'-0"

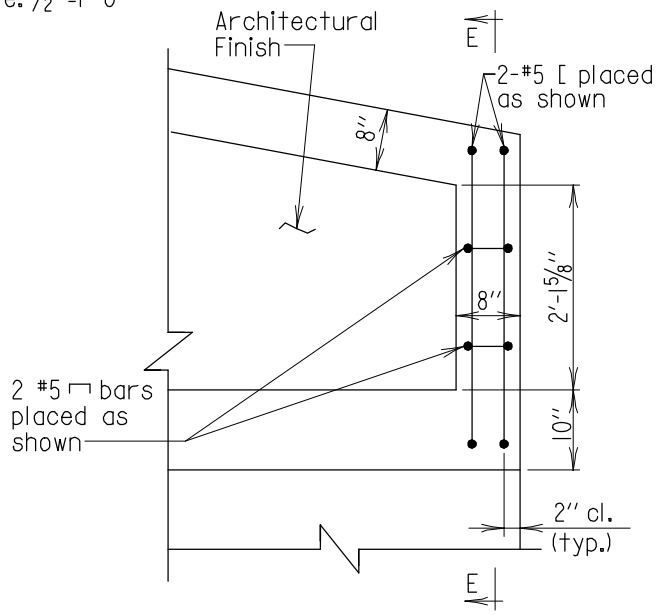

PARTIAL REAR ELEVATION

Scale: 1/2"=1'-0"

42" RECESSED BACK

Note:
All longitudinal bars are #5 spaced as shown unless noted otherwise.

APPROVAL	
R.S. Friedman DIRECTOR OFFICE OF STRUCTURES	
DATE: 6/1/05	
REVISIONS	
SHA	FHWA
11-14-05	
12-22-14	
FHWA APPROVAL	
DATE:	

STATE OF MARYLAND
DEPARTMENT OF TRANSPORTATION
STATE HIGHWAY ADMINISTRATION
OFFICE OF STRUCTURES

42" F-SHAPE END POST WITH FENCING OR RAILING
(END POST LENGTH < = 11'-2")

STANDARD NO. SUB-EP(42F)-103 SHEET 4 OF 4

SUBSTRUCTURE - END POST

OLD NO. BR-SB(6.57)-05-372

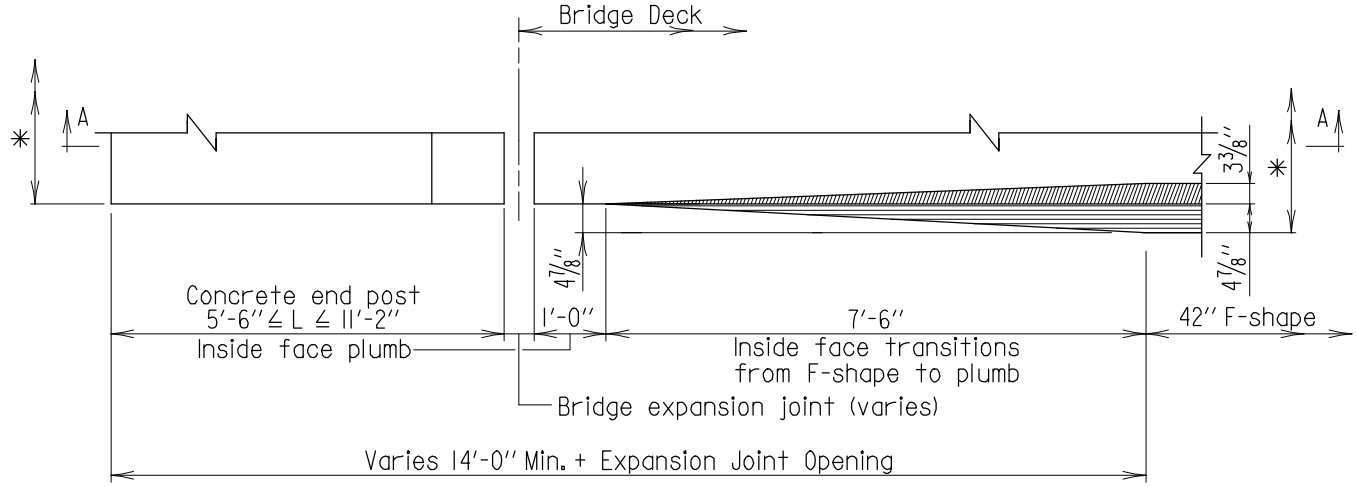

* For overall parapet dimension see sheets 3 and 4.

PLAN

Scale: 3/8'' = 1'-0''

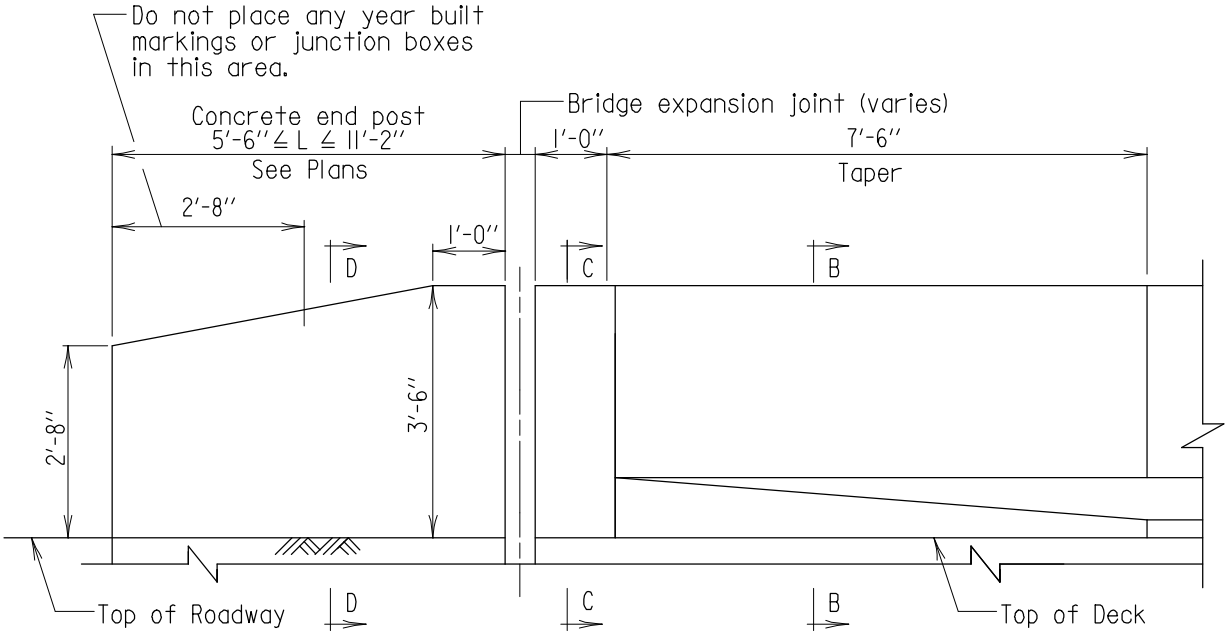

ELEVATION

Scale: 3/8'' = 1'-0''

Note to Designer:
This standard contains details for straight back, diamond back and recessed back parapets. Include the appropriate shape in the Contract Plans.

Notes:
1. Use on approach end of bridge when end post is less than 11'-2''.
2. Thrie Beam Traffic Barrier attachment not shown.
3. Taper barrier height to 2'-8'' when Thrie Beam is required. Continue at 3'-6'' and eliminate transition of F-Shape when adjacent to concrete F-Shape barrier.

APPROVAL	
E.S. Freedman DIRECTOR OFFICE OF STRUCTURES	
DATE: 6/1/05	
REVISIONS	
SHA	FHWA

FHWA APPROVAL	
DATE:	

STATE OF MARYLAND
DEPARTMENT OF TRANSPORTATION
STATE HIGHWAY ADMINISTRATION
OFFICE OF STRUCTURES

42'' F-SHAPE END POST WITHOUT FENCING OR RAILING
(APPROACH END, END POST LENGTH < = 11'-2'')

STANDARD NO. SUB-EP(42F)-104 SHEET 1 OF 4

SUBSTRUCTURE - END POST

OLD NO. BR-SB(6.58)-05-373

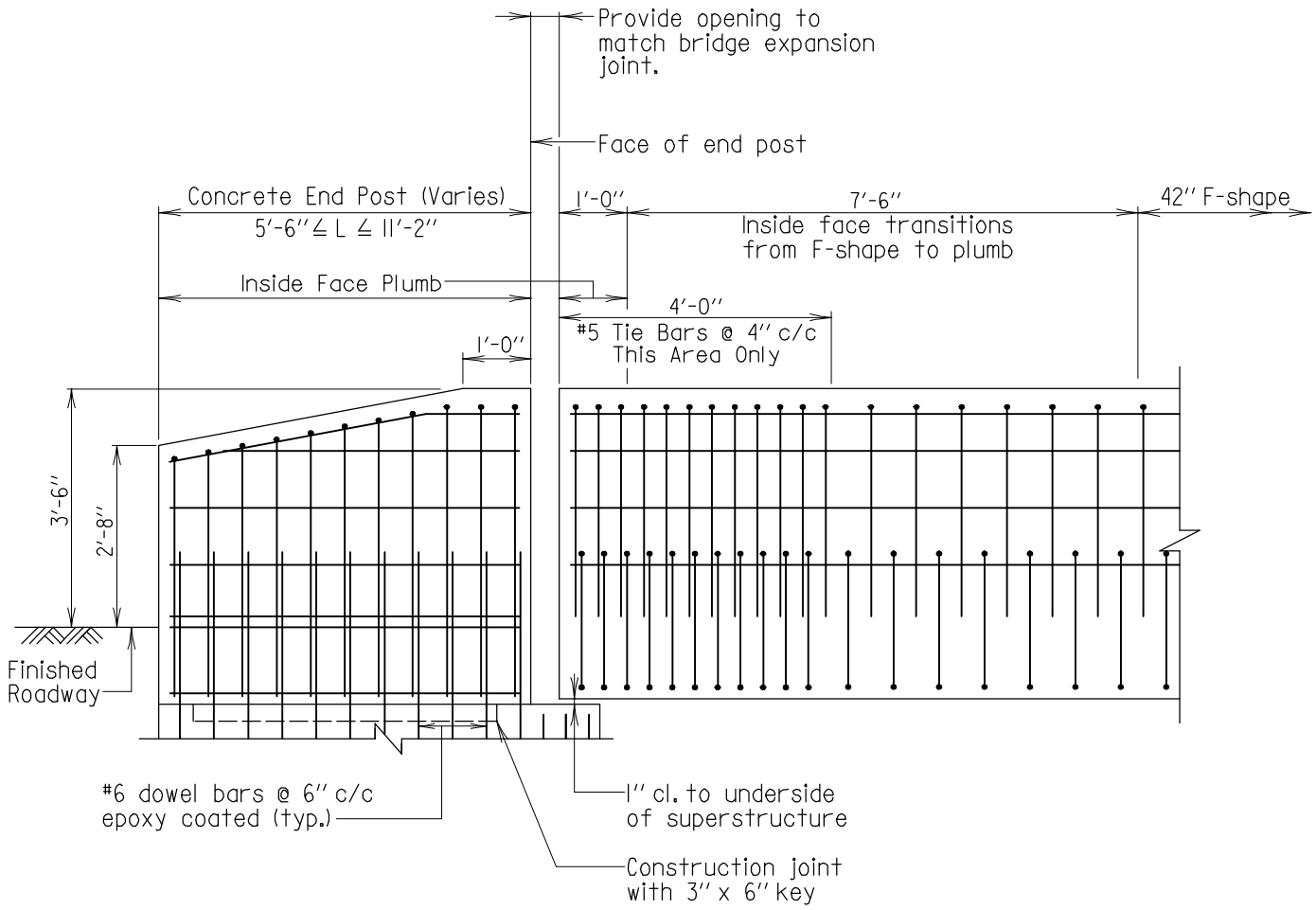

SECTION A-A

Scale: 3/8" = 1'-0"

Note to Designer:
This standard contains details for straight back, diamond back and recessed back parapets. Include the appropriate shape in the Contract Plans.

Notes:
1. For parapet reinforcing details see sheets 3 and 4.
2. If applicable, reinforcing for coping not shown.
3. Normal deck reinforcing not shown.

APPROVAL	
E.S. Freedman DIRECTOR OFFICE OF STRUCTURES	
DATE: 6/1/05	
REVISIONS	
SHA	FHWA
11-14-05	
FHWA APPROVAL	
DATE:	

STATE OF MARYLAND
DEPARTMENT OF TRANSPORTATION
STATE HIGHWAY ADMINISTRATION
OFFICE OF STRUCTURES

42" F-SHAPE END POST WITHOUT FENCING OR RAILING
(APPROACH END, END POST LENGTH < = 11'-2")

STANDARD NO. SUB-EP(42F)-104 SHEET 2 OF 4

SUBSTRUCTURE - END POST

OLD NO. BR-SB(6.58)-05-373

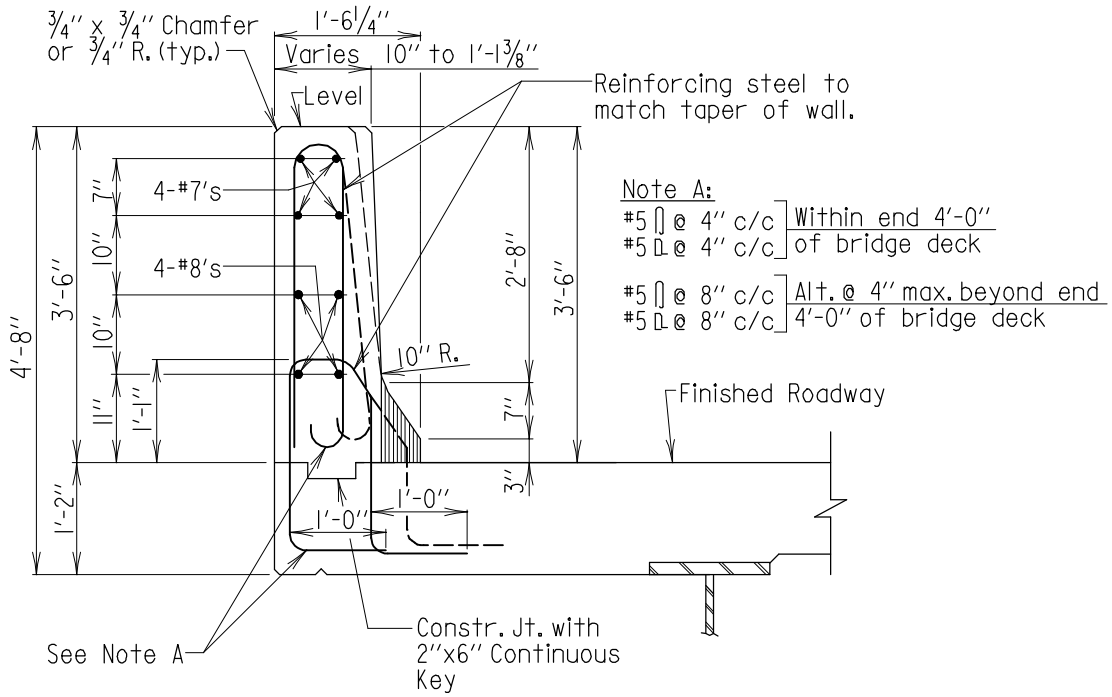

SECTION B-B

Scale: 1/2"=1'-0"

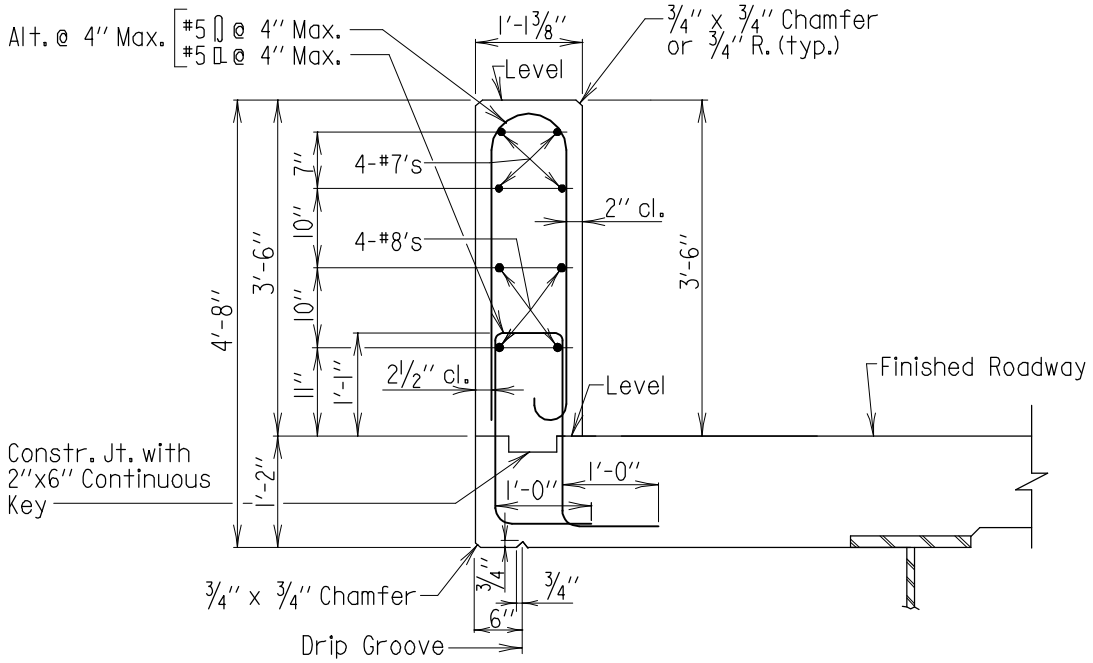

SECTION C-C

Scale: 1/2"=1'-0"

42" STRAIGHT BACK

Note:
Normal deck reinforcing not shown.

APPROVAL	
DIRECTOR OFFICE OF STRUCTURES	
DATE: 6/1/05	
REVISIONS	
SHA	FHWA

FHWA APPROVAL
DATE:

STATE OF MARYLAND
DEPARTMENT OF TRANSPORTATION
STATE HIGHWAY ADMINISTRATION
OFFICE OF STRUCTURES

42" F-SHAPE END POST WITHOUT FENCING OR RAILING
(APPROACH END, END POST LENGTH < = 11'-2")

STANDARD NO. SUB-EP(42F)-104 SHEET 3 OF 4

SUBSTRUCTURE - END POST

OLD NO. BR-SB(6.58)-05-373

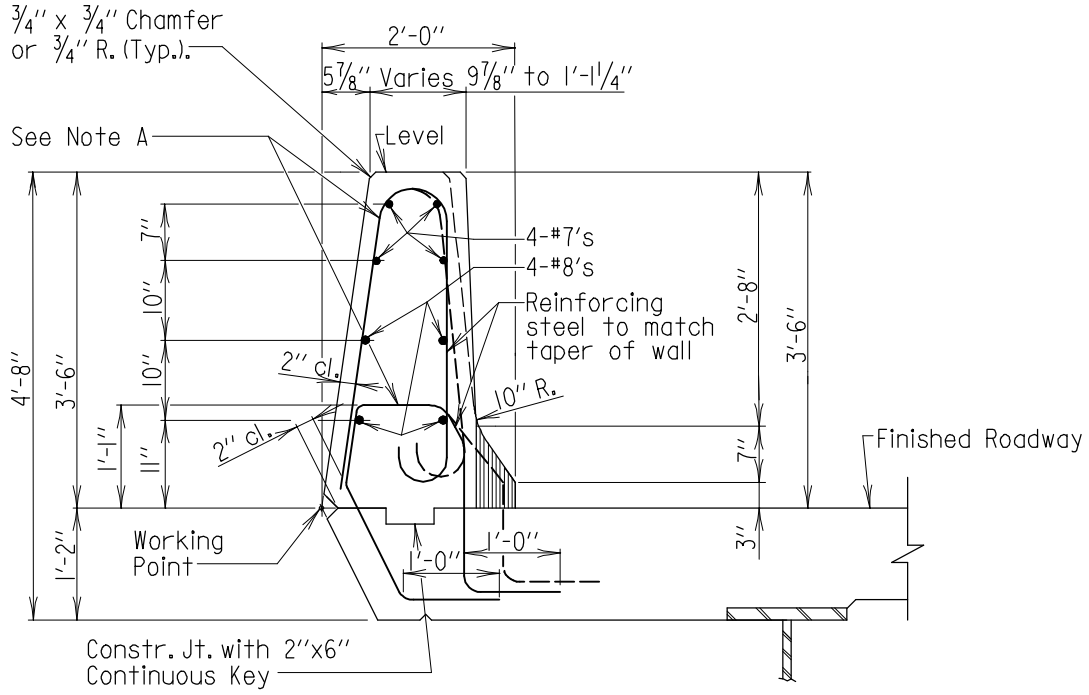

SECTION B-B

Scale: 1/2" = 1'-0"

Note A:

#5 ∩ @ 4" c/c
#5 ∩ @ 4" c/c
Within end 4'-0" of bridge deck

#5 ∩ @ 8" c/c
#5 ∩ @ 8" c/c
Alt. @ 4" max. beyond end 4'-0" of bridge deck

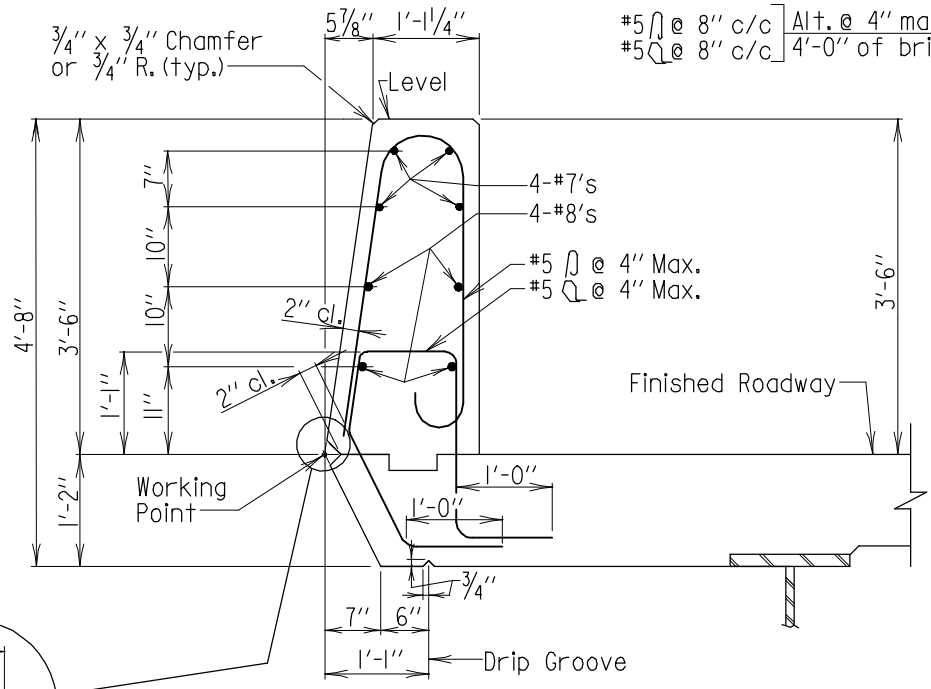

SECTION C-C

Scale: 1/2" = 1'-0"

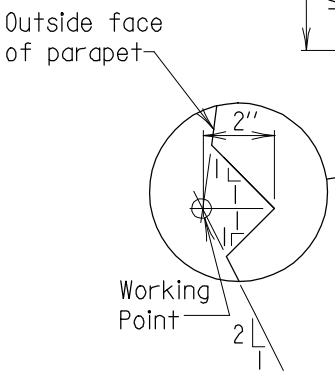

42" DIAMOND BACK

Note:
Normal deck reinforcing not shown.

APPROVAL	
E.S. Freedman DIRECTOR OFFICE OF STRUCTURES	
DATE: 6/1/05	
REVISIONS	
SHA	FHWA

FHWA APPROVAL
DATE:

STATE OF MARYLAND
DEPARTMENT OF TRANSPORTATION
STATE HIGHWAY ADMINISTRATION
OFFICE OF STRUCTURES

42" F-SHAPE END POST WITHOUT FENCING OR RAILING
(APPROACH END, END POST LENGTH < = 11'-2")

STANDARD NO. SUB-EP(42F)-104 SHEET 3 OF 4

SUBSTRUCTURE - END POST

OLD NO. BR-SB(6.58)-05-373

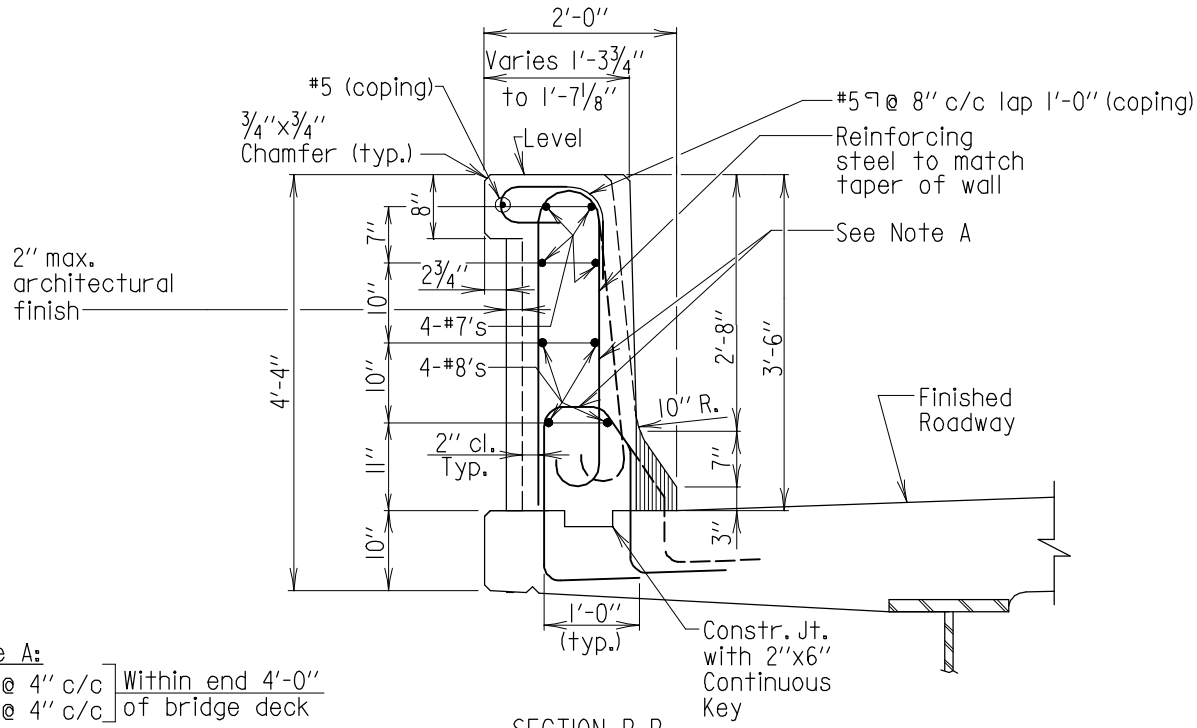

Note A:

#5 @ 4" c/c
#5 @ 4" c/c
Within end 4'-0" of bridge deck

#5 @ 8" c/c
#5 @ 8" c/c
Alt. @ 4" max. beyond end 4'-0" of bridge deck

SECTION B-B

Scale: ½"=1'-0"

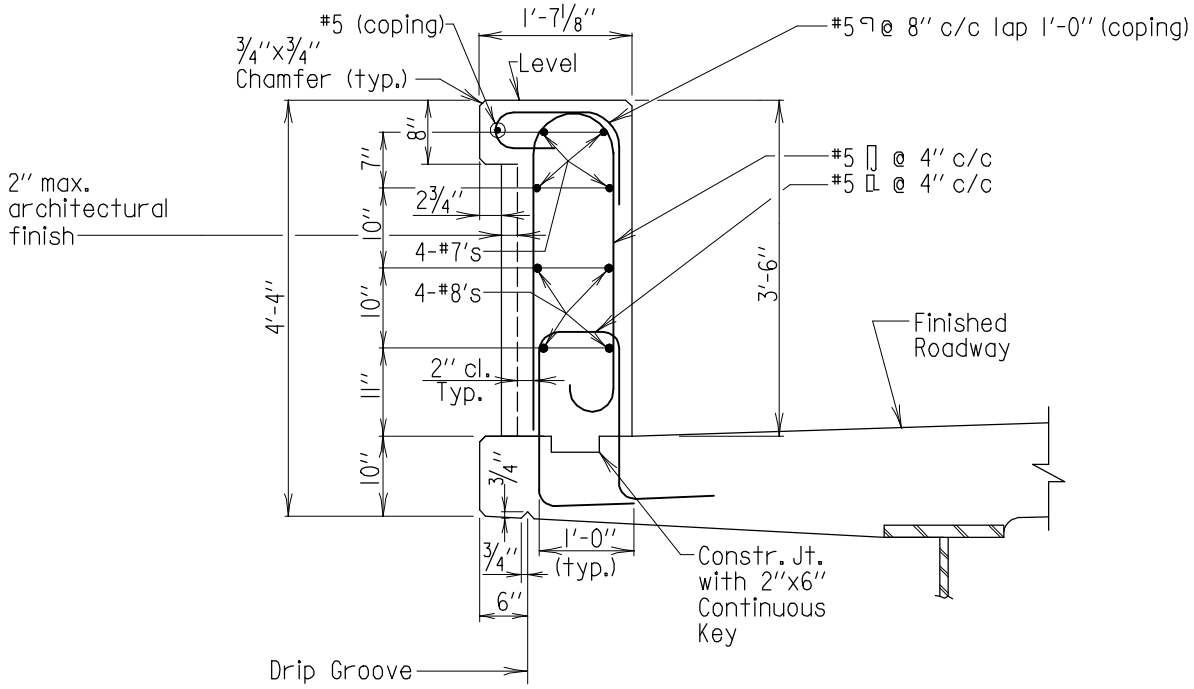

SECTION C-C

Scale: ½"=1'-0"

42" RECESSED BACK

Note:
Normal deck reinforcing not shown.

APPROVAL	
DIRECTOR OFFICE OF STRUCTURES	
DATE: 6/1/05	
REVISIONS	
SHA	FHWA

FHWA APPROVAL
DATE:

STATE OF MARYLAND
DEPARTMENT OF TRANSPORTATION
STATE HIGHWAY ADMINISTRATION
OFFICE OF STRUCTURES

42" F-SHAPE END POST WITHOUT FENCING OR RAILING
(APPROACH END, END POST LENGTH < = 11'-2")

STANDARD NO. SUB-EP(42F)-104 SHEET 3 OF 4

SUBSTRUCTURE - END POST

OLD NO. BR-SB(6.58)-05-373

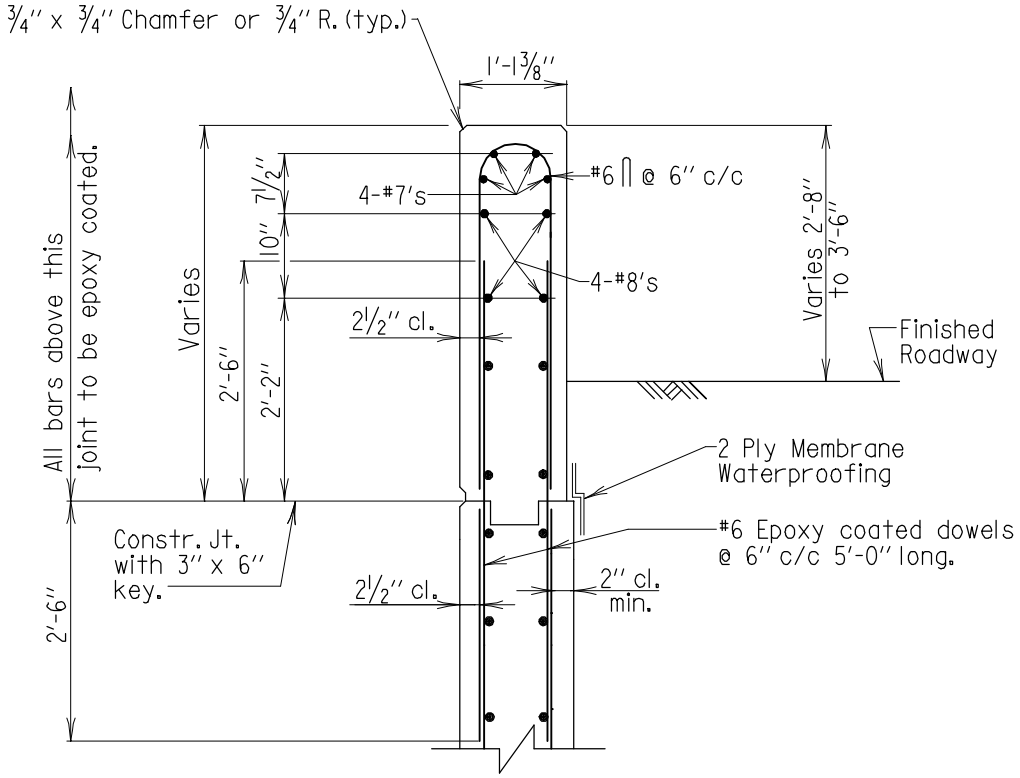

SECTION D-D

Scale: 1/2" = 1'-0"

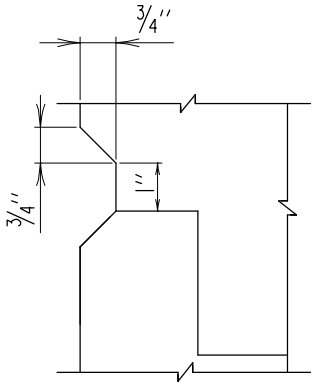

GROOVE DETAIL

Scale: 3" = 1'-0"

42" STRAIGHT BACK

Note:
All longitudinal bars are #5 spaced as shown unless noted otherwise.

APPROVAL	
R. S. Freedman DIRECTOR OFFICE OF STRUCTURES DATE: 6/1/05	
REVISIONS	
SHA	FHWA
11-14-05	
12-22-14	
FHWA APPROVAL	
DATE:	

STATE OF MARYLAND
DEPARTMENT OF TRANSPORTATION
STATE HIGHWAY ADMINISTRATION
OFFICE OF STRUCTURES

42" F-SHAPE END POST WITHOUT FENCING OR RAILING
(APPROACH END, END POST LENGTH < = 11'-2")

STANDARD NO. SUB-EP(42F)-104 SHEET 4 OF 4

SUBSTRUCTURE - END POST

OLD NO. BR-SB(6.58)-05-373

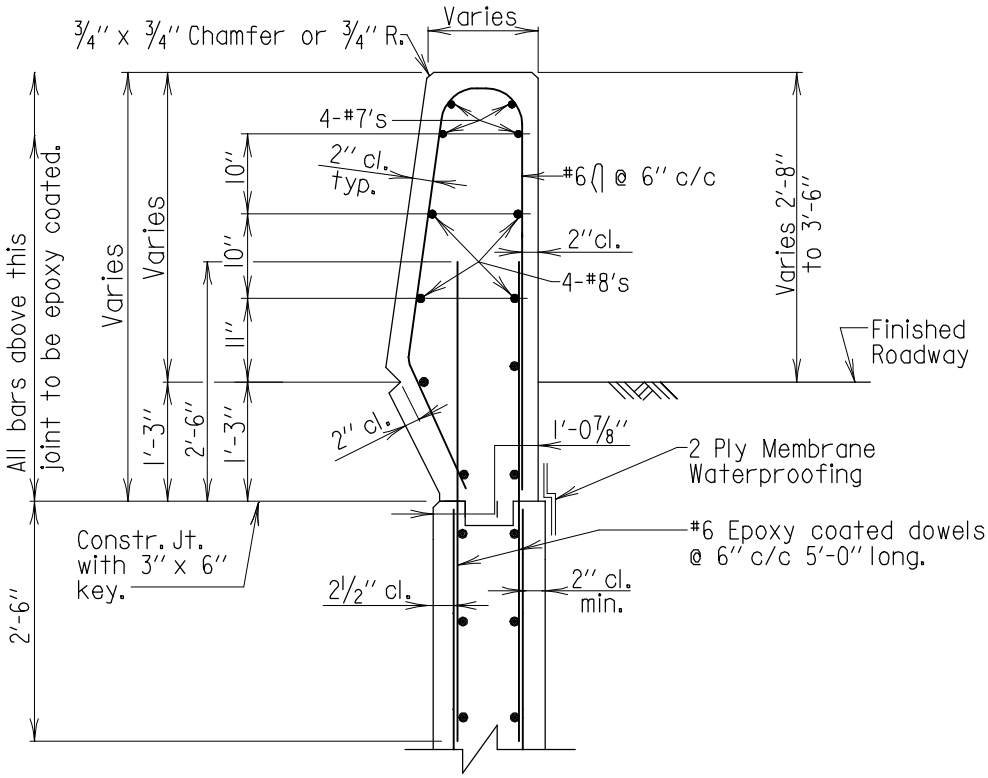

SECTION D-D

Scale: 1/2" = 1'-0"

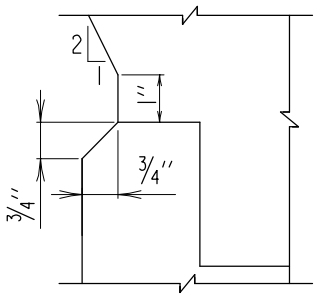

GROOVE DETAIL

Scale: 3" = 1'-0"

42" DIAMOND BACK

Note:
All longitudinal bars are #5 spaced as shown unless noted otherwise.

APPROVAL	
DIRECTOR OFFICE OF STRUCTURES	
DATE: 6/1/05	
REVISIONS	
SHA	FHWA
11-14-05	
12-22-14	
FHWA APPROVAL	
DATE:	

STATE OF MARYLAND
DEPARTMENT OF TRANSPORTATION
STATE HIGHWAY ADMINISTRATION
OFFICE OF STRUCTURES

42" F-SHAPE END POST WITHOUT FENCING OR RAILING
(APPROACH END, END POST LENGTH < = 11'-2")

STANDARD NO. SUB-EP(42F)-104 SHEET 4 OF 4

SUBSTRUCTURE - END POST

OLD NO. BR-SB(6.58)-05-373

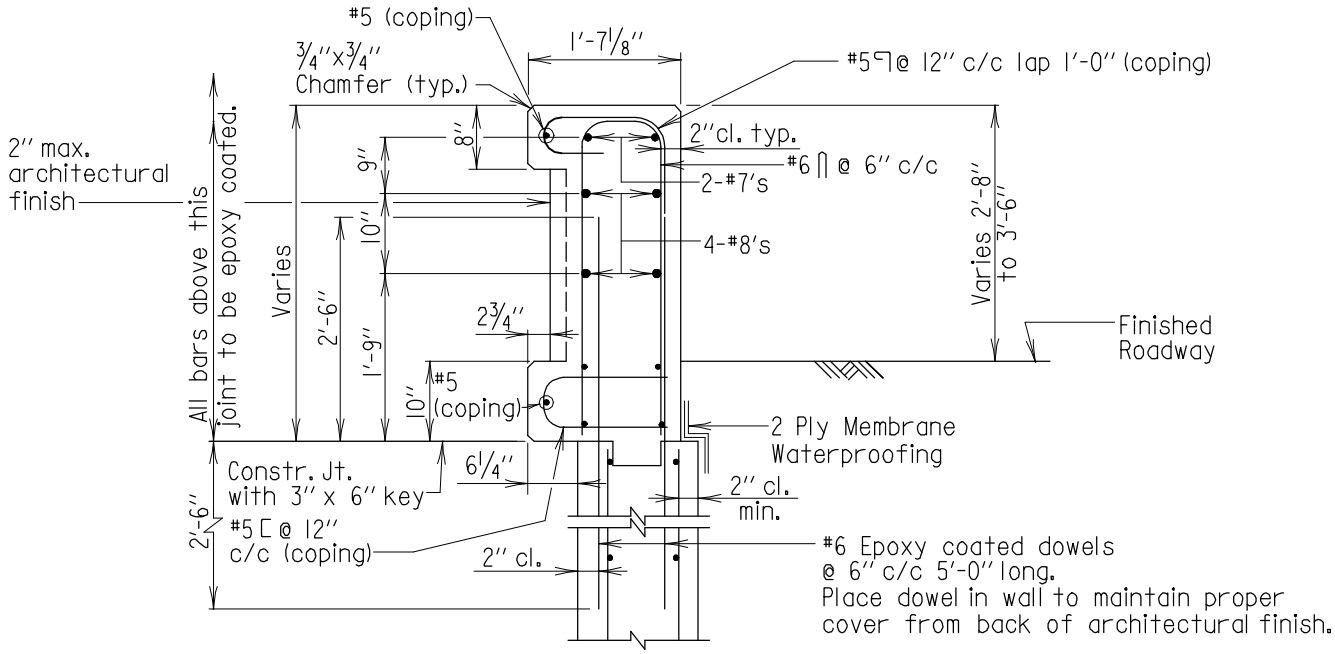

SECTION D-D

Scale: 1/2"=1'-0"

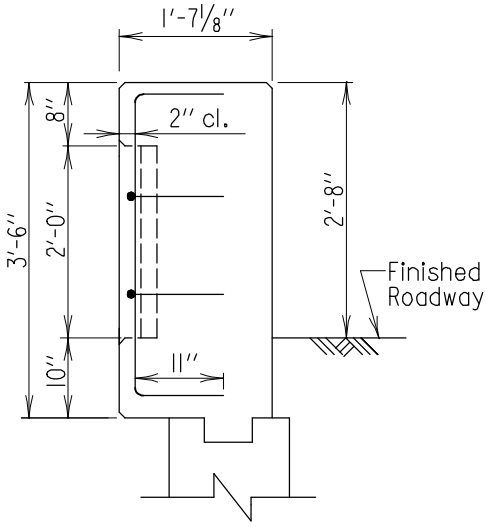

SECTION E-E

Scale: 1/2"=1'-0"

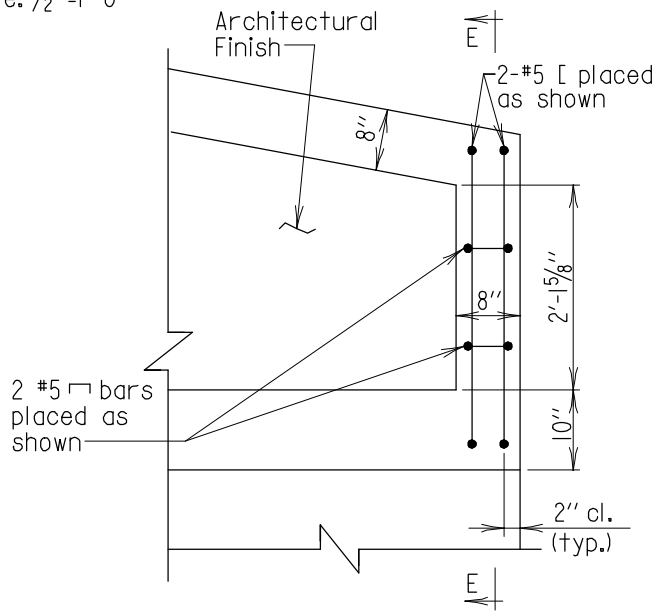

PARTIAL REAR ELEVATION

Scale: 1/2"=1'-0"

42" RECESSED BACK

Note:
All longitudinal bars are #5 spaced as shown unless noted otherwise.

APPROVAL	
R.S. Freedman DIRECTOR OFFICE OF STRUCTURES DATE: 6/1/05	
REVISIONS	
SHA	FHWA
11-14-05	
12-22-14	
FHWA APPROVAL	
DATE:	

STATE OF MARYLAND
DEPARTMENT OF TRANSPORTATION
STATE HIGHWAY ADMINISTRATION
OFFICE OF STRUCTURES

42" F-SHAPE END POST WITHOUT FENCING OR RAILING
(APPROACH END, END POST LENGTH < = 11'-2")

STANDARD NO. SUB-EP(42F)-104 SHEET 4 OF 4

SUBSTRUCTURE - END POST

OLD NO. BR-SB(6.58)-05-373

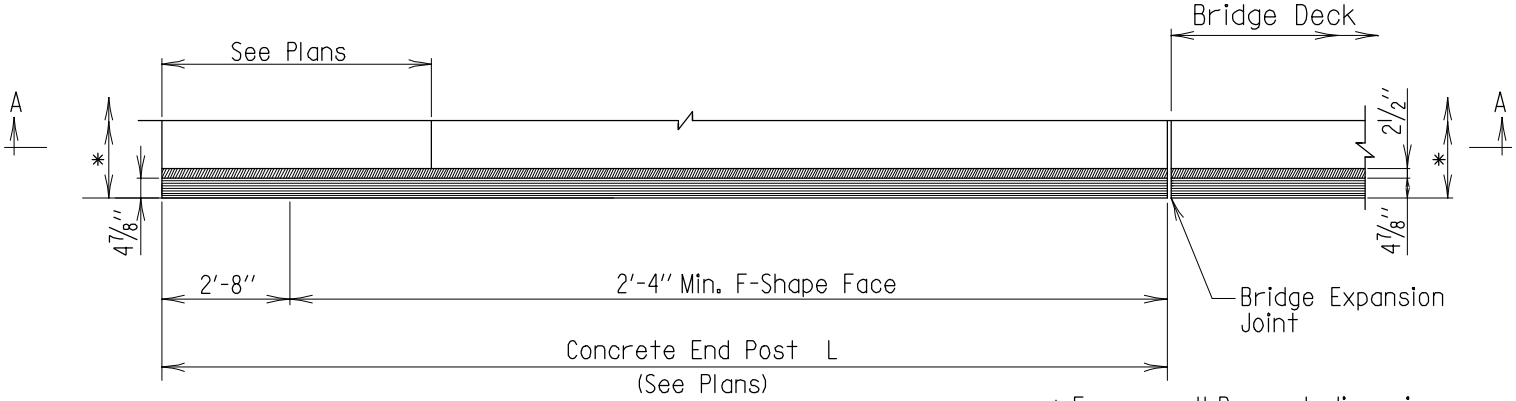

* For overall Parapet dimensions, see sheets 3 and 4 of 4.

PLAN

Scale: 1/4''=1'-0''

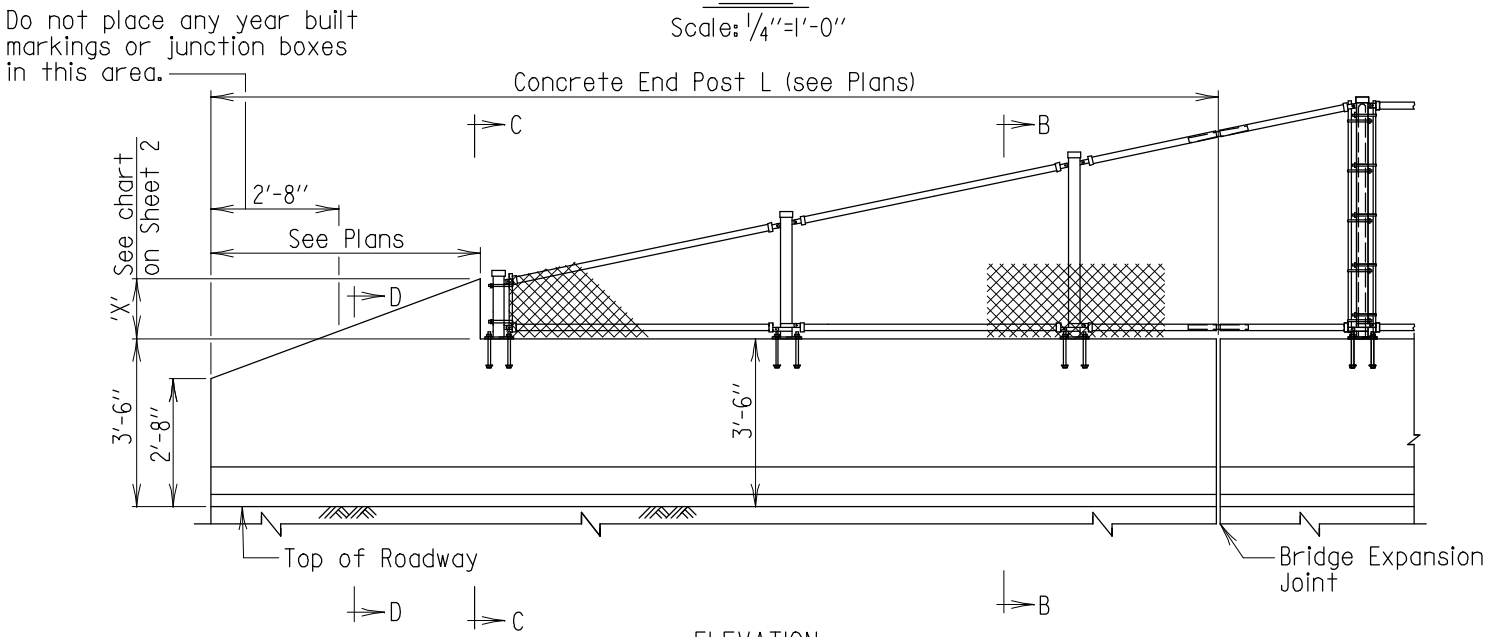

ELEVATION

Scale: 1/4''=1'-0''

Notes:

1. Use on the trail end of one way bridges.
2. W-Beam Traffic Barrier not shown.
3. Type II fence shown, see Plans for fence or railing layout and details.
4. Taper barrier height to 2'-8'' when Thrie Beam is required.
   Taper barrier height to 3'-6'' when adjacent to concrete F-Shape Barrier.

Note to Designer:
This standard contains details for straight back, diamond back and recessed back parapets. Include the appropriate shape in the Contract Plans.

FHWA APPROVAL
DATE:

APPROVAL
DIRECTOR
OFFICE OF STRUCTURES
DATE: 6/1/05

REVISIONS
SHA
FHWA

STATE OF MARYLAND
DEPARTMENT OF TRANSPORTATION
STATE HIGHWAY ADMINISTRATION
OFFICE OF STRUCTURES

42'' F-SHAPE PARAPET END POST WITH FENCING OR RAILING TRAIL END

STANDARD NO. SUB-EP(42F)-105

SHEET 1 OF 4

OLD NO. BR-SB(6.55)-05-370

SUBSTRUCTURE - END POST

'X'	Fence or Railing Type
1'-0''	One Strand Railing
1'-3''	Type II Fence
1'-9''	Two Strand Railing

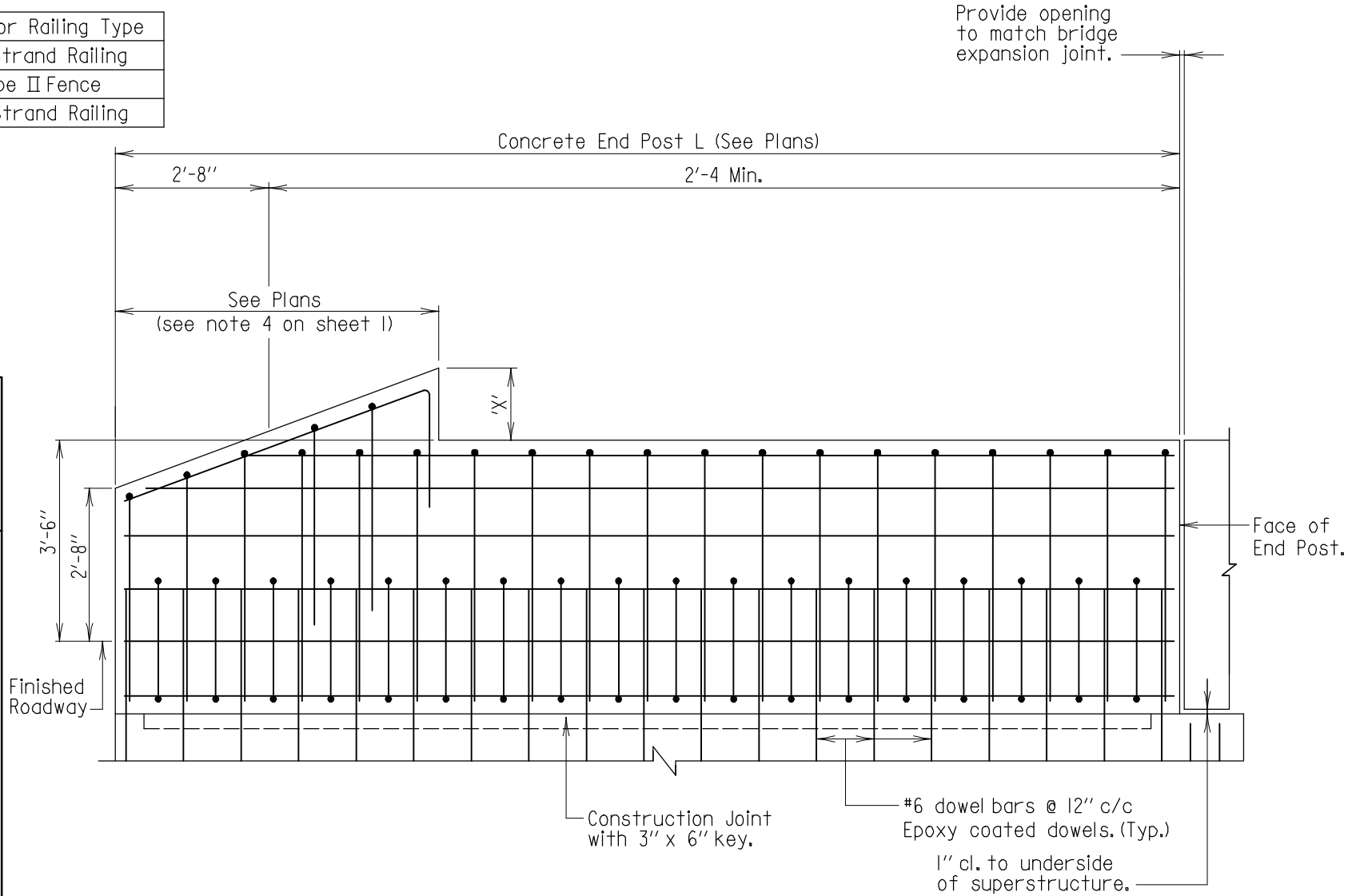

SECTION A-A

Scale: 3/8''=1'-0''

Notes:
1. For Parapet Reinforcing Details, see sheets 3 and 4.
2. Fencing or railing not shown.
3. If applicable, reinforcing for coping not shown.

Note to Designer:
This standard contains details for straight back, diamond back and recessed back parapets. Include the appropriate shape in the Contract Plans.

APPROVAL
OFFICE OF STRUCTURES DIRECTOR
DATE: 6/1/05

REVISIONS
SHA 11-14-05
FHWA

FHWA APPROVAL
DATE:

STATE OF MARYLAND
DEPARTMENT OF TRANSPORTATION
STATE HIGHWAY ADMINISTRATION
OFFICE OF STRUCTURES

42'' F-SHAPE PARAPET END POST WITH FENCING OR RAILING TRAIL END

STANDARD NO. SUB-EP(42F)-105

SHEET 2 OF 4

OLD NO. BR-SB(6.55)-05-370

SUBSTRUCTURE - END POST

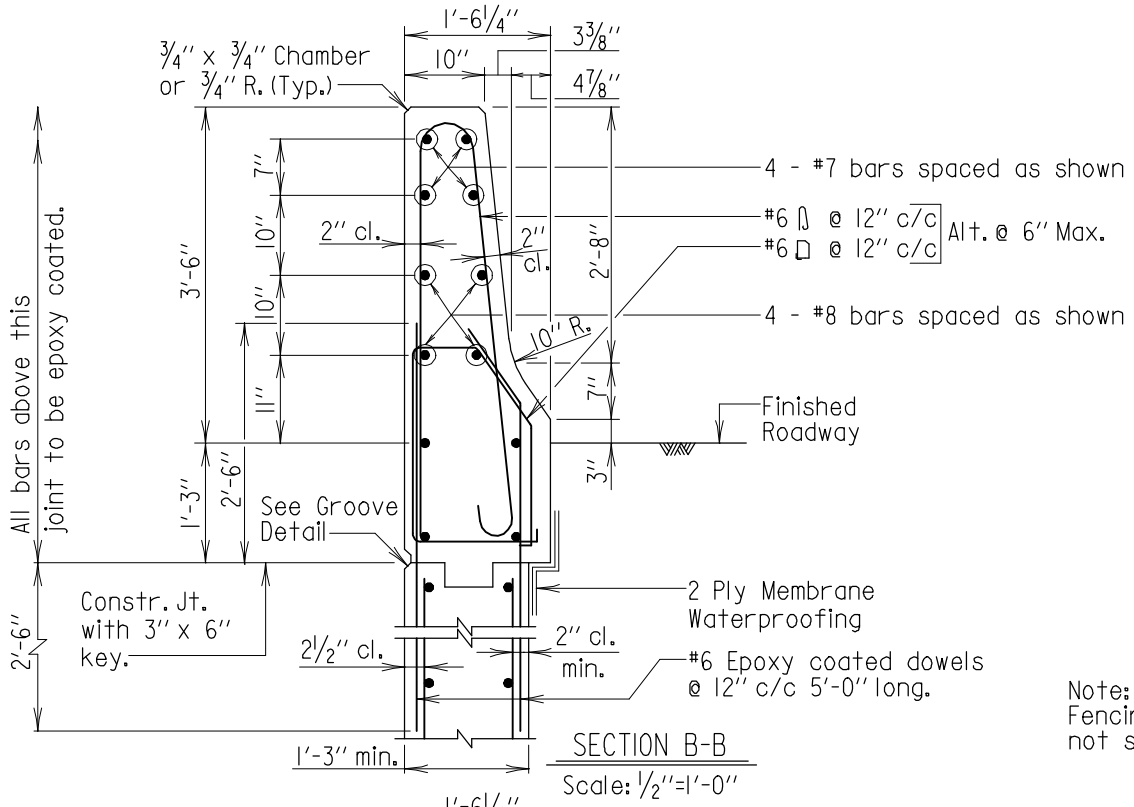

SECTION B-B

Scale: 1/2"=1'-0"

Note:
Fencing and Railing not shown.

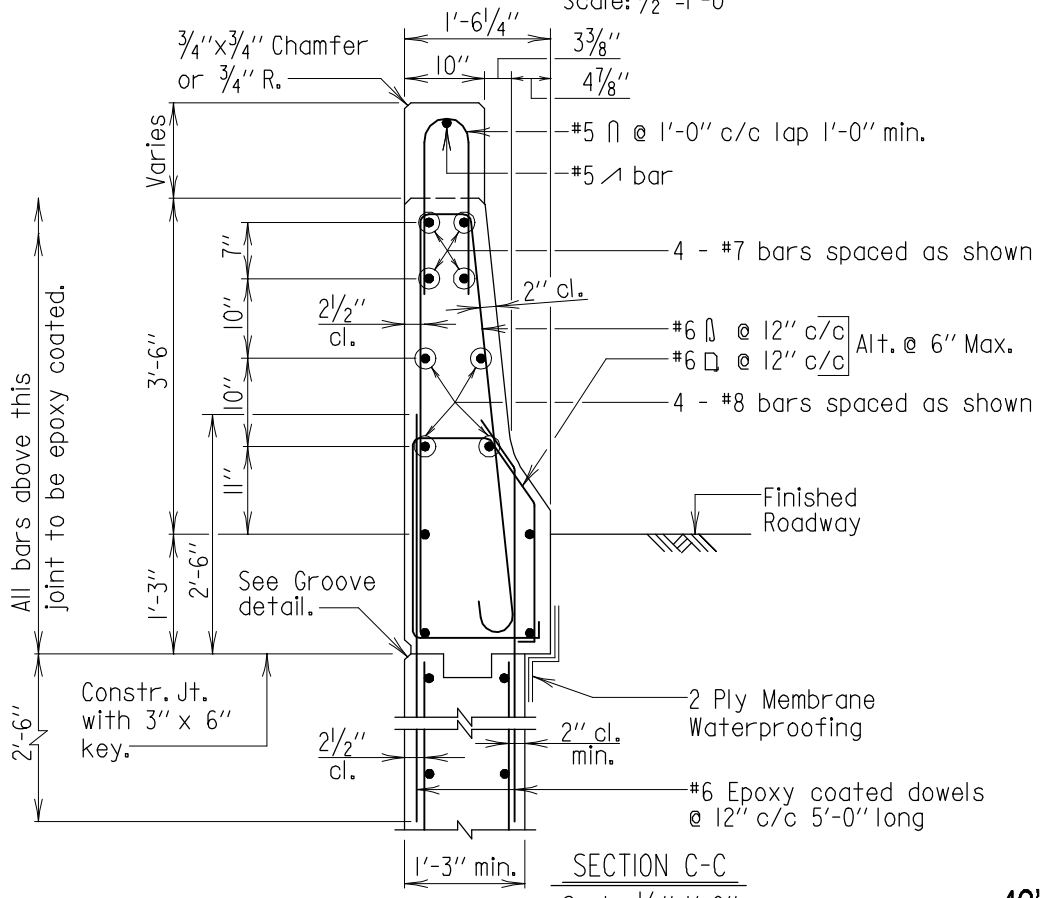

SECTION C-C

Scale: 1/2"=1'-0"

42" STRAIGHT BACK

Note:
All longitudinal bars are #5 spaced as shown, unless noted otherwise.

APPROVAL	
E.S. Freedman DIRECTOR OFFICE OF STRUCTURES DATE: 6/1/05	
REVISIONS	
SHA	FHWA
11-14-05	
12-22-14	
FHWA APPROVAL	
DATE:	

STATE OF MARYLAND
DEPARTMENT OF TRANSPORTATION
STATE HIGHWAY ADMINISTRATION
OFFICE OF STRUCTURES

42" F-SHAPE PARAPET END POST WITH FENCING OR RAILING TRAIL END

STANDARD NO. SUB-EP(42F)-105

SHEET 3 OF 4

SUBSTRUCTURE - END POST

OLD NO. BR-SB(6.55)-05-370

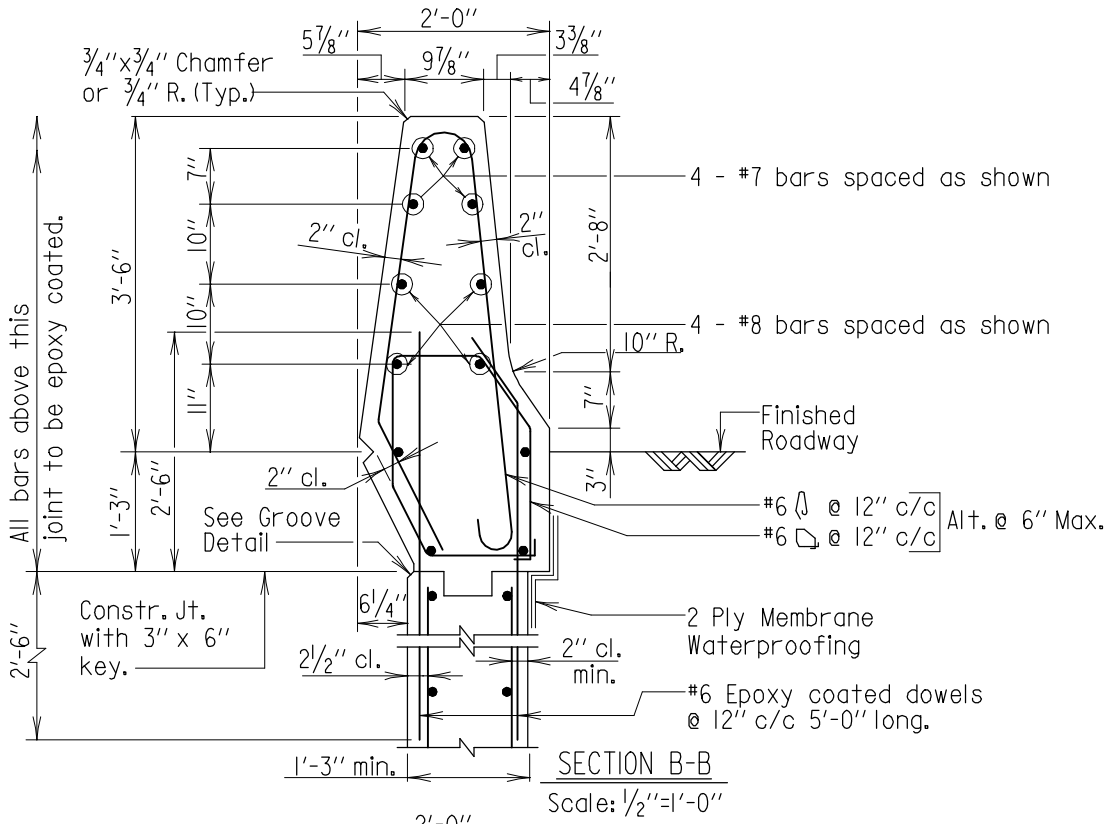

SECTION B-B

Scale: 1/2"=1'-0"

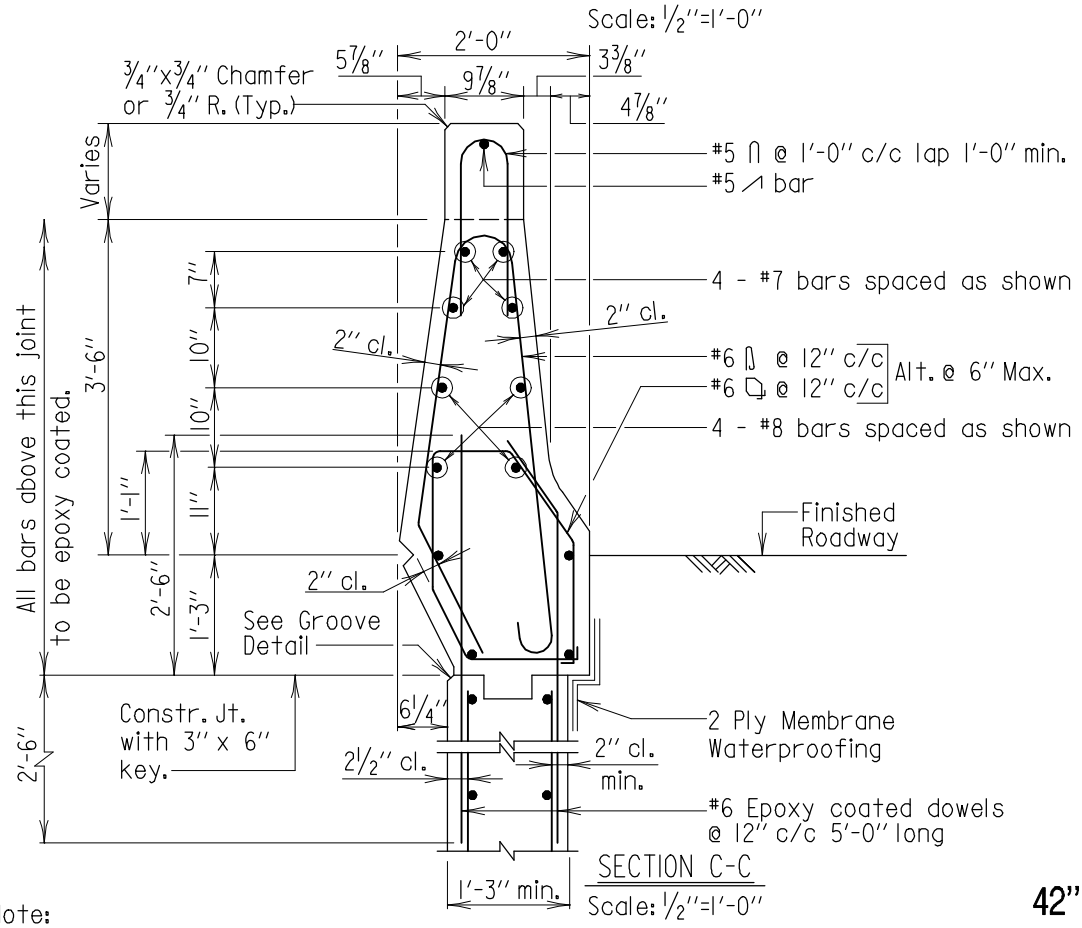

SECTION C-C

Scale: 1/2"=1'-0"

42" DIAMOND BACK

Note:
All longitudinal bars are #5 spaced as shown, unless noted otherwise.

APPROVAL	
E.S. Freedman DIRECTOR OFFICE OF STRUCTURES DATE: 6/1/05	
REVISIONS	
SHA	FHWA
11-14-05	
12-22-14	
FHWA APPROVAL	
DATE:	

STATE OF MARYLAND
DEPARTMENT OF TRANSPORTATION
STATE HIGHWAY ADMINISTRATION
OFFICE OF STRUCTURES

42" F-SHAPE PARAPET END POST WITH FENCING OR RAILING TRAIL END

STANDARD NO. SUB-EP(42F)-105 SHEET 3 OF 4

SUBSTRUCTURE - END POST

OLD NO. BR-SB(6.55)-05-370

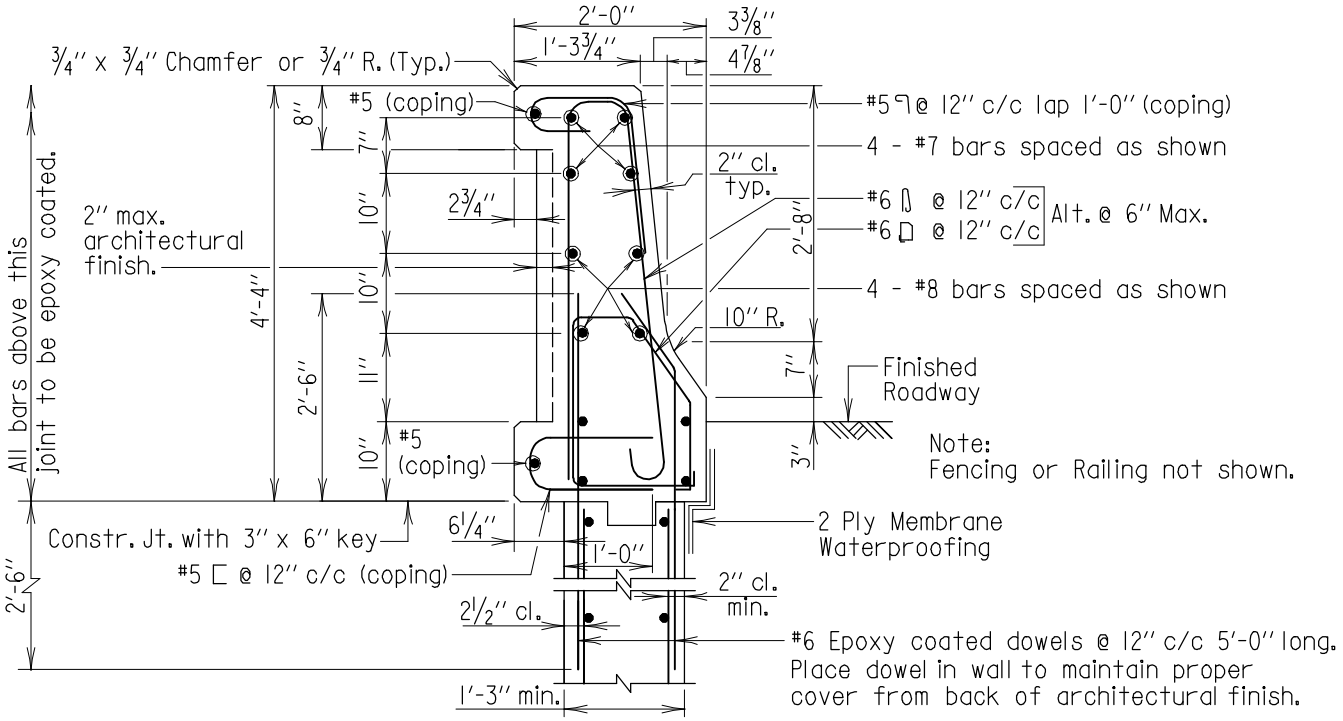

SECTION B-B

Scale: 1/2"=1'-0"

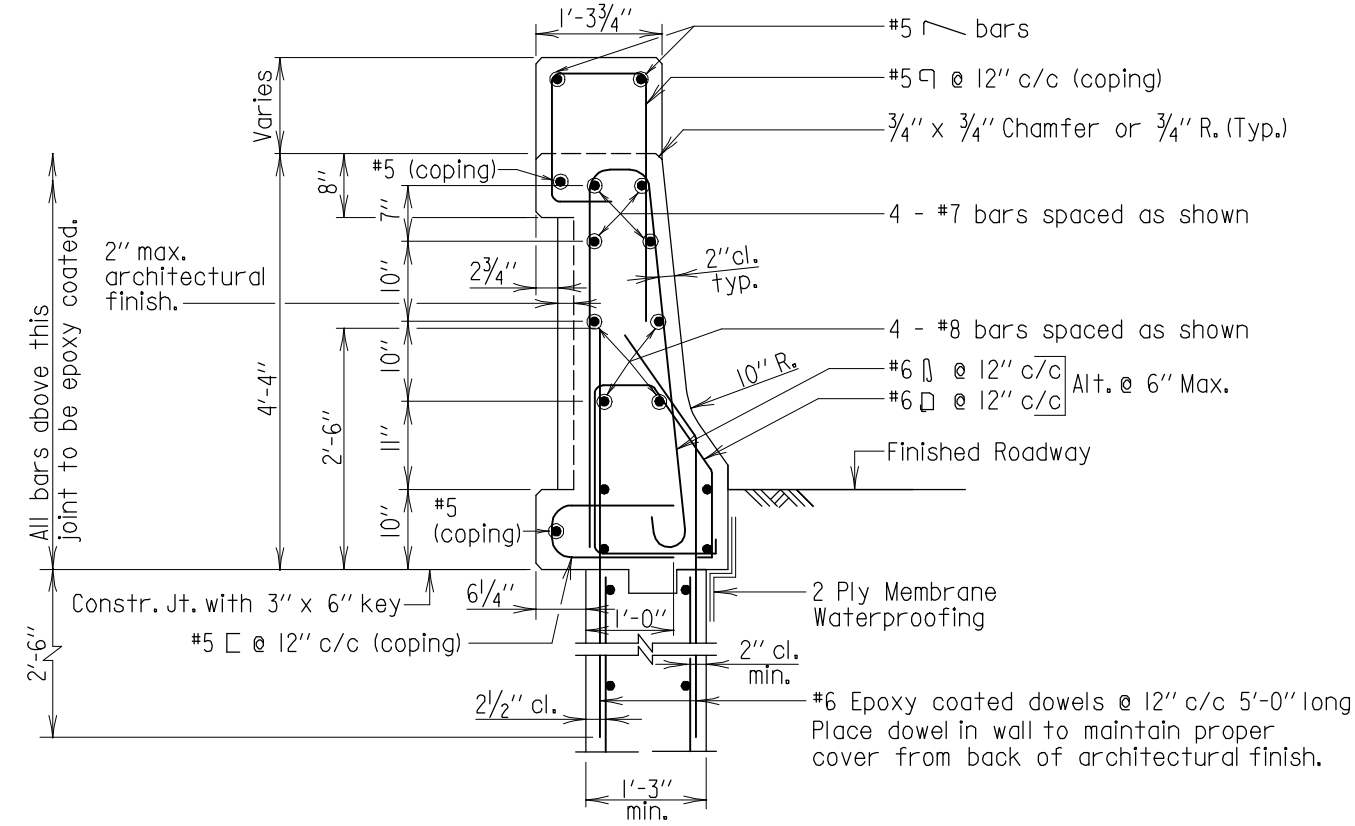

SECTION C-C

Scale: 1/2"=1'-0"

42" RECESSED BACK

Note:
All longitudinal bars are #5 spaced as shown, unless noted otherwise.

APPROVAL	
E.S. Freedman DIRECTOR OFFICE OF STRUCTURES	
DATE: 6/1/05	
REVISIONS	
SHA	FHWA
11-14-05	
12-22-14	
FHWA APPROVAL	
DATE:	

STATE OF MARYLAND
DEPARTMENT OF TRANSPORTATION
STATE HIGHWAY ADMINISTRATION
OFFICE OF STRUCTURES

42" F-SHAPE PARAPET END POST WITH FENCING OR RAILING TRAIL END

STANDARD NO. SUB-EP(42F)-105 SHEET 3 OF 4

SUBSTRUCTURE - END POST

OLD NO. BR-SB(6.55)-05-370

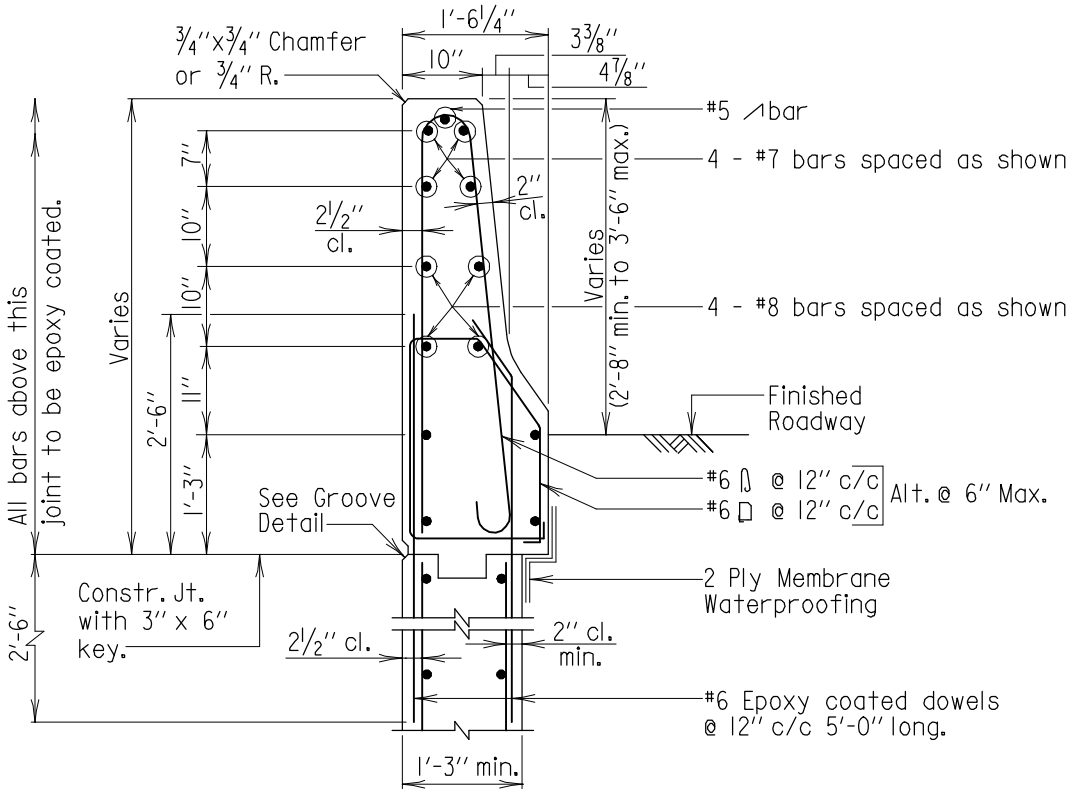

SECTION D-D

Scale: 1/2"=1'-0"

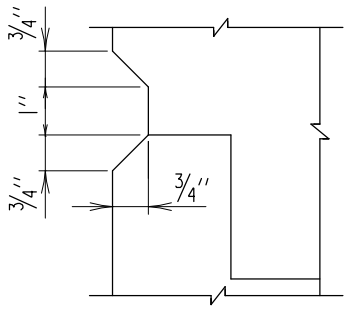

GROOVE DETAIL

Scale: 3"=1'-0"

Note:
All longitudinal bars are #5 spaced as shown, unless noted otherwise.

42" STRAIGHT BACK

APPROVAL	
E.S. Freedman DIRECTOR OFFICE OF STRUCTURES DATE: 6/1/05	
REVISIONS	
SHA	FHWA
11-14-05	
12-22-14	
FHWA APPROVAL	
DATE:	

STATE OF MARYLAND
DEPARTMENT OF TRANSPORTATION
STATE HIGHWAY ADMINISTRATION
OFFICE OF STRUCTURES

42" F-SHAPE PARAPET END POST WITH FENCING OR RAILING TRAIL END

STANDARD NO. SUB-EP(42F)-105 SHEET 4 OF 4

SUBSTRUCTURE - END POST

OLD NO. BR-SB(6.55)-05-370

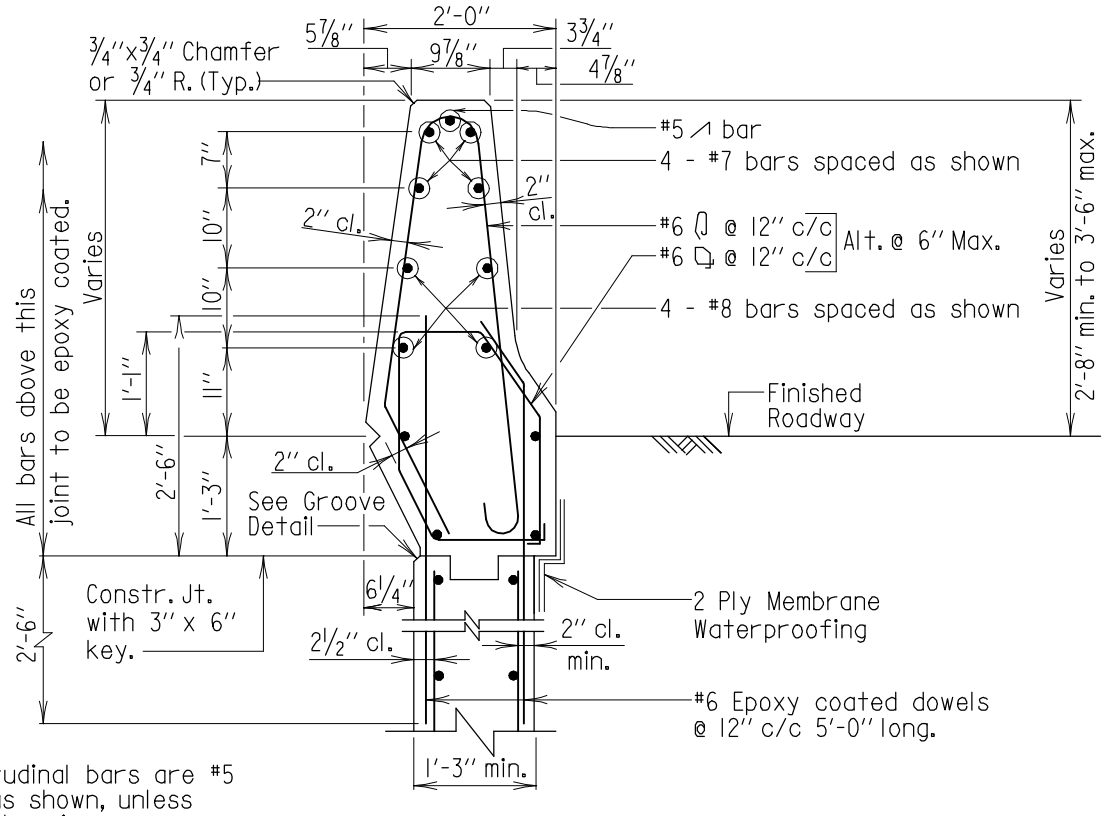

Note:
All longitudinal bars are #5 spaced as shown, unless noted otherwise.

SECTION D-D
Scale: 1/2"=1'-0"

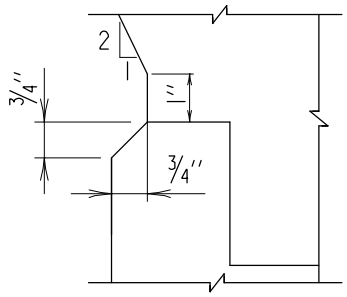

GROOVE DETAIL
Scale: 3"=1'-0"

42" DIAMOND BACK

APPROVAL	
E.S. Freedman DIRECTOR OFFICE OF STRUCTURES DATE: 6/1/05	
REVISIONS	
SHA	FHWA
11-14-05	
12-22-14	
FHWA APPROVAL	
DATE:	

STATE OF MARYLAND
DEPARTMENT OF TRANSPORTATION
STATE HIGHWAY ADMINISTRATION
OFFICE OF STRUCTURES

42" F-SHAPE PARAPET END POST WITH FENCING OR RAILING TRAIL END

STANDARD NO. SUB-EP(42F)-105 SHEET 4 OF 4

SUBSTRUCTURE - END POST

OLD NO. BR-SB(6.55)-05-370

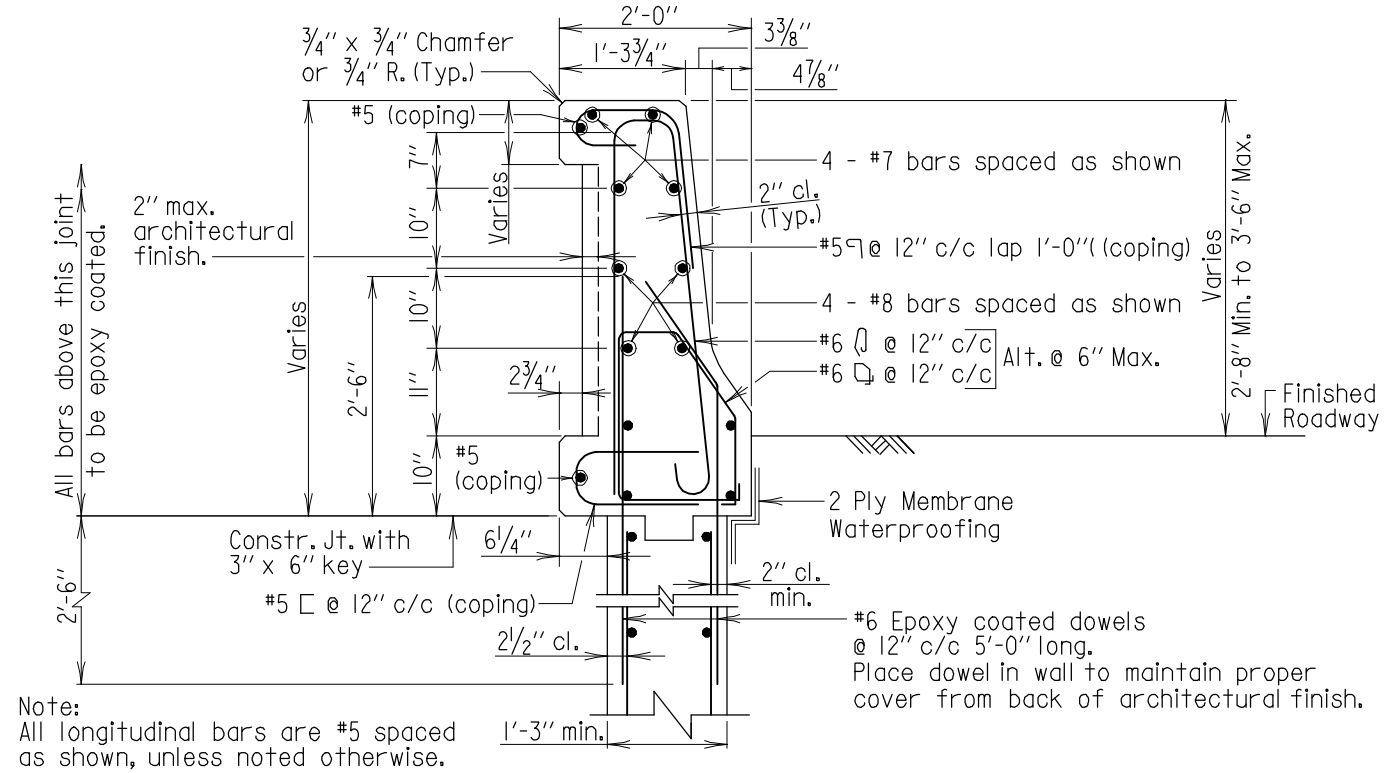

Note:
All longitudinal bars are #5 spaced as shown, unless noted otherwise.

SECTION D-D
Scale: 1/2" = 1'-0"

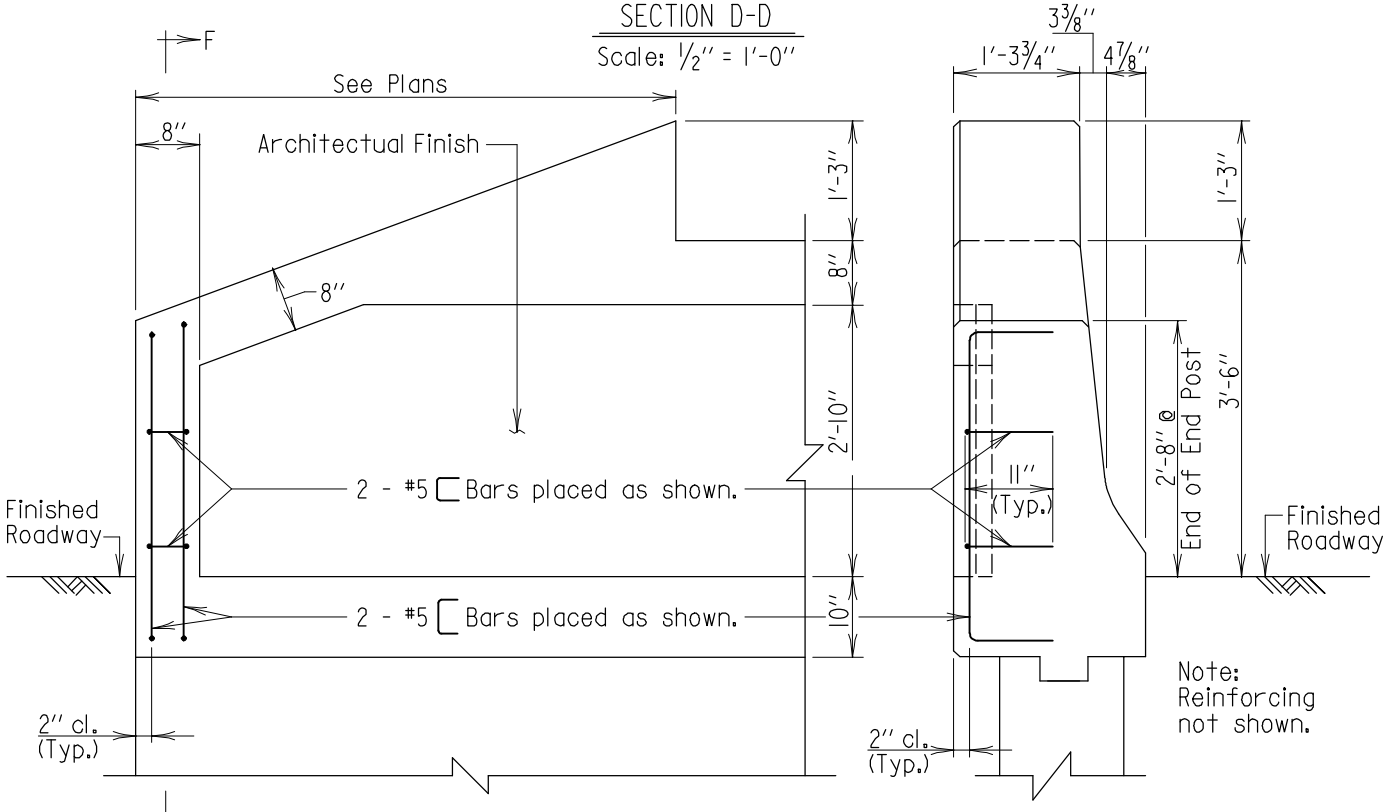

PARTIAL REAR ELEVATION
Scale: 1/2"=1'-0"

SECTION F-F
Scale: 1/2"=1'-0"

42" RECESSED BACK

Notes
1. Taper of coping to begin at concrete lug.
2. There is no View E-E for the 42" Recessed Back End Post.

APPROVAL	
E.S. Freedman DIRECTOR OFFICE OF STRUCTURES DATE: 6/1/05	
REVISIONS	
SHA	FHWA
11-14-05	
12-22-14	
FHWA APPROVAL	
DATE:	

STATE OF MARYLAND
DEPARTMENT OF TRANSPORTATION
STATE HIGHWAY ADMINISTRATION
OFFICE OF STRUCTURES

42" F-SHAPE PARAPET END POST WITH FENCING OR RAILING TRAIL END

STANDARD NO. SUB-EP(42F)-105 SHEET 4 OF 4

SUBSTRUCTURE - END POST

OLD NO. BR-SB(6.55)-05-370

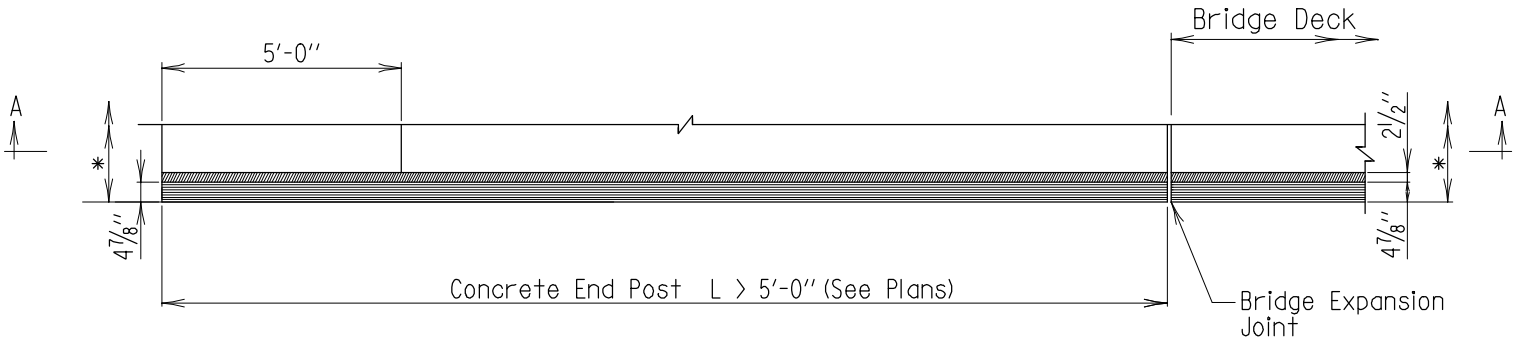

* For overall Parapet dimensions, see sheets 3 and 4 of 4.

PLAN

Scale: 1/4"=1'-0"

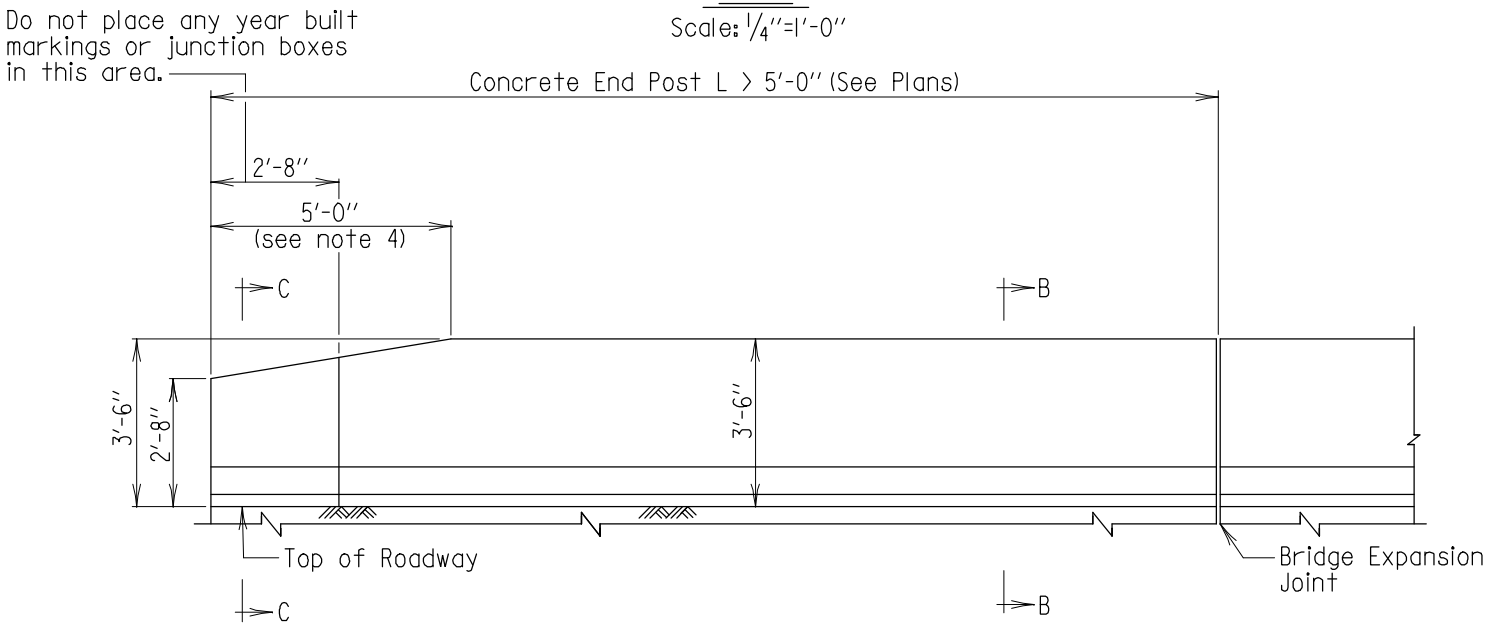

ELEVATION

Scale: 1/4"=1'-0"

Notes:
1. Use on the trail end of one way bridges.
2. W-Beam Traffic Barrier not shown.
3. For fence or Railing layout and details, see Plans.
4. Taper barrier height to 2'-8" when Thrie Beam is required. Taper to 3'-6" when adjacent to concrete F-Shape Barrier.

Note to Designer:
This standard contains details for straight back, diamond back and recessed back parapets. Include the appropriate shape in the Contract Plans.

APPROVAL
DIRECTOR OFFICE OF STRUCTURES
DATE: 6/1/05

REVISIONS

SHA	8-30-05
FHWA	

FHWA APPROVAL
DATE:

STATE OF MARYLAND
DEPARTMENT OF TRANSPORTATION
STATE HIGHWAY ADMINISTRATION
OFFICE OF STRUCTURES

42" F-SHAPE PARAPET END POST WITHOUT FENCING OR RAILING TRAIL END

STANDARD NO. SUB-EP(42F)-106

SHEET 1 OF 4

OLD NO. BR-SB(6.56)-05-371

SUBSTRUCTURE - END POST

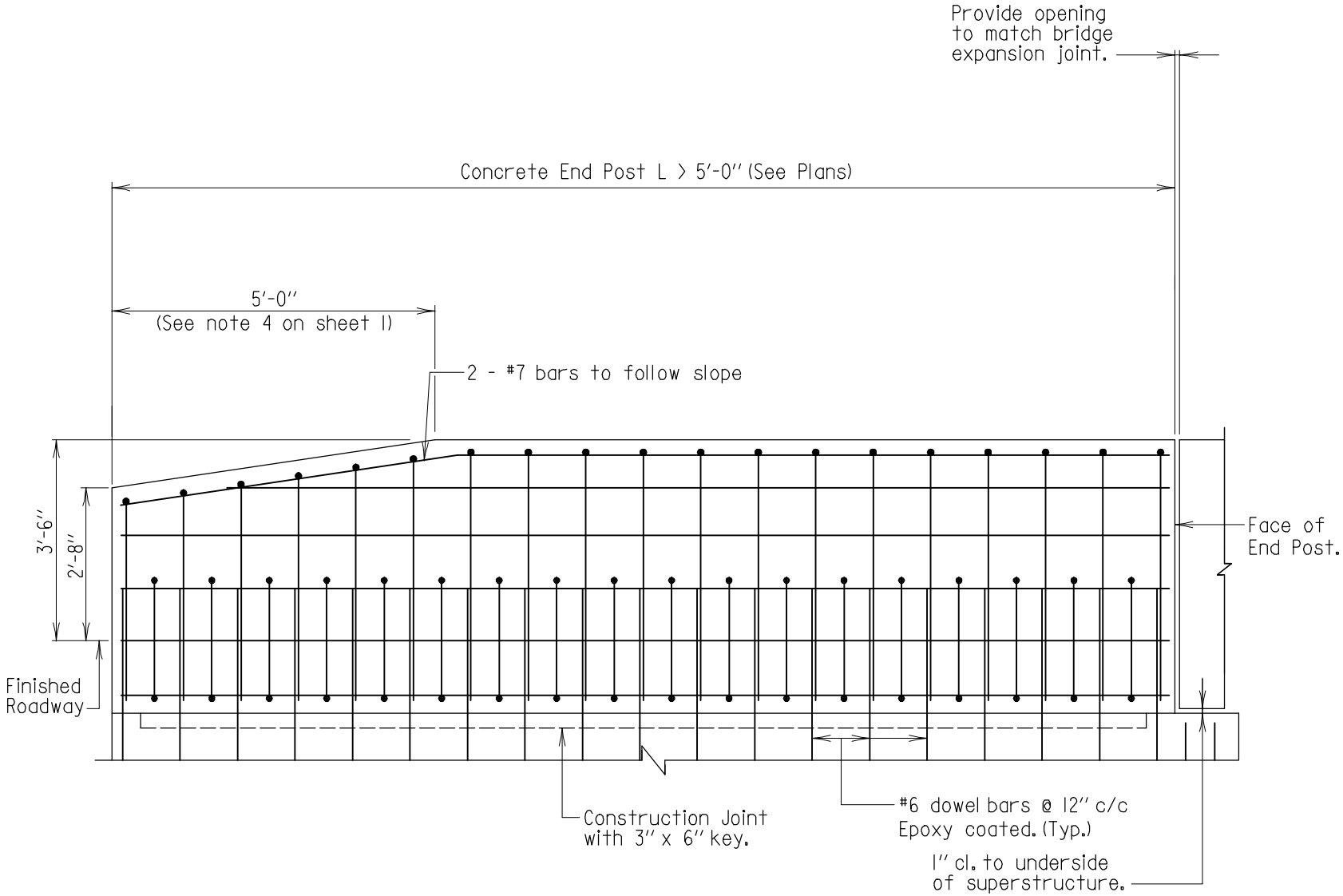

SECTION A-A

Scale: 3/8"=1'-0"

Notes:
1. For Parapet Reinforcing Details, see sheets 3 and 4.
2. Fencing or railing not shown.
3. If applicable, reinforcing for coping not shown.

Note to Designer:
This standard contains details for straight back, diamond back and recessed back parapets. Include the appropriate shape in the Contract Plans.

APPROVAL
OFFICE OF STRUCTURES DIRECTOR
DATE: 6/1/05

REVISIONS
SHA 11-14-05
FHWA

FHWA APPROVAL
DATE:

STATE OF MARYLAND
DEPARTMENT OF TRANSPORTATION
STATE HIGHWAY ADMINISTRATION
OFFICE OF STRUCTURES

42" F-SHAPE PARAPET END POST WITHOUT FENCING OR RAILING TRAIL END

STANDARD NO. SUN-EP(42F)-106

SHEET 2 OF 4

OLD NO. BR-SB(6.56)-05-371

SUBSTRUCTURE - END POST

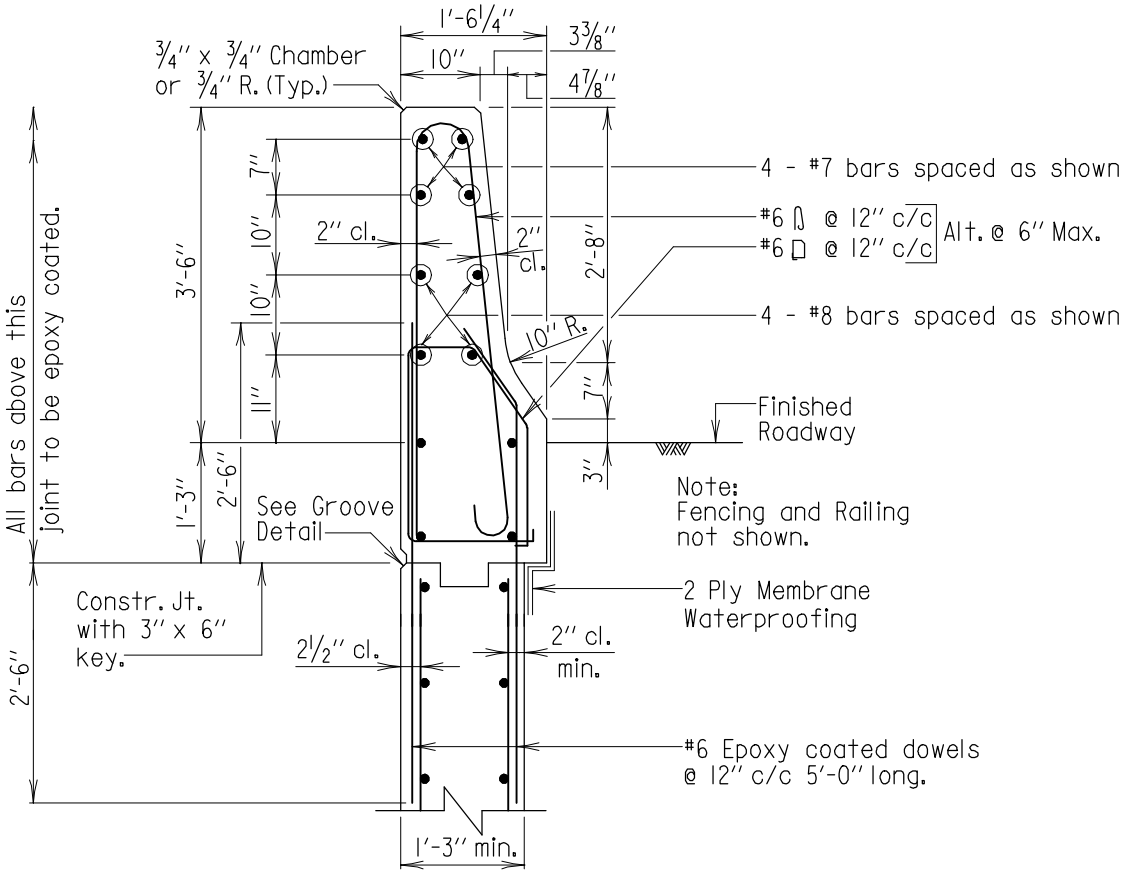

SECTION B-B

Scale: 1/2"=1'-0"

Note:
All longitudinal bars are #5 spaced as shown, unless noted otherwise.

42" STRAIGHT BACK

APPROVAL	
E.S. Freedman DIRECTOR OFFICE OF STRUCTURES DATE: 6/1/05	
REVISIONS	
SHA	FHWA
11-14-05	
12-22-14	
FHWA APPROVAL	
DATE:	

STATE OF MARYLAND
DEPARTMENT OF TRANSPORTATION
STATE HIGHWAY ADMINISTRATION
OFFICE OF STRUCTURES

42" F-SHAPE PARAPET END POST WITHOUT FENCING OR RAILING TRAIL END

STANDARD NO. SUB-EP(42F)-106 SHEET 3 OF 4

SUBSTRUCTURE - END POST

OLD NO. BR-SB(6.56)-05-371

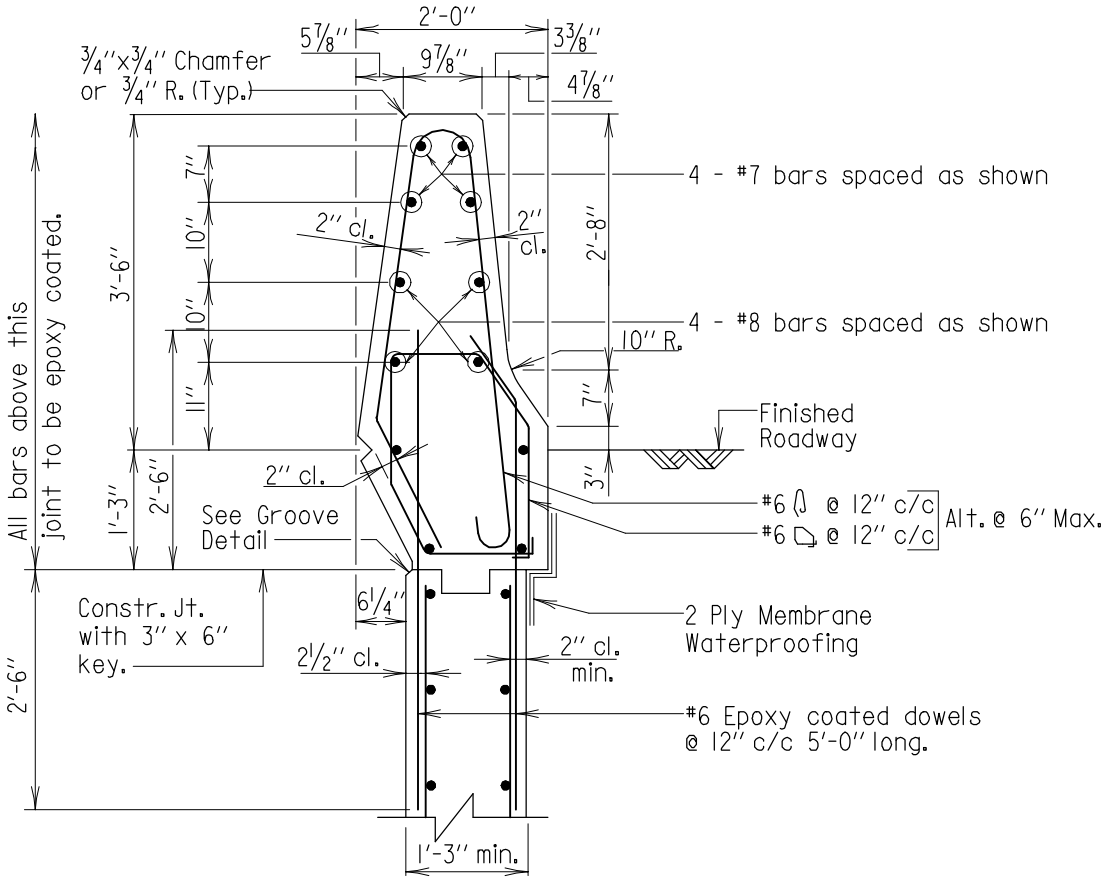

SECTION B-B

Scale: 1/2"=1'-0"

Note:
All longitudinal bars are #5 spaced as shown, unless noted otherwise.

42" DIAMOND BACK

APPROVAL	
E.S. Freedman DIRECTOR OFFICE OF STRUCTURES	
DATE: 6/1/05	
REVISIONS	
SHA	FHWA
11-14-05	
12-22-14	
FHWA APPROVAL	
DATE:	

STATE OF MARYLAND
DEPARTMENT OF TRANSPORTATION
STATE HIGHWAY ADMINISTRATION
OFFICE OF STRUCTURES

42" F-SHAPE PARAPET END POST WITHOUT FENCING OR RAILING TRAIL END

STANDARD NO. SUB-EP(42F)-106 SHEET 3 OF 4

SUBSTRUCTURE - END POST

OLD NO. BR-SB(6.56)-05-371

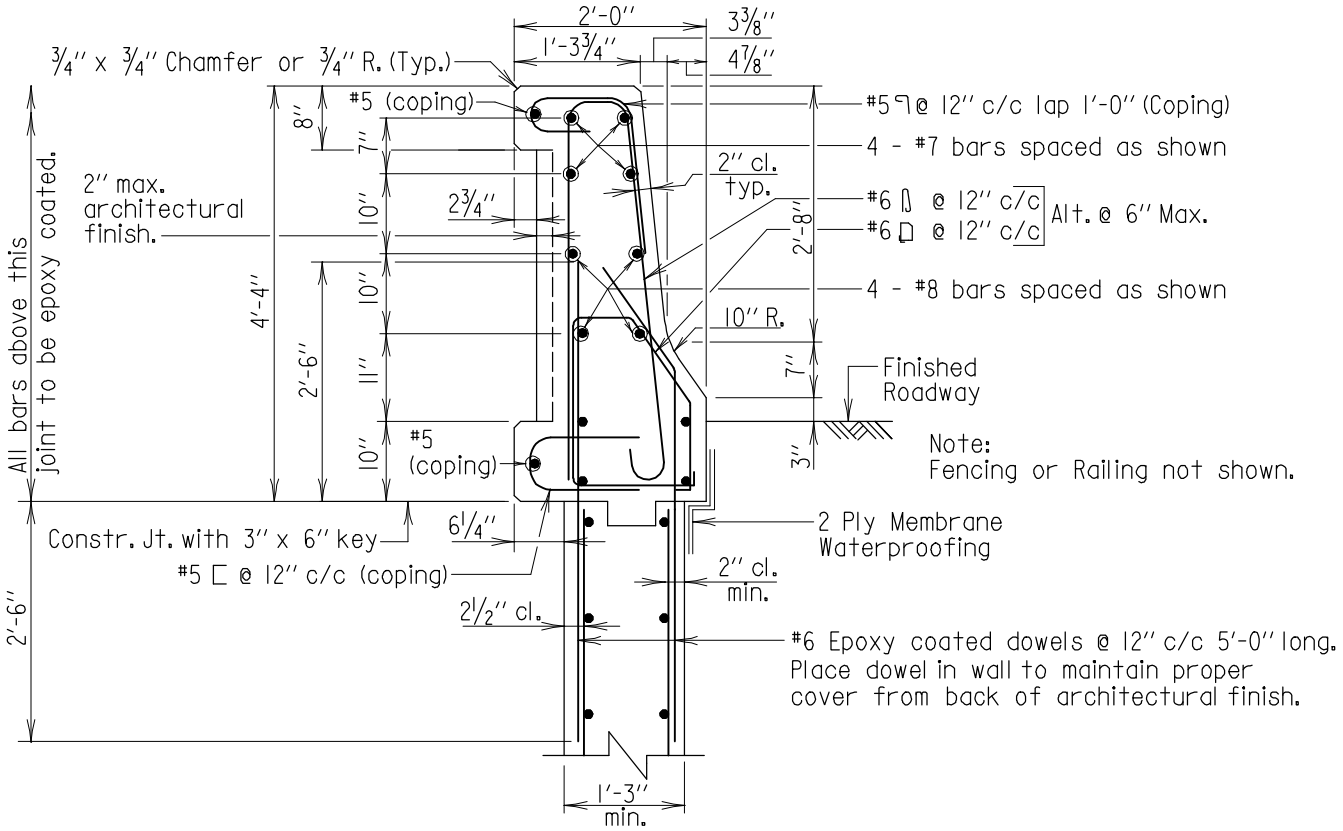

SECTION B-B

Scale: 1/2"=1'-0"

42" RECESSED BACK

Note:
All longitudinal bars are #5 spaced as shown, unless noted otherwise.

APPROVAL	
E.S. Freedman DIRECTOR OFFICE OF STRUCTURES DATE: 6/1/05	
REVISIONS	
SHA	FHWA
11-14-05	
12-12-08	
12-22-14	

FHWA APPROVAL	
DATE:	

STATE OF MARYLAND
DEPARTMENT OF TRANSPORTATION
STATE HIGHWAY ADMINISTRATION
OFFICE OF STRUCTURES

42" F-SHAPE PARAPET END POST WITHOUT FENCING OR RAILING TRAIL END

STANDARD NO. SUB-EP(42F)-106 SHEET 3 OF 4

SUBSTRUCTURE - END POST

OLD NO. BR-SB(6.56)-05-371

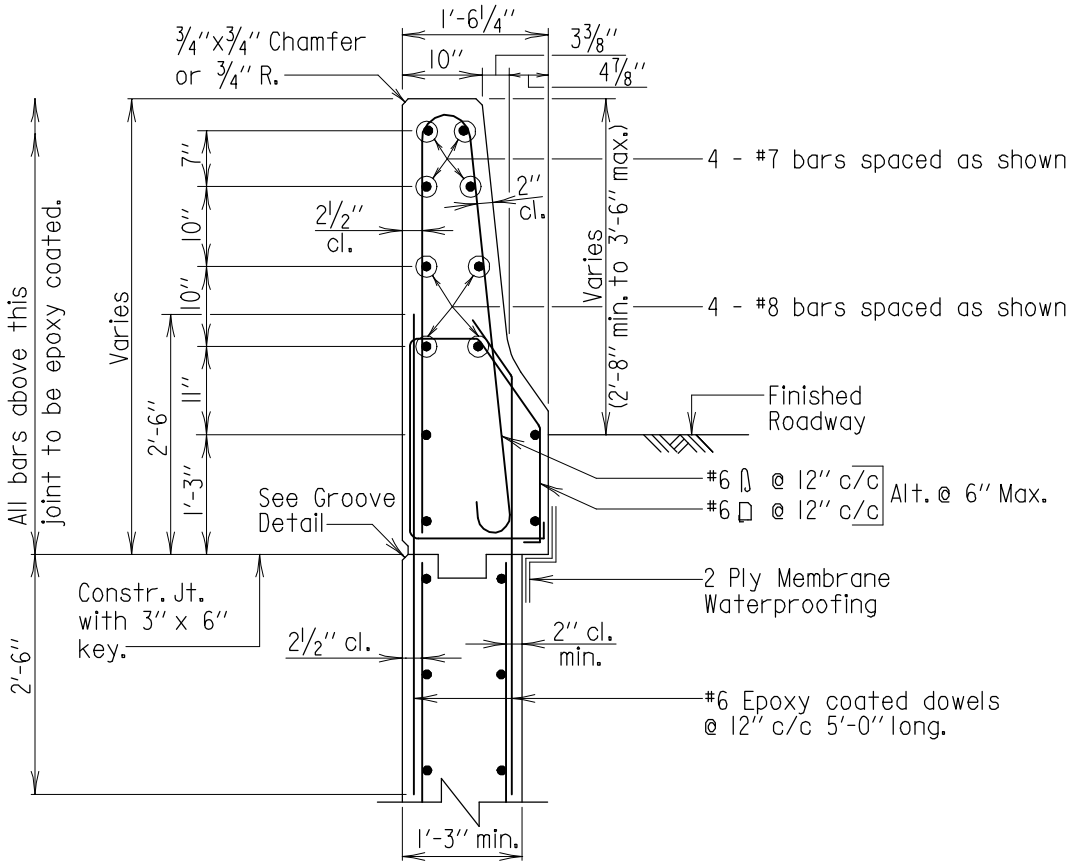

SECTION C-C

Scale: 1/2"=1'-0"

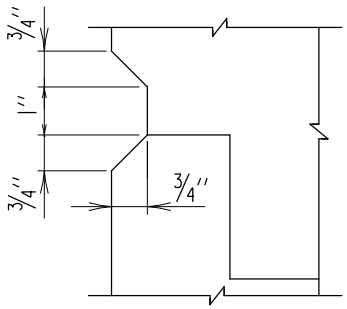

GROOVE DETAIL

Scale: 3"=1'-0"

Note:
All longitudinal bars are #5 spaced as shown, unless noted otherwise.

42" STRAIGHT BACK

APPROVAL	
E.S. Freedman DIRECTOR OFFICE OF STRUCTURES DATE: 6/1/05	
REVISIONS	
SHA	FHWA
11-14-05	
12-22-14	
FHWA APPROVAL	
DATE:	

STATE OF MARYLAND
DEPARTMENT OF TRANSPORTATION
STATE HIGHWAY ADMINISTRATION
OFFICE OF STRUCTURES

42" F-SHAPE PARAPET END POST WITHOUT FENCING OR RAILING TRAIL END

STANDARD NO. SUB-EP(42F)-106 SHEET 4 OF 4

SUBSTRUCTURE - END POST

OLD NO. BR-SB(6.56)-05-371

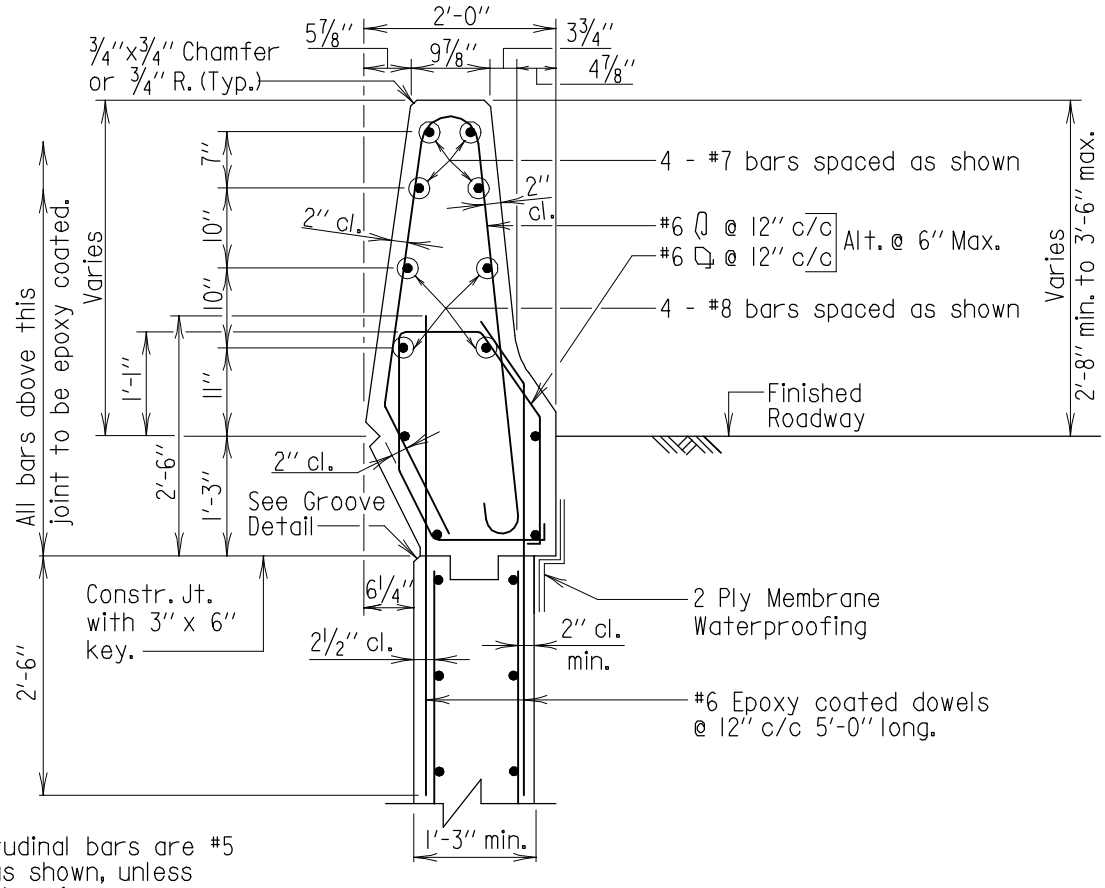

Note:
All longitudinal bars are #5 spaced as shown, unless noted otherwise.

SECTION C-C

Scale: 1/2"=1'-0"

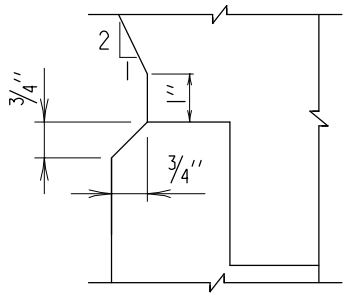

GROOVE DETAIL

Scale: 3"=1'-0"

42" DIAMOND BACK

APPROVAL		
E.S. Freedman DIRECTOR OFFICE OF STRUCTURES DATE: 6/1/05		
REVISIONS		
SHA	FHWA	
11-14-05		
12-22-14		
FHWA APPROVAL		
DATE:		

STATE OF MARYLAND
DEPARTMENT OF TRANSPORTATION
STATE HIGHWAY ADMINISTRATION
OFFICE OF STRUCTURES

42" F-SHAPE PARAPET END POST WITHOUT FENCING OR RAILING TRAIL END

STANDARD NO. SUB-EP(42F)-106

SHEET 4 OF 4

SUBSTRUCTURE - END POST

OLD NO. BR-SB(6.56)-05-371

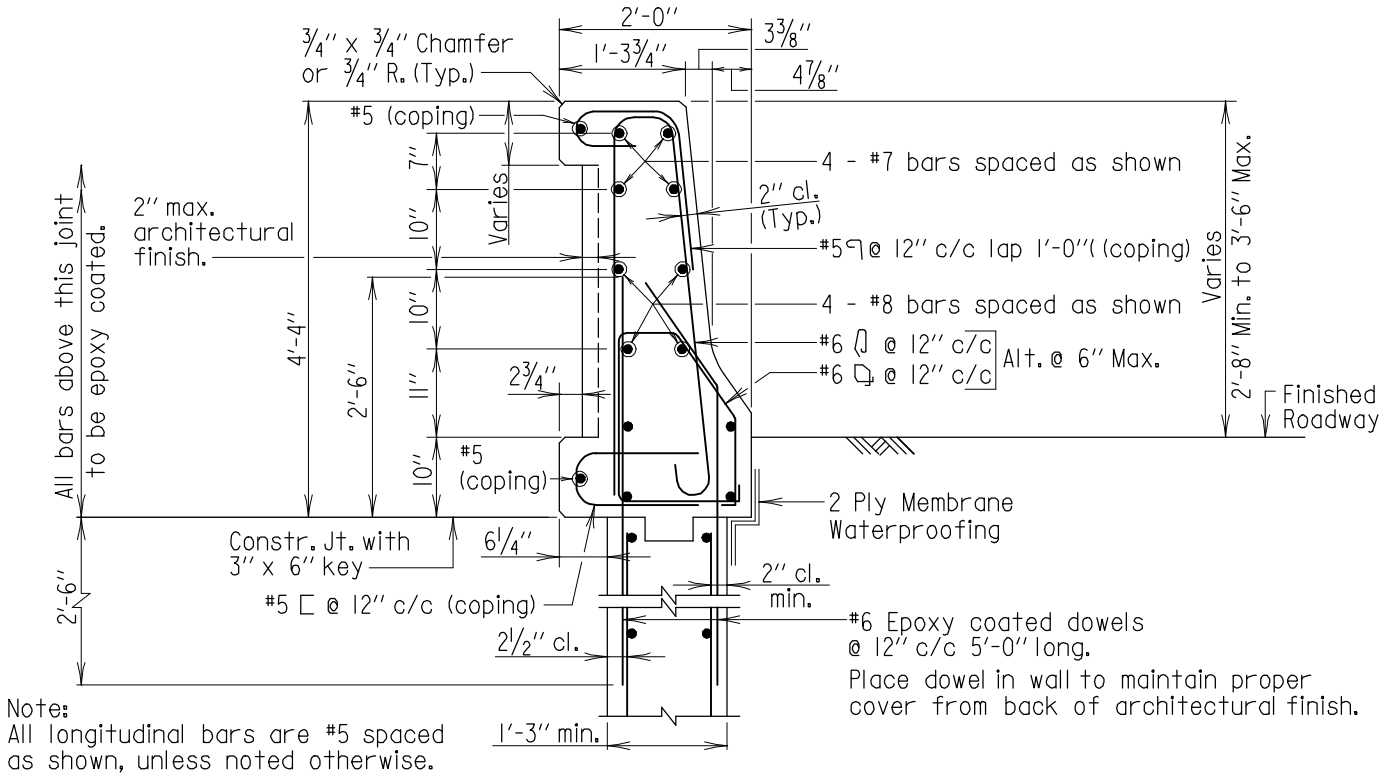

Note:
All longitudinal bars are #5 spaced as shown, unless noted otherwise.

SECTION C-C
Scale: ½" = 1'-0"

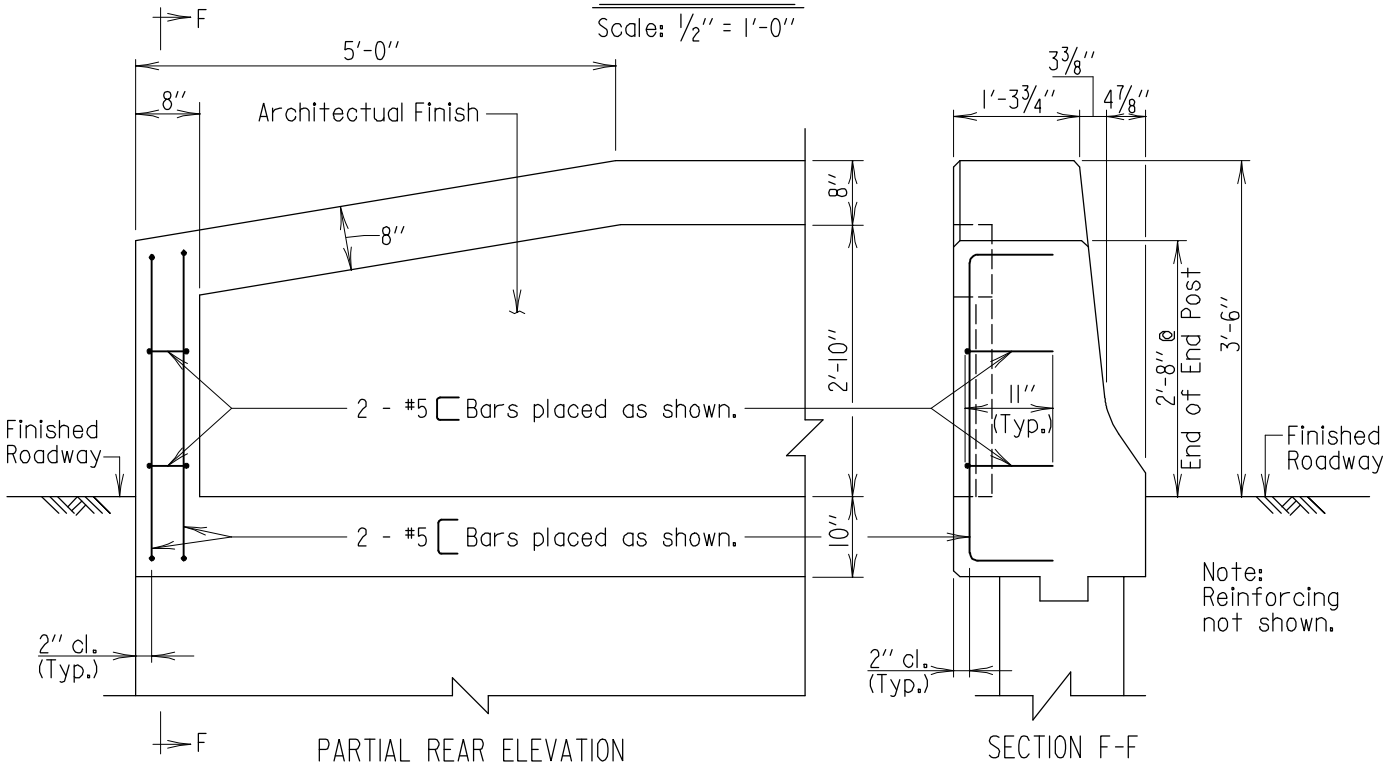

Note:
Reinforcing not shown.

PARTIAL REAR ELEVATION
Scale: ½"=1'-0"

SECTION F-F
Scale: ½"=1'-0"

42" RECESSED BACK

Notes:
1. Taper of coping to begin at concrete lug.
2. There is no View E-E for the 42" Recessed Back End Post.

APPROVAL	
DIRECTOR OFFICE OF STRUCTURES	
DATE: 6/1/05	
REVISIONS	
SHA	FHWA
8-30-05	
11-14-05	
12-22-14	
FHWA APPROVAL	
DATE:	

STATE OF MARYLAND
DEPARTMENT OF TRANSPORTATION
STATE HIGHWAY ADMINISTRATION
OFFICE OF STRUCTURES

42" F-SHAPE PARAPET END POST WITHOUT FENCING OR RAILING TRAIL END

STANDARD NO. SUB-EP(42F)-106

SHEET 4 OF 4

SUBSTRUCTURE - END POST

OLD NO. BR-SB(6.56)-05-371

SUBSTRUCTURE

END POST – SIDEWALK

(SUB-EP(SW))

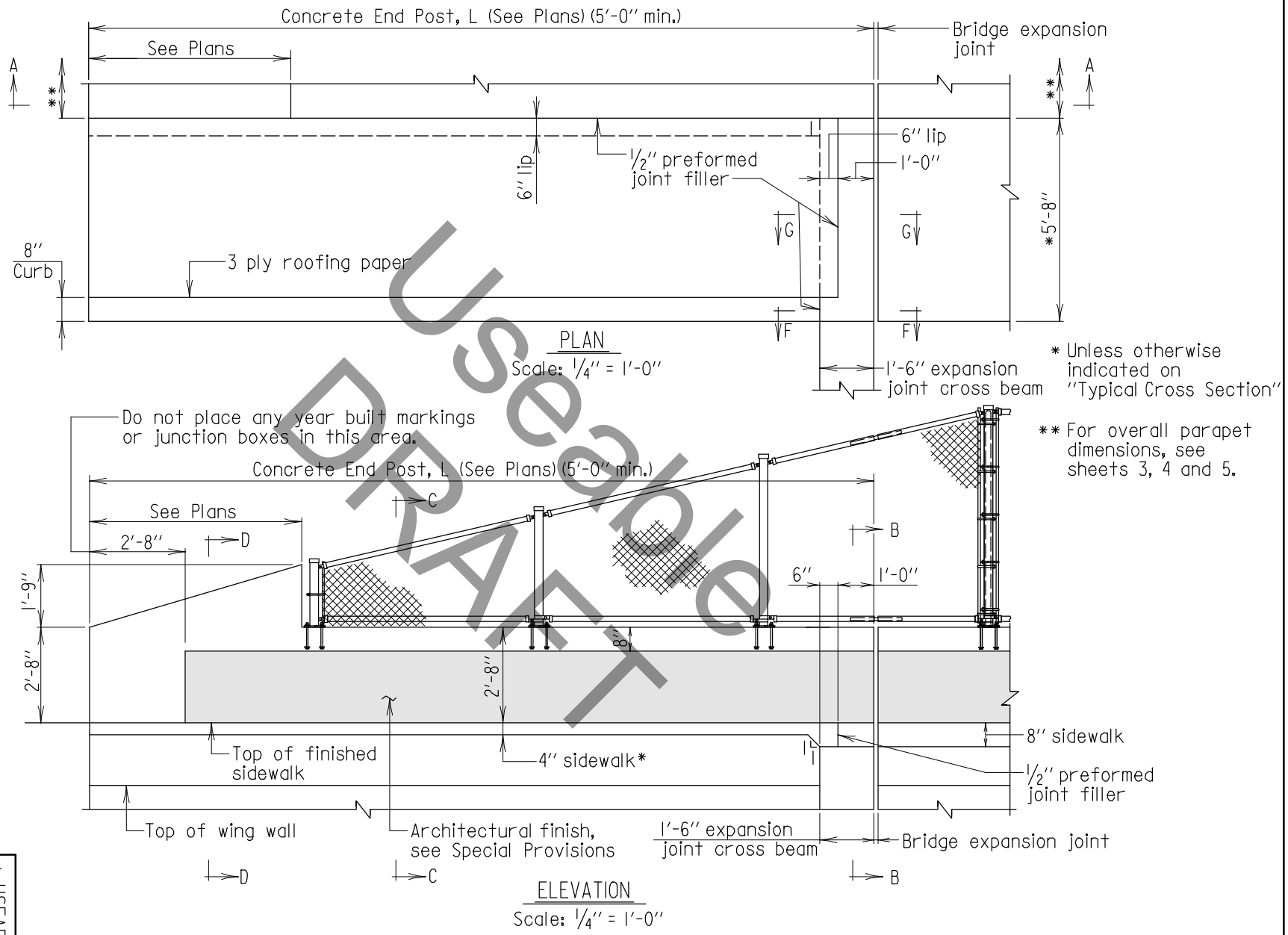

Useable DRAFT

Notes:
1. Use on approach and trail end of bridges with sidewalks.
2. Type I Fence shown, see plans for fence or railing layout and details.
3. Thrie Beam Attachment not shown.

Note to Designer:
This standard contains details for straight back, diamond back and recessed back parapets. Include the appropriate shape in the Contract Plans.

APPROVAL
DIRECTOR
OFFICE OF STRUCTURES
DATE: 09/01/15

REVISIONS
SHA
FHWA

FHWA APPROVAL
DATE:

STATE OF MARYLAND
DEPARTMENT OF TRANSPORTATION
STATE HIGHWAY ADMINISTRATION
OFFICE OF STRUCTURES

PARAPET ENDPOST FOR ABUTMENTS WITH EXPANSION JOINT CROSS BEAM AND SIDEWALK

NO. SUB-EP(SW)-101

SHEET 1 OF 5

* USEABLE DRAFT *

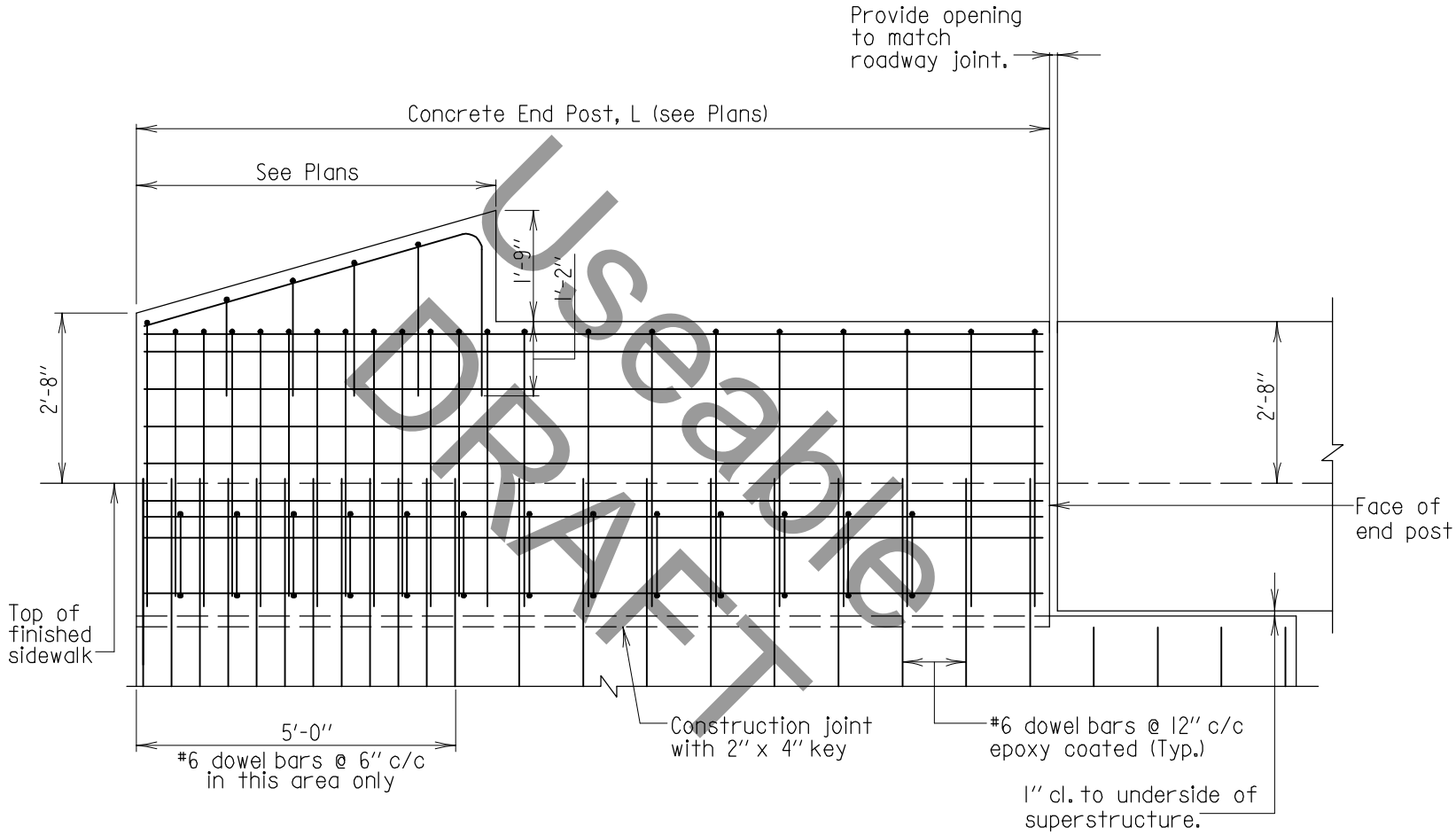

SECTION A-A

Scale: 3/8"=1'-0"

Notes:
1. For parapet reinforcing details, see sheets 3, 4 and 5.
2. If applicable, reinforcing for coping not shown.
3. Fencing or railing not shown.

Note to Designer:
This standard contains details for straight back, diamond back and recessed back parapets. Include the appropriate shape in the Contract Plans.

Useable DRAFT

* USEABLE DRAFT *

STATE OF MARYLAND
DEPARTMENT OF TRANSPORTATION
STATE HIGHWAY ADMINISTRATION
OFFICE OF STRUCTURES

PARAPET ENDPOST FOR ABUTMENTS WITH
EXPANSION JOINT CROSS BEAM AND SIDEWALK

NO. SUB-EP(SW)-101

SHEET 2 OF 5

APPROVAL
DIRECTOR
OFFICE OF STRUCTURES
DATE: 09/01/15

REVISIONS
SHA
FHWA

FHWA APPROVAL
DATE:

OLD NO. N/A

SUBSTRUCTURE - END POST

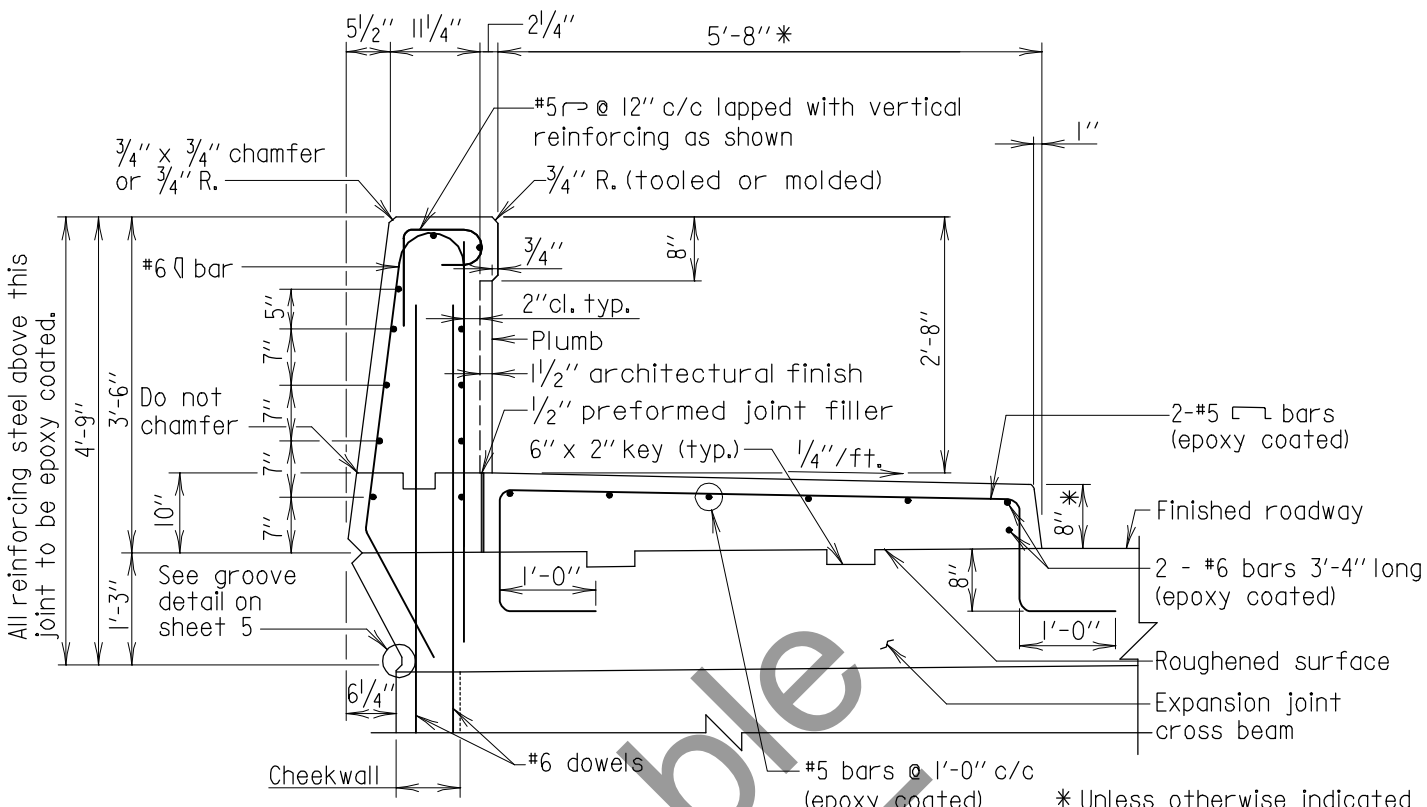

* Unless otherwise indicated on "Typical Cross Section".

** Unless otherwise indicated on highway sheets.

SECTION B-B

Scale: ½" = 1'-0"

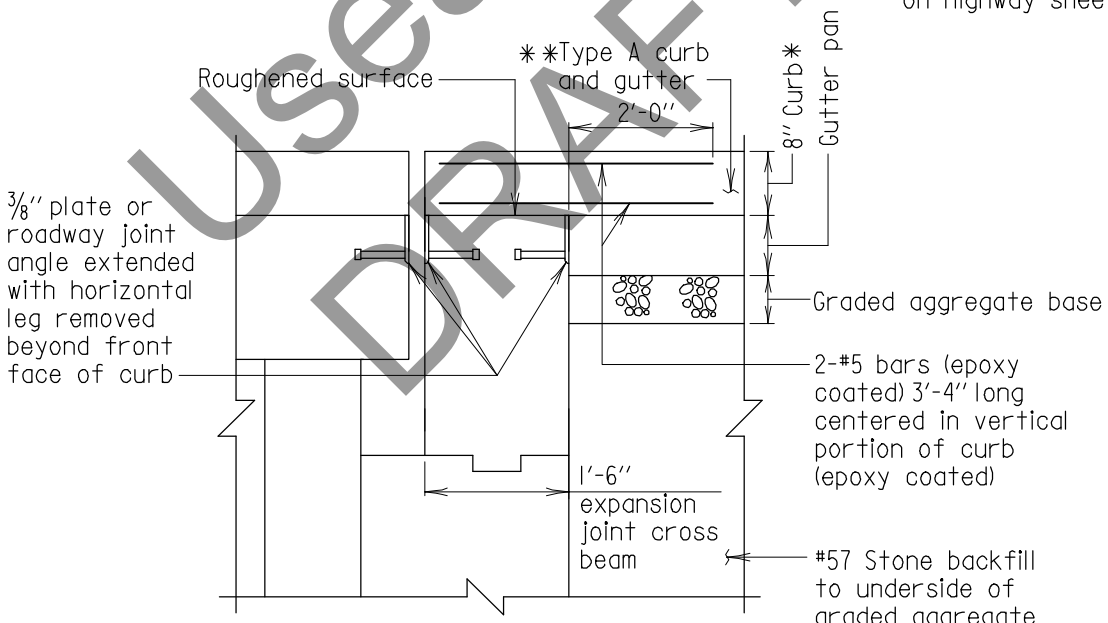

SECTION F-F
CURB TREATMENT AT ABUTMENT

Scale: ½"=1'-0"

Useable DRAFT

Notes:

1. All longitudinal bars are #5 spaced as shown.
2. Fencing or railing not shown.
3. Abutment Backwall dimensions and reinforcing not shown.

DIAMOND BACK

* USEABLE DRAFT *

APPROVAL	
_____ DIRECTOR OFFICE OF STRUCTURES	
DATE: 09/01/15	
REVISIONS	
SHA	FHWA
FHWA APPROVAL	
DATE:	

STATE OF MARYLAND
DEPARTMENT OF TRANSPORTATION
STATE HIGHWAY ADMINISTRATION
OFFICE OF BRIDGE DEVELOPMENT

PARAPET ENDPOST FOR ABUTMENTS WITH EXPANSION JOINT CROSS BEAM AND SIDEWALK

NO. SUB-EP(SW)-101 SHEET 3 OF 5

SUBSTRUCTURE - END POST

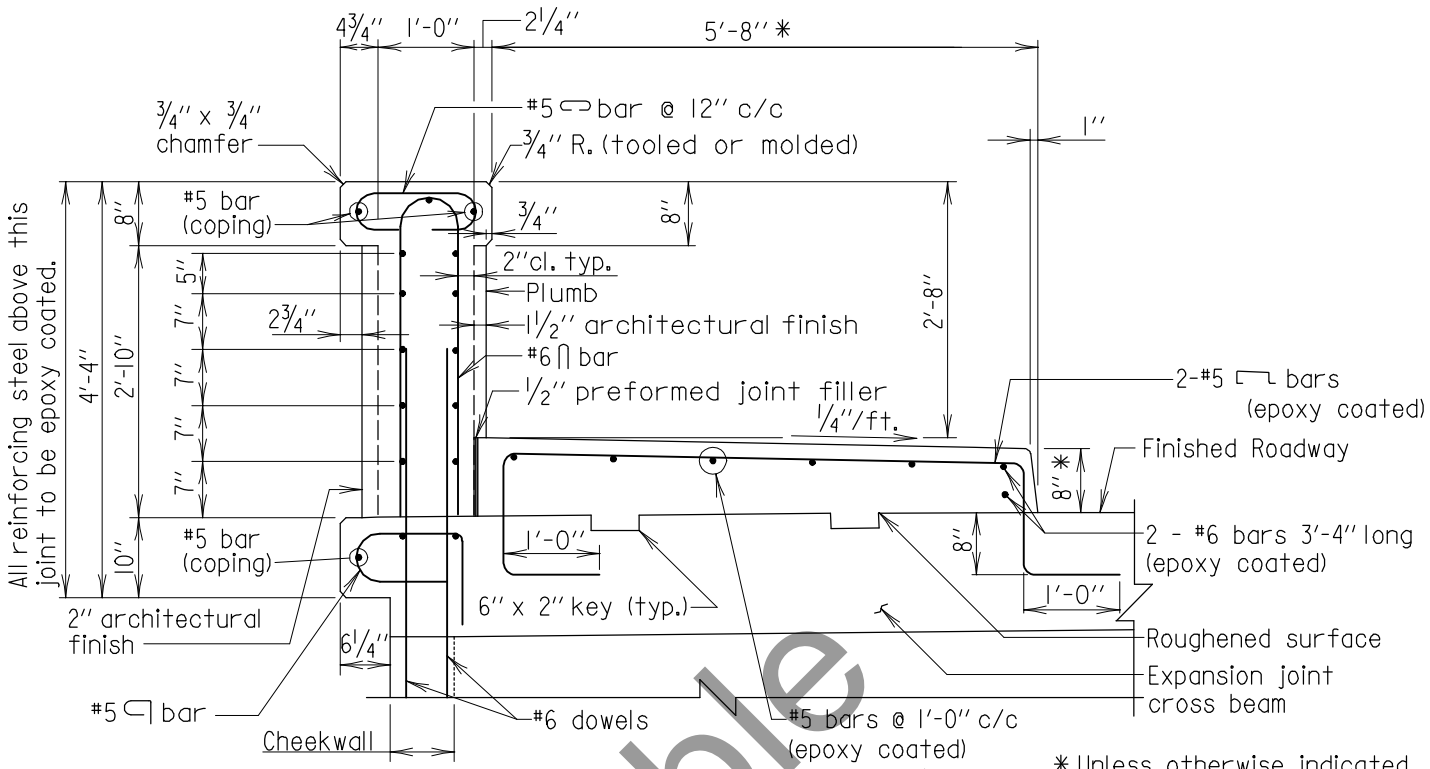

SECTION B-B

Scale: 1/2" = 1'-0"

* Unless otherwise indicated on "Typical Cross Section".

** Unless otherwise indicated on Highway Sheets.

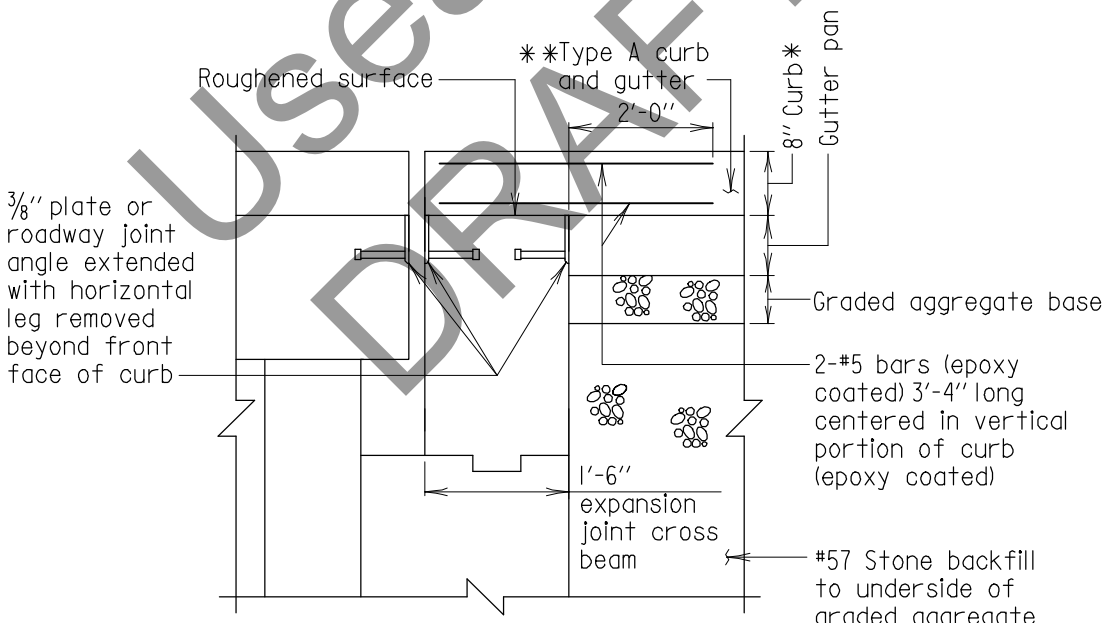

SECTION F-F
CURB TREATMENT AT ABUTMENT

Scale: 1/2"=1'-0"

Useable DRAFT

Notes:

1. All longitudinal bars are #5 spaced as shown.
2. Fencing or railing not shown.
3. Abutment Backwall dimensions and reinforcing not shown.

RECESSED BACK

* USEABLE DRAFT *

APPROVAL	
_____ DIRECTOR OFFICE OF STRUCTURES	
DATE: 09/01/15	
REVISIONS	
SHA	FHWA
FHWA APPROVAL	
DATE:	

STATE OF MARYLAND
DEPARTMENT OF TRANSPORTATION
STATE HIGHWAY ADMINISTRATION
OFFICE OF STRUCTURES

PARAPET ENDPOST FOR ABUTMENTS WITH EXPANSION JOINT CROSS BEAM AND SIDEWALK

NO. SUB-EP(SW)-101 SHEET 3 OF 5

SUBSTRUCTURE - END POST

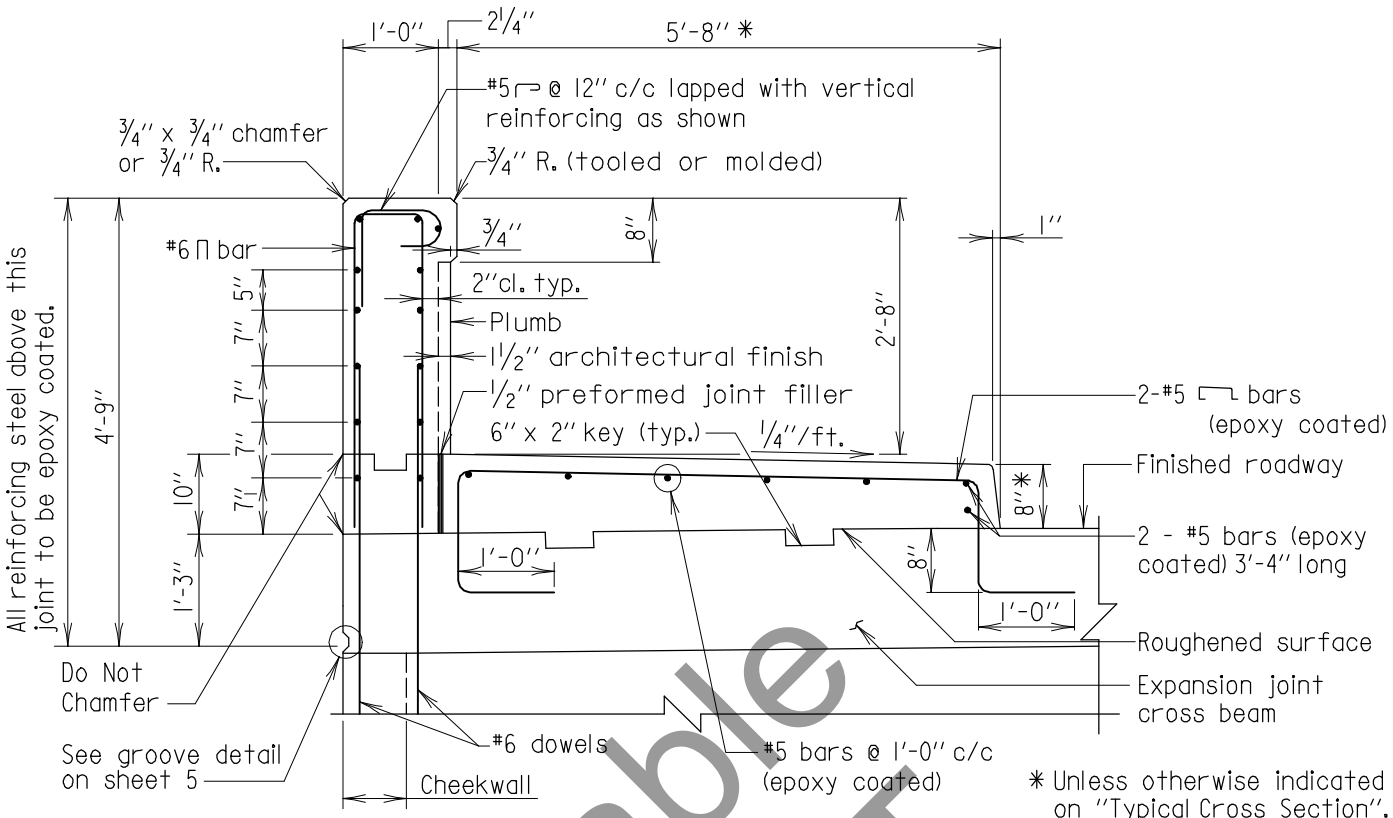

SECTION B-B

Scale: 1/2" = 1'-0"

* Unless otherwise indicated on "Typical Cross Section".

** Unless otherwise indicated on highway sheets.

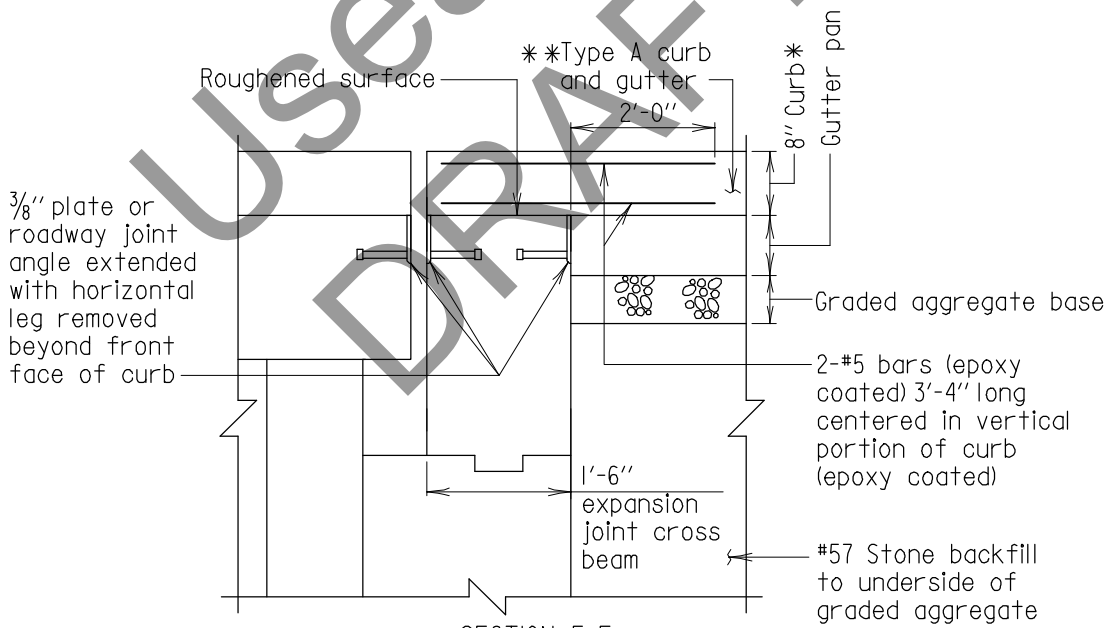

SECTION F-F
CURB TREATMENT AT ABUTMENT

Scale: 1/2"=1'-0"

Useable DRAFT

Notes:

1. All longitudinal bars are #5 spaced as shown.
2. Fencing or railing not shown.
3. Abutment Backwall dimensions and reinforcing not shown.

STRAIGHT BACK

* USEABLE DRAFT *

APPROVAL	
_____ DIRECTOR OFFICE OF STRUCTURES	
DATE: 09/01/15	
REVISIONS	
SHA	FHWA
FHWA APPROVAL	
DATE:	

STATE OF MARYLAND
DEPARTMENT OF TRANSPORTATION
STATE HIGHWAY ADMINISTRATION
OFFICE OF STRUCTURES

PARAPET ENDPOST FOR ABUTMENTS WITH EXPANSION JOINT CROSS BEAM AND SIDEWALK

NO. SUB-EP(SW)-101 SHEET 3 OF 5

SUBSTRUCTURE -END POST

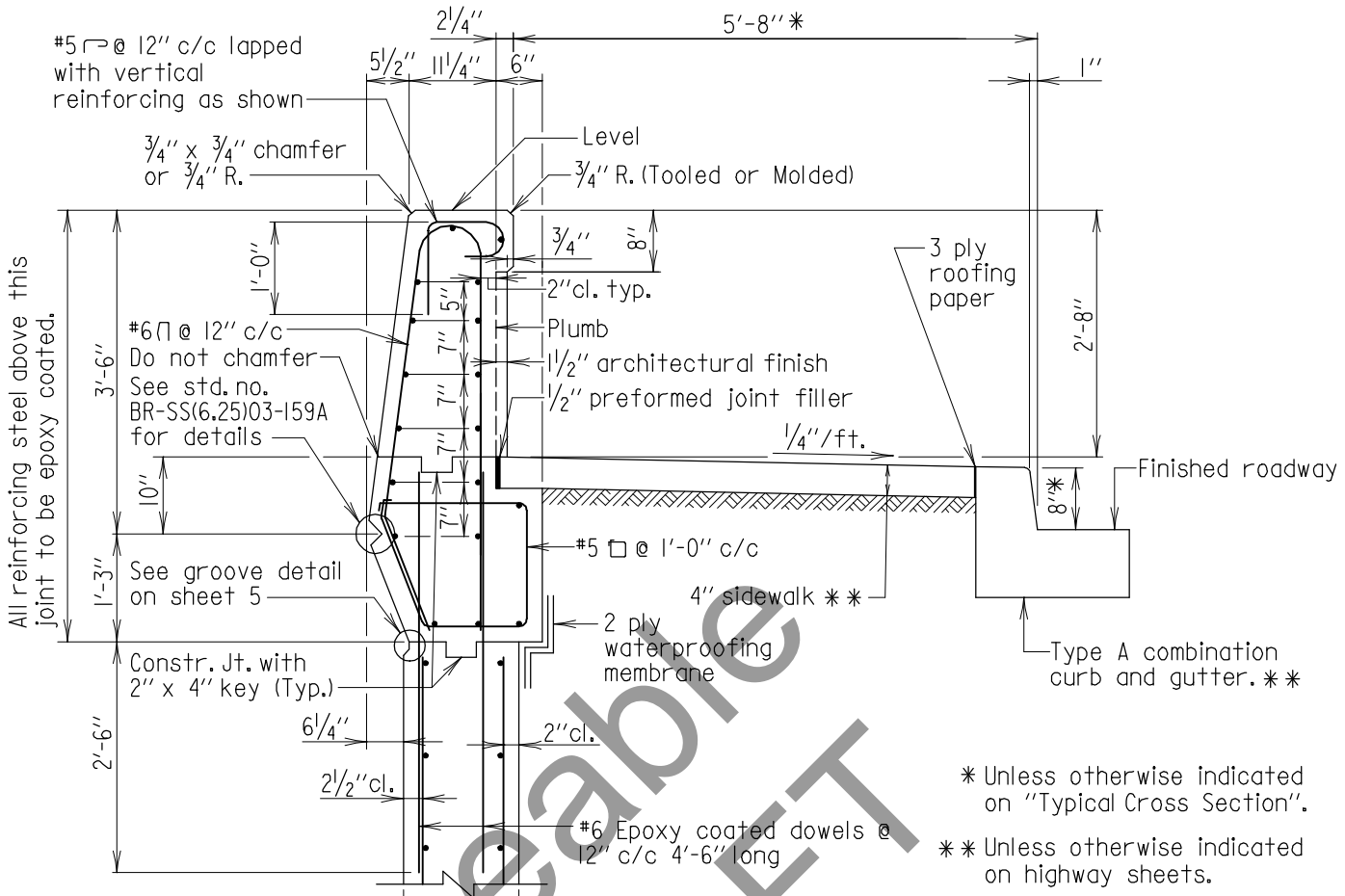

* Unless otherwise indicated on "Typical Cross Section".

** Unless otherwise indicated on highway sheets.

SECTION C-C

Scale: 1/2" = 1'-0"

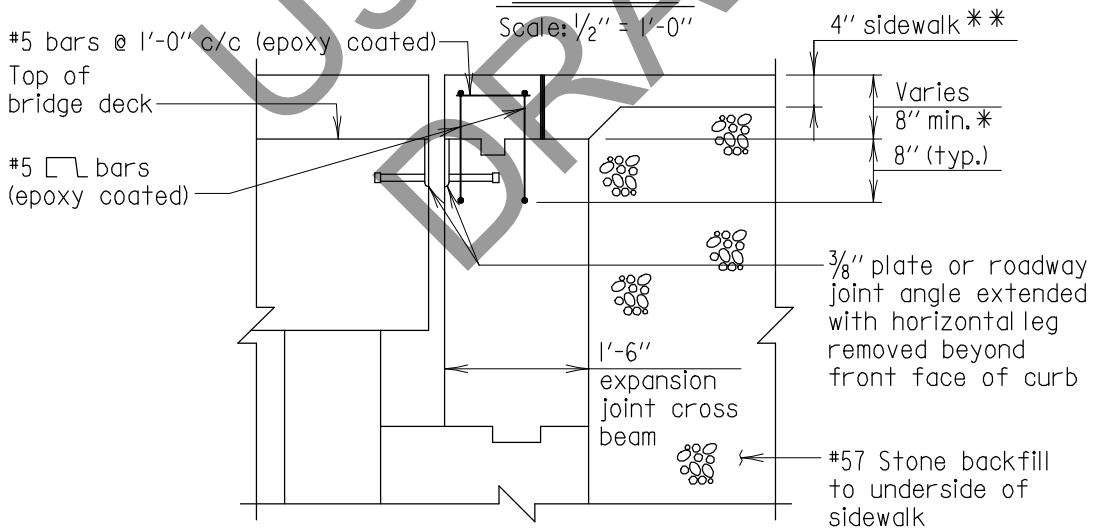

SECTION G-G
SIDEWALK TREATMENT AT ABUTMENT

Scale: 1/2"=1'-0"

Notes:
1. All longitudinal bars are #5 spaced as shown.
2. Fencing or railing not shown.

DIAMOND BACK

* USEABLE DRAFT *

APPROVAL	
_____ DIRECTOR OFFICE OF STRUCTURES DATE: 09/01/15	
REVISIONS	
SHA	FHWA
FHWA APPROVAL	
DATE:	

STATE OF MARYLAND
DEPARTMENT OF TRANSPORTATION
STATE HIGHWAY ADMINISTRATION
OFFICE OF STRUCTURES

PARAPET ENDPOST FOR ABUTMENTS WITH EXPANSION JOINT CROSS BEAM AND SIDEWALK

NO. SUB-EP(SW)-101 SHEET 4 OF 5

SUBSTRUCTURE - END POST

Useable DRAFT

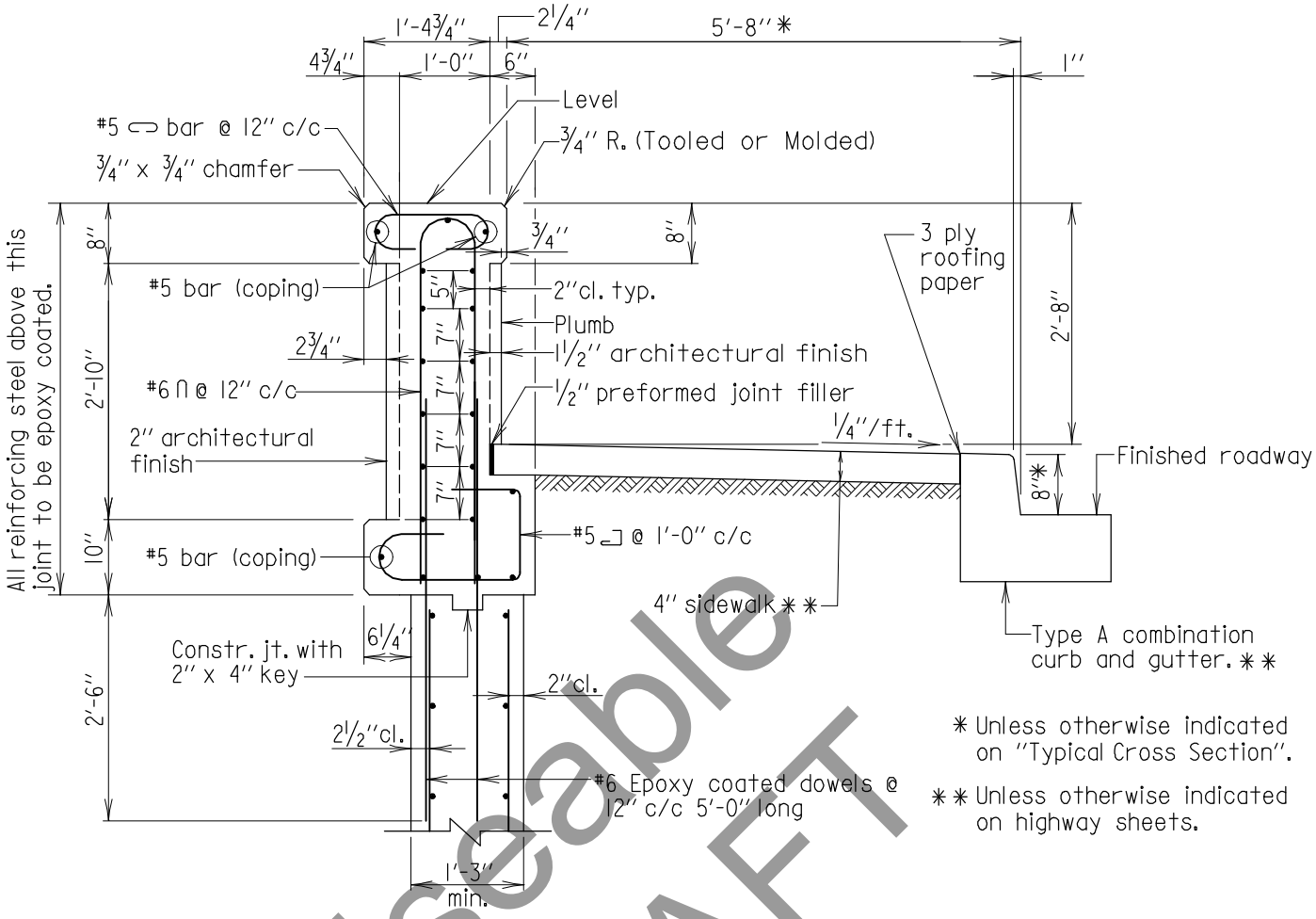

* Unless otherwise indicated on "Typical Cross Section".

** Unless otherwise indicated on highway sheets.

SECTION C-C

Scale: 1/2" = 1'-0"

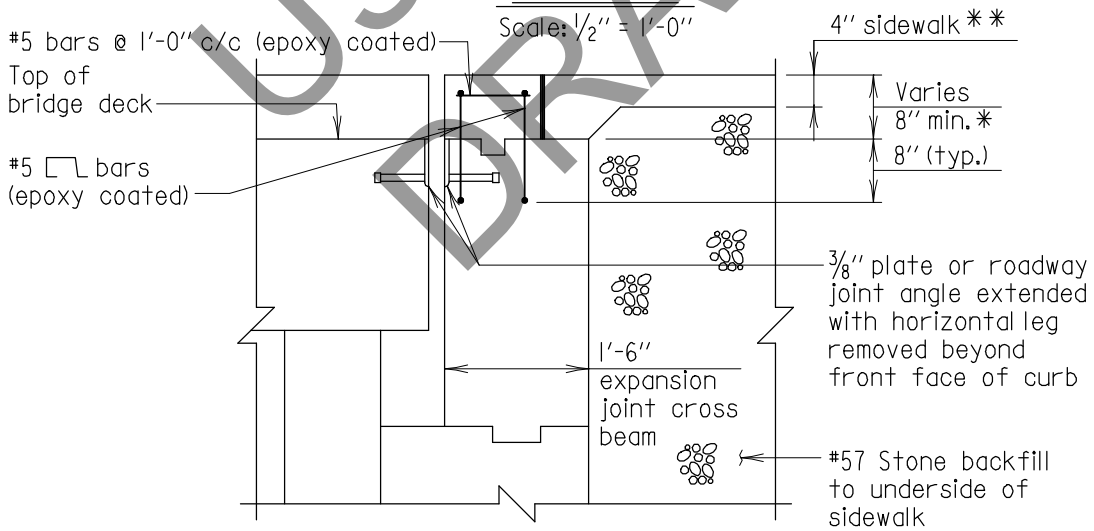

SECTION G-G
SIDEWALK TREATMENT AT ABUTMENT

Scale: 1/2"=1'-0"

RECESSED BACK

* USEABLE DRAFT *

Notes:
1. All longitudinal bars are #5 spaced as shown.
2. Fencing or railing not shown.

APPROVAL	
_____ DIRECTOR OFFICE OF STRUCTURES DATE: 09/01/15	
REVISIONS	
SHA	FHWA
FHWA APPROVAL	
DATE:	

STATE OF MARYLAND
DEPARTMENT OF TRANSPORTATION
STATE HIGHWAY ADMINISTRATION
OFFICE OF STRUCTURES

PARAPET ENDPOST FOR ABUTMENTS WITH EXPANSION JOINT CROSS BEAM AND SIDEWALK

NO. SUB-EP(SW)-101 SHEET 4 OF 5

SUBSTRUCTURE - END POST

Useable DRAFT

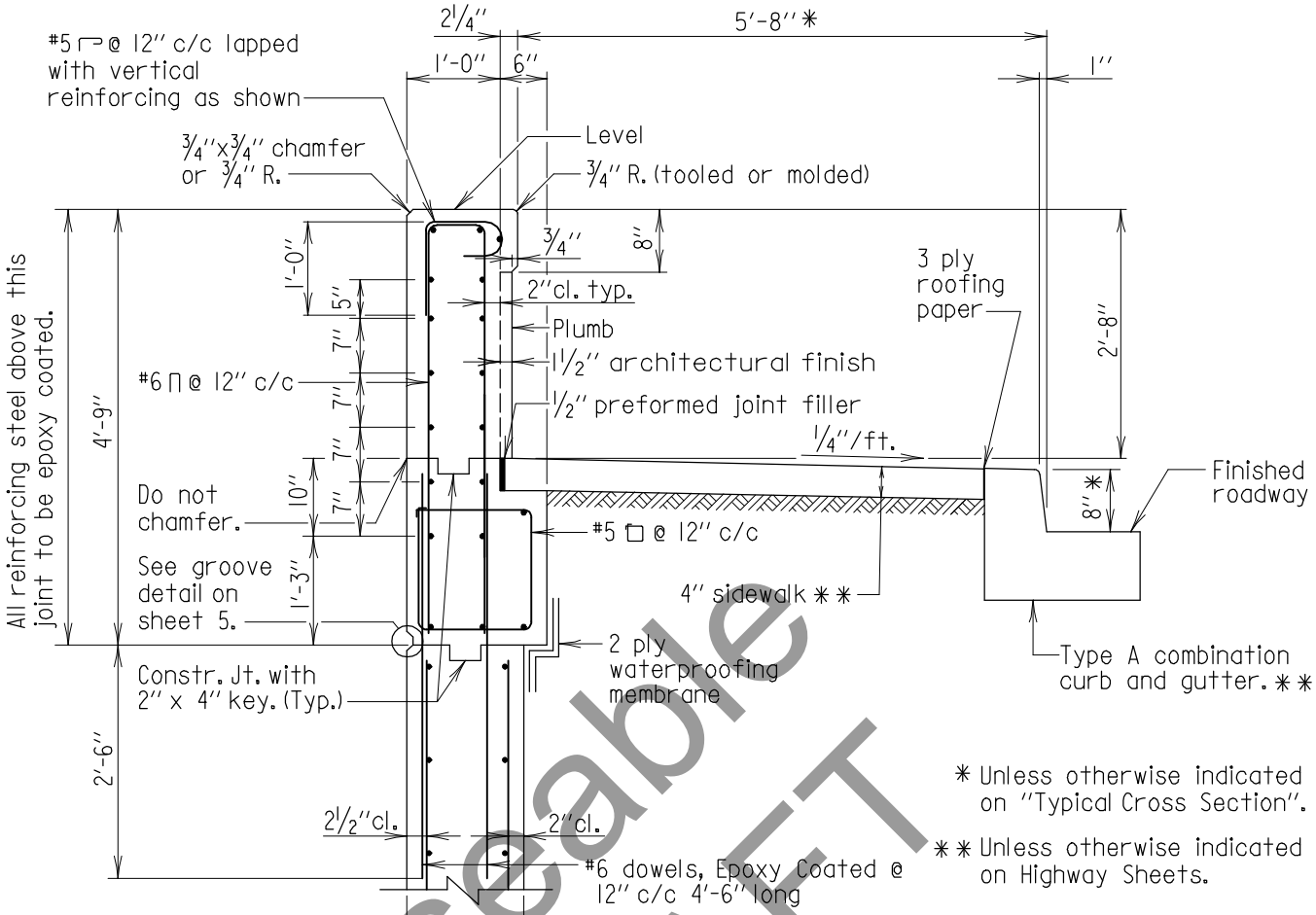

* Unless otherwise indicated on "Typical Cross Section".

** Unless otherwise indicated on Highway Sheets.

SECTION C-C

Scale: 1/2" = 1'-0"

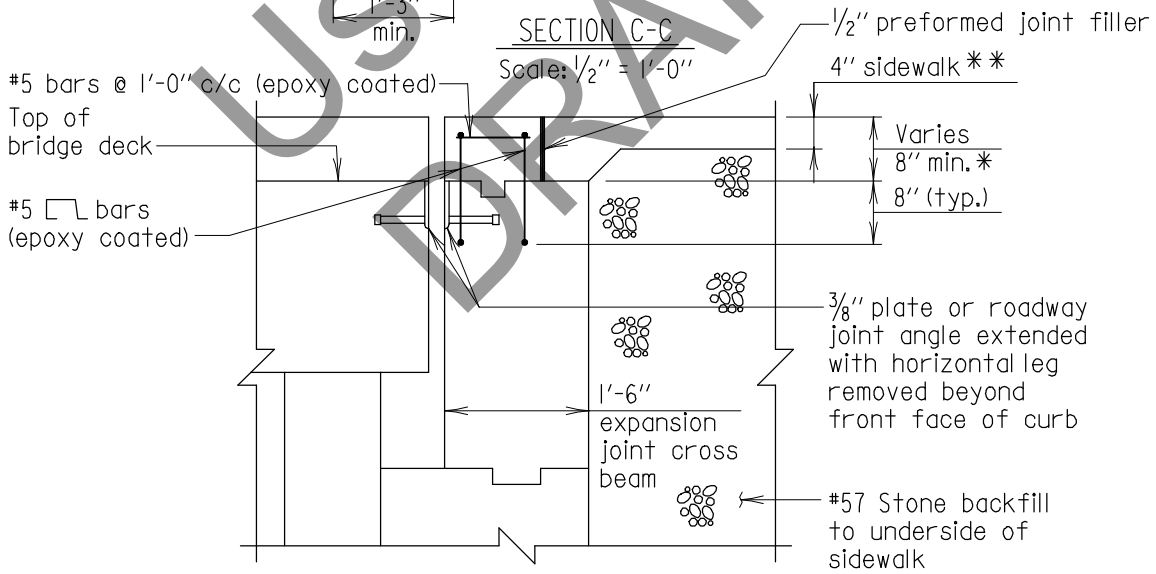

SECTION G-G
SIDEWALK TREATMENT AT ABUTMENT

Scale: 1/2"=1'-0"

Notes:
1. All longitudinal bars are #5 spaced as shown.
2. Fencing or railing not shown.

STRAIGHT BACK

* USEABLE DRAFT *

APPROVAL	
_____ DIRECTOR OFFICE OF STRUCTURES	
DATE: 09/01/15	
REVISIONS	
SHA	FHWA
FHWA APPROVAL	
DATE:	

STATE OF MARYLAND
DEPARTMENT OF TRANSPORTATION
STATE HIGHWAY ADMINISTRATION
OFFICE OF STRUCTURES

PARAPET ENDPOST FOR ABUTMENTS WITH EXPANSION JOINT CROSS BEAM AND SIDEWALK

NO. SUB-EP(SW)-101 SHEET 4 OF 5

SUBSTRUCTURE - END POST

Useable DRAFT

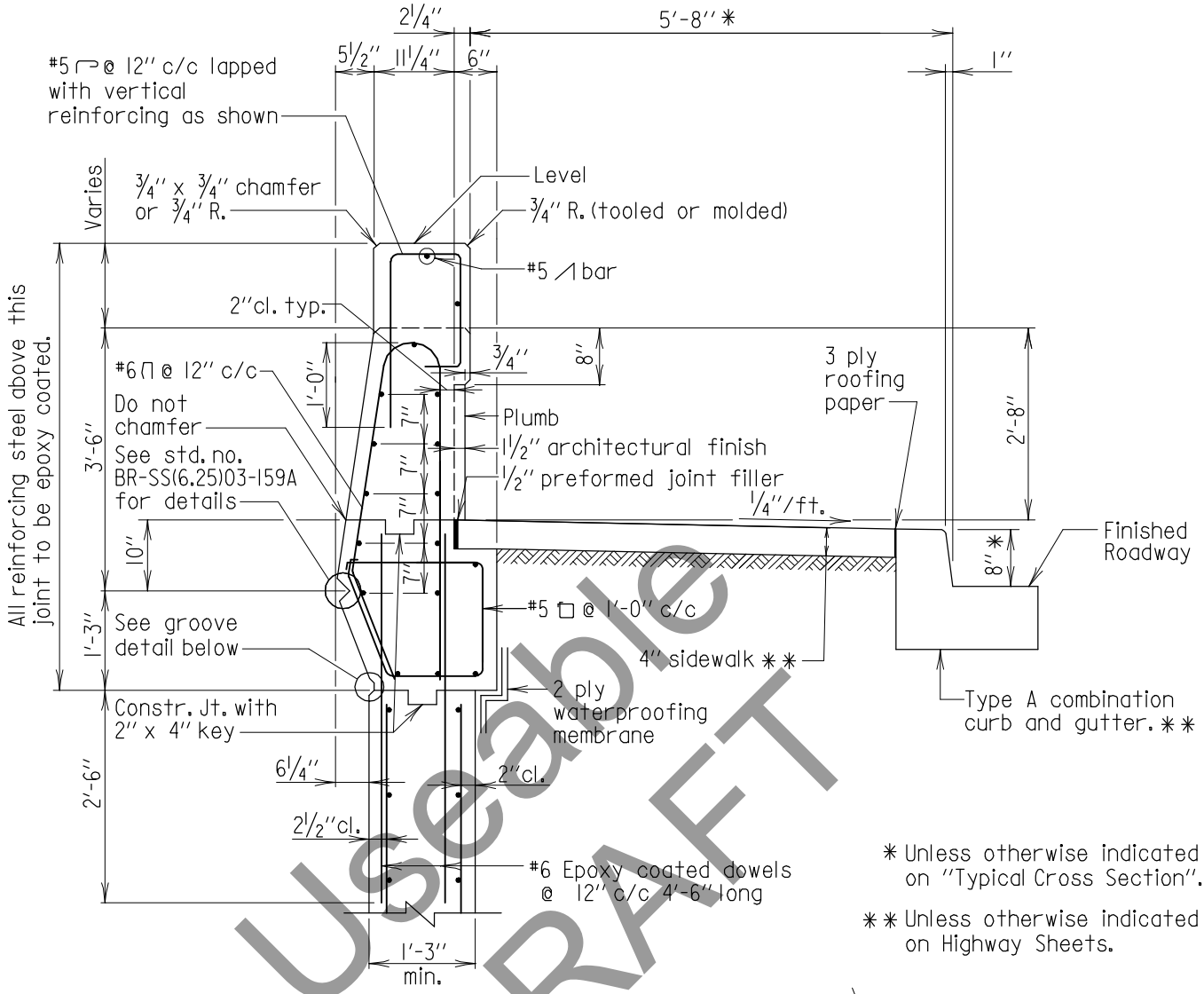

SECTION D-D

Scale: 1/2" = 1'-0"

* Unless otherwise indicated on "Typical Cross Section".

** Unless otherwise indicated on Highway Sheets.

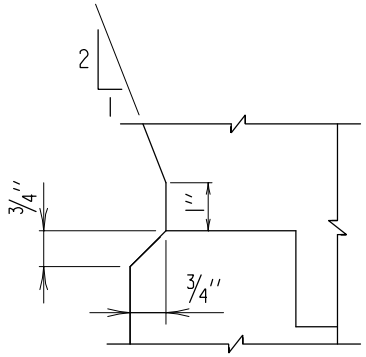

GROOVE DETAIL

Scale: 3"=1'-0"

Note:
All longitudinal bars are #5 spaced as shown.

DIAMOND BACK

* USEABLE DRAFT *

APPROVAL	
_____ DIRECTOR OFFICE OF STRUCTURES DATE: 09/01/15	
REVISIONS	
SHA	FHWA
FHWA APPROVAL	
DATE:	

STATE OF MARYLAND
DEPARTMENT OF TRANSPORTATION
STATE HIGHWAY ADMINISTRATION
OFFICE OF STRUCTURES

PARAPET ENDPOST FOR ABUTMENTS WITH EXPANSION JOINT CROSS BEAM AND SIDEWALK

NO. SUB-EP(SW)-101 SHEET 5 OF 5

SUBSTRUCTURE - END POST

Useable DRAFT

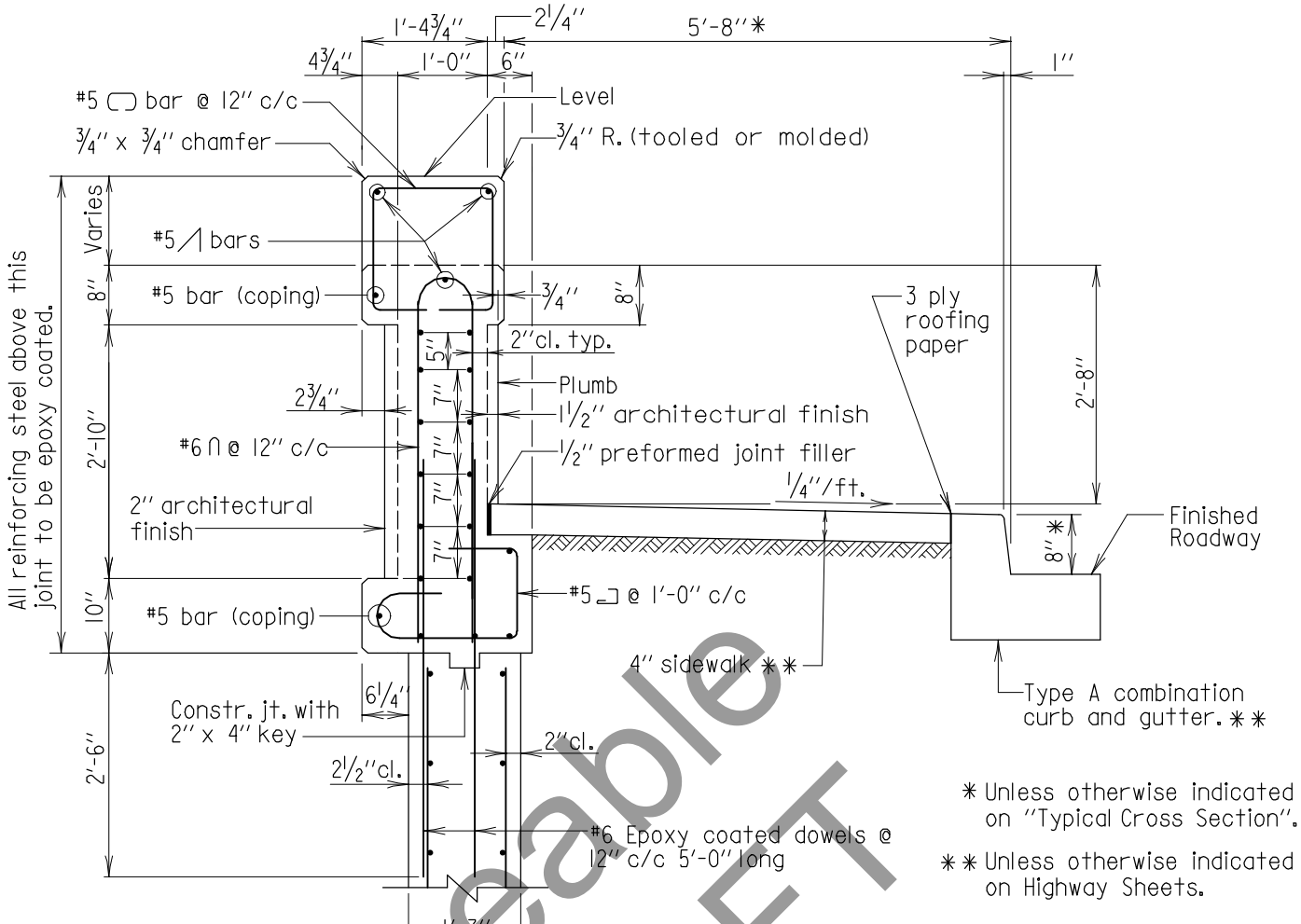

SECTION D-D

Scale: 1/2" = 1'-0"

* Unless otherwise indicated on "Typical Cross Section".

** Unless otherwise indicated on Highway Sheets.

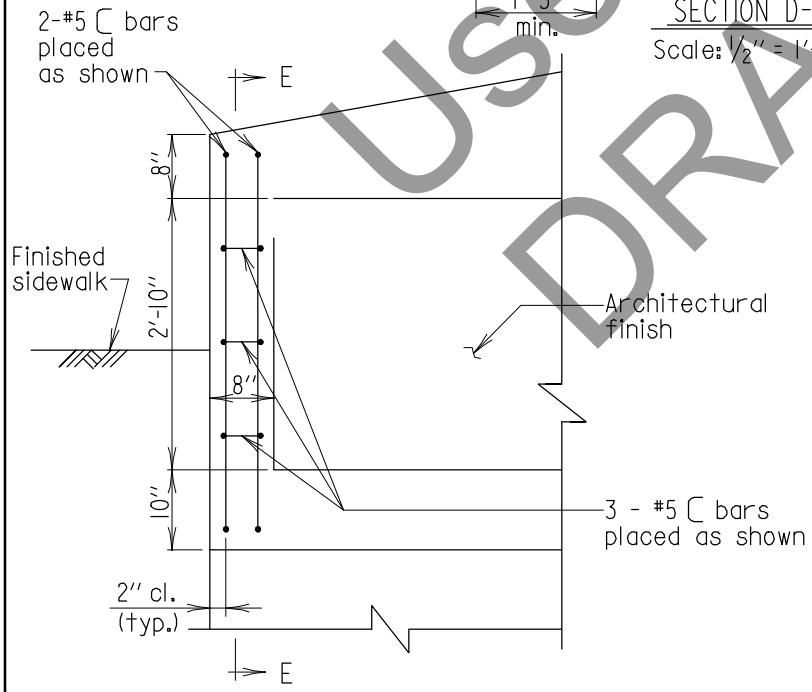

PARTIAL REAR ELEVATION

Scale: 1/2"=1'-0"

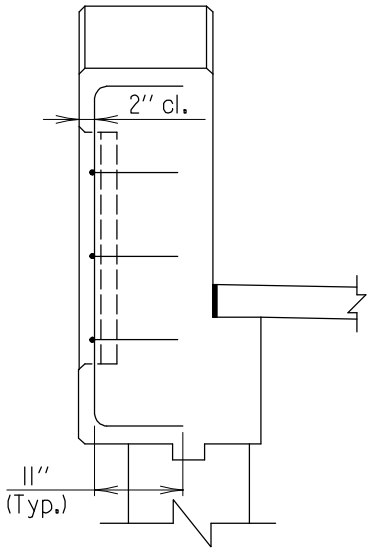

SECTION E-E

Scale: 1/2"=1'-0"

Note:
All longitudinal bars are #5 spaced as shown.

RECESSED BACK

* USEABLE DRAFT *

APPROVAL	
_____ DIRECTOR OFFICE OF STRUCTURES	
DATE: 09/01/15	
REVISIONS	
SHA	FHWA
FHWA APPROVAL	
DATE:	

STATE OF MARYLAND
DEPARTMENT OF TRANSPORTATION
STATE HIGHWAY ADMINISTRATION
OFFICE OF STRUCTURES

PARAPET ENDPOST FOR ABUTMENTS WITH EXPANSION JOINT CROSS BEAM AND SIDEWALK

NO. SUB-EP(SW)-101 SHEET 5 OF 5

SUBSTRUCTURE - END POST

Useable DRAFT

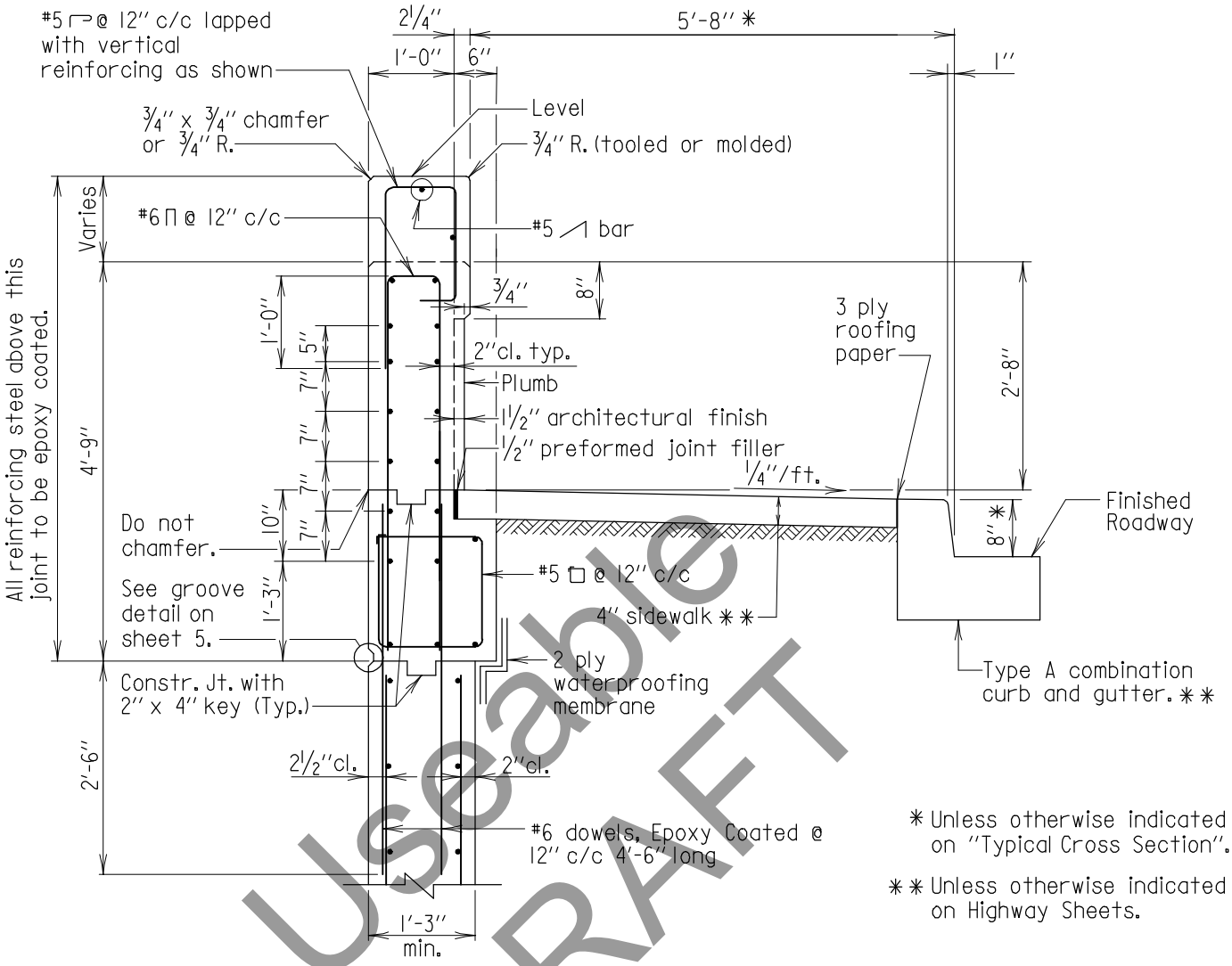

✱ Unless otherwise indicated on "Typical Cross Section".

✱✱ Unless otherwise indicated on Highway Sheets.

SECTION D-D

Scale: 1/2" = 1'-0"

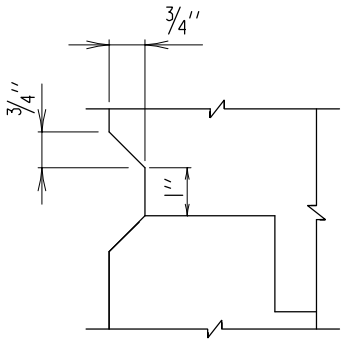

GROOVE DETAIL

Scale: 3"=1'-0"

Note:
All longitudinal bars are #5 spaced as shown.

STRAIGHT BACK

* USEABLE DRAFT *

APPROVAL
_____ DIRECTOR OFFICE OF STRUCTURES
DATE: 09/01/15

REVISIONS	
SHA	FHWA

FHWA APPROVAL	
DATE:	

STATE OF MARYLAND
DEPARTMENT OF TRANSPORTATION
STATE HIGHWAY ADMINISTRATION
OFFICE OF STRUCTURES

PARAPET ENDPOST FOR ABUTMENTS WITH EXPANSION JOINT CROSS BEAM AND SIDEWALK

NO. SUB-EP(SW)-101

SHEET 5 OF 5

SUBSTRUCTURE - END POST

Useable DRAFT

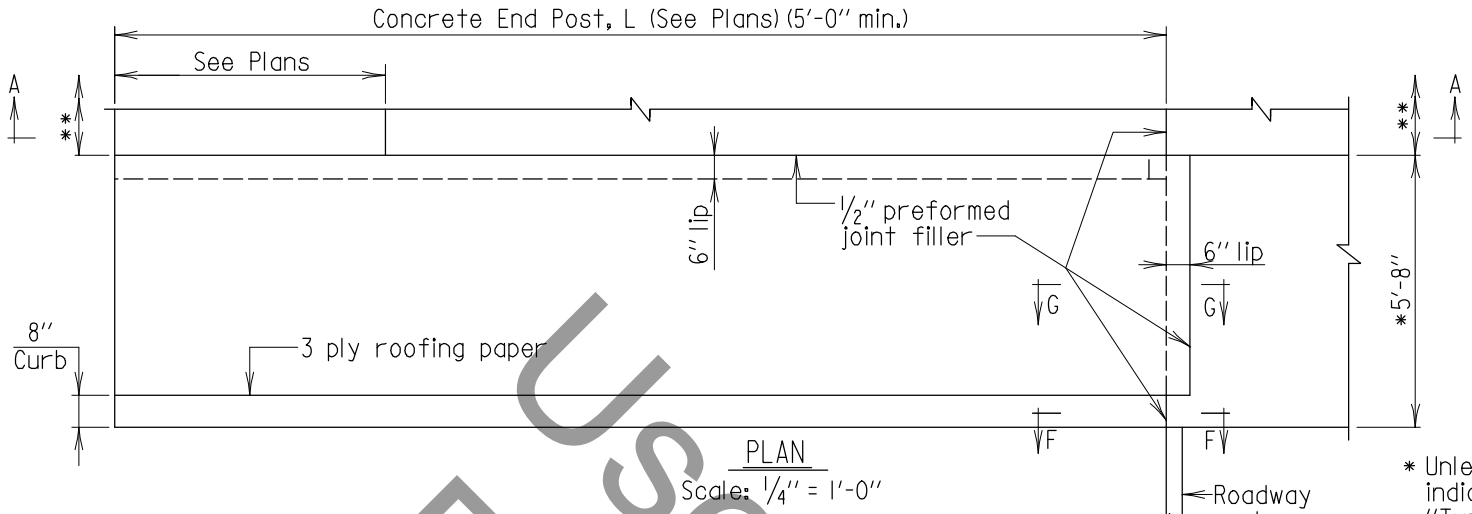

PLAN
Scale: 1/4" = 1'-0"

* Unless otherwise indicated on "Typical Cross Section"

** For overall parapet dimensions, see sheets 3, 4 and 5.

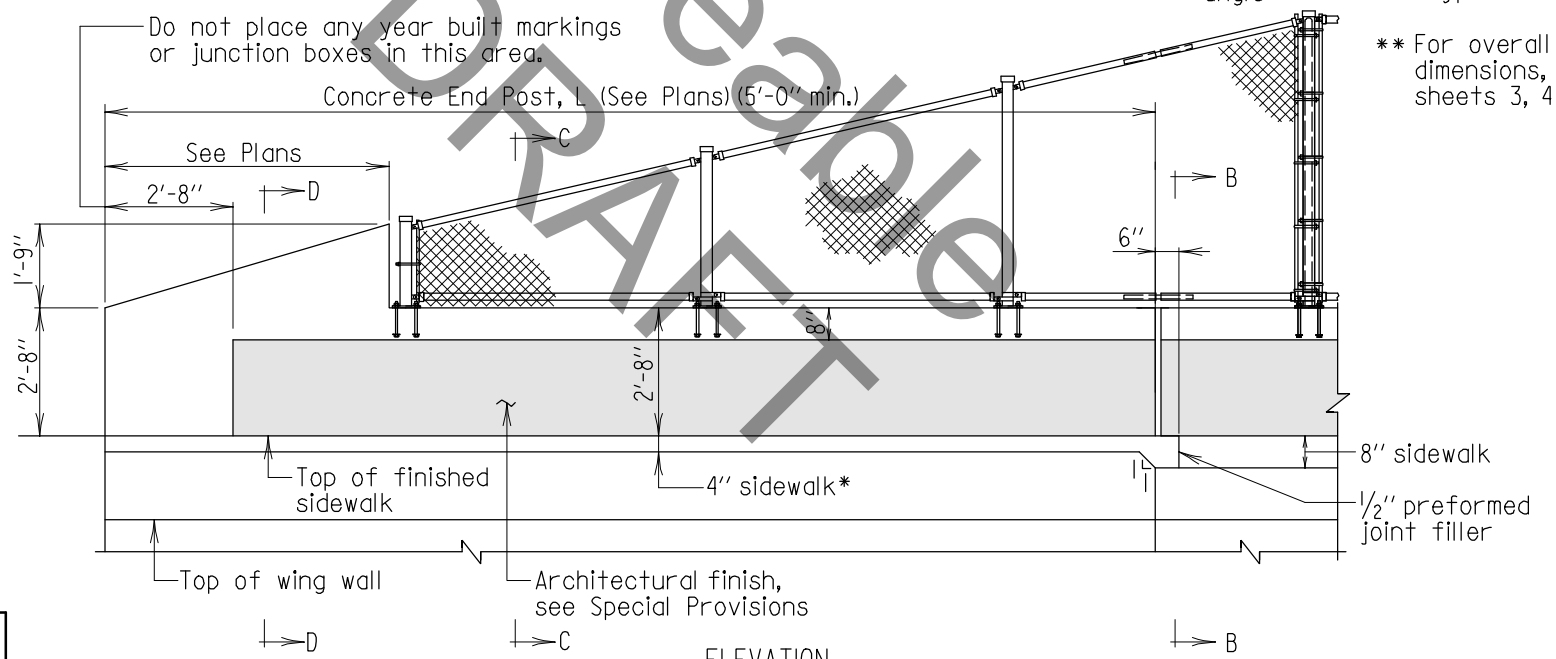

ELEVATION
Scale: 1/4" = 1'-0"

Notes:
1. Use on approach and trail end of bridges with sidewalks.
2. Type I Fence shown, see plans for fence or railing layout and details.
3. Thrie Beam Attachment not shown.

Note to Designer:
This standard contains details for straight back, diamond back and recessed back parapets. Include the appropriate shape in the Contract Plans.

Useable DRAFT

FHWA APPROVAL
DATE:

APPROVAL
DIRECTOR
OFFICE OF STRUCTURES
DATE: 09/01/15

REVISIONS
SHA
FHWA

STATE OF MARYLAND
DEPARTMENT OF TRANSPORTATION
STATE HIGHWAY ADMINISTRATION
OFFICE OF STRUCTURES

PARAPET ENDPOST FOR ABUTMENTS WITH FIXED JOINT AND SIDEWALK

NO. SUB-EP(SW)-201

SHEET 1 OF 5

* USEABLE DRAFT *

SUBSTRUCTURE - END POST

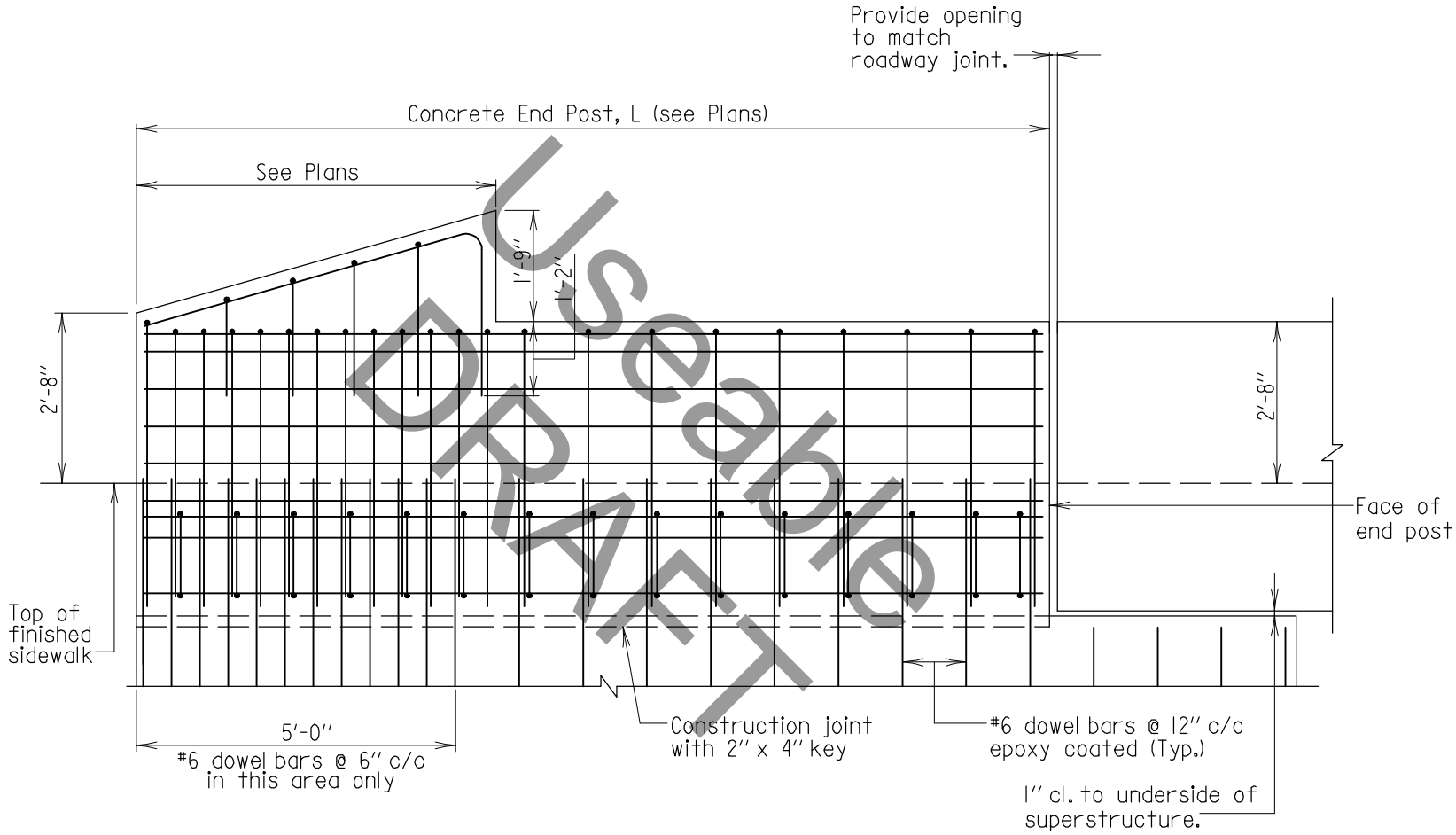

SECTION A-A

Scale: 3/8"=1'-0"

Notes:
1. For parapet reinforcing details, see sheets 3, 4 and 5.
2. If applicable, reinforcing for coping not shown.
3. Fencing or railing not shown.

Note to Designer:
This standard contains details for straight back, diamond back and recessed back parapets. Include the appropriate shape in the Contract Plans.

Useable DRAFT

* USEABLE DRAFT *

STATE OF MARYLAND
DEPARTMENT OF TRANSPORTATION
STATE HIGHWAY ADMINISTRATION
OFFICE OF STRUCTURES

PARAPET ENDPOST FOR ABUTMENTS WITH FIXED JOINT AND SIDEWALK

NO. SUB-EP(SW)-201

SHEET 2 OF 5

APPROVAL
DIRECTOR
OFFICE OF STRUCTURES
DATE: 09/01/15

REVISIONS
SHA
FHWA

FHWA APPROVAL
DATE:

SUBSTRUCTURE - END POST

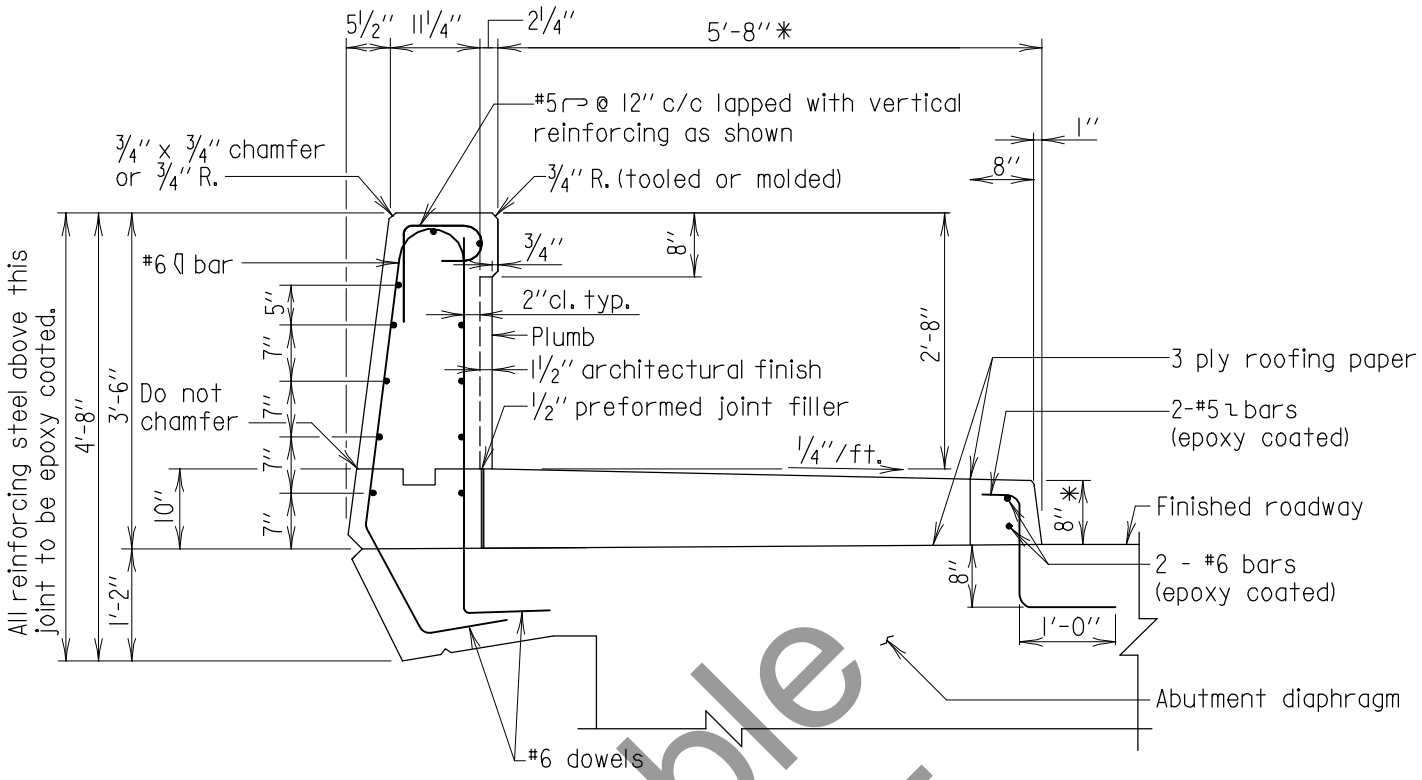

SECTION B-B

Scale: ½" = 1'-0"

* Unless otherwise indicated on "Typical Cross Section".

** Unless otherwise indicated on highway sheets.

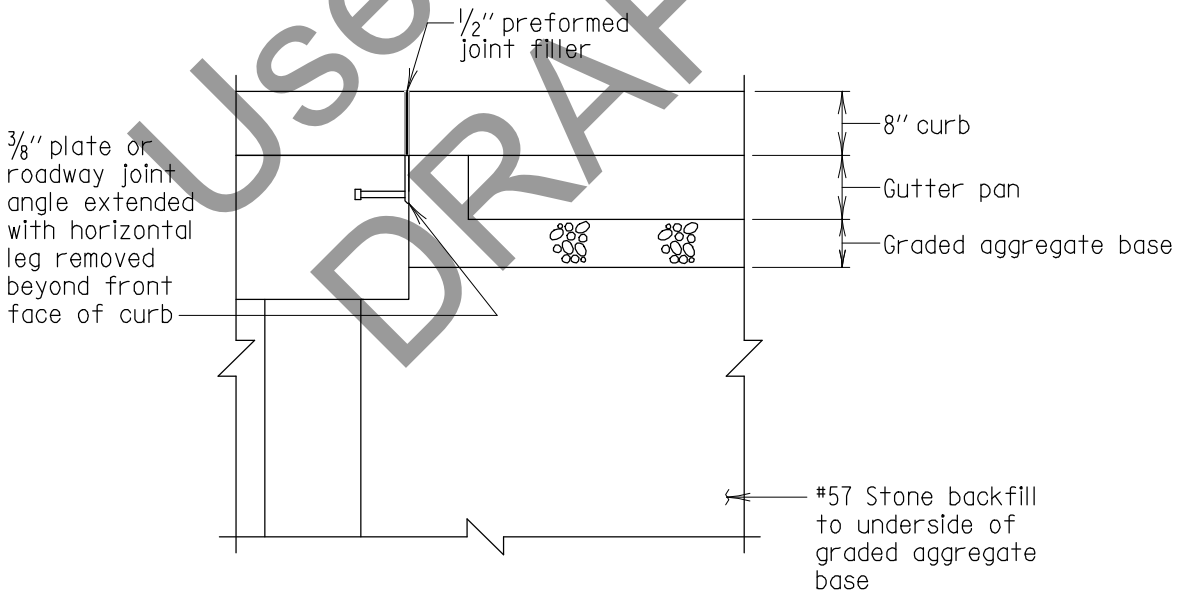

SECTION F-F
CURB TREATMENT AT ABUTMENT

Scale: ½"=1'-0"

Useable DRAFT

Notes:

1. All longitudinal bars are #5 spaced as shown.
2. Fencing or railing not shown.
3. Abutment Backwall dimensions and reinforcing not shown.

DIAMOND BACK

* USEABLE DRAFT *

APPROVAL	
_____ DIRECTOR OFFICE OF STRUCTURES DATE: 09/01/15	
REVISIONS	
SHA	FHWA
FHWA APPROVAL	
DATE:	

STATE OF MARYLAND
DEPARTMENT OF TRANSPORTATION
STATE HIGHWAY ADMINISTRATION
OFFICE OF STRUCTURES

PARAPET ENDPOST FOR ABUTMENTS WITH FIXED JOINT AND SIDEWALK

NO. SUB-EP(SW)-201 SHEET 3 OF 5

SUBSTRUCTURE - END POST

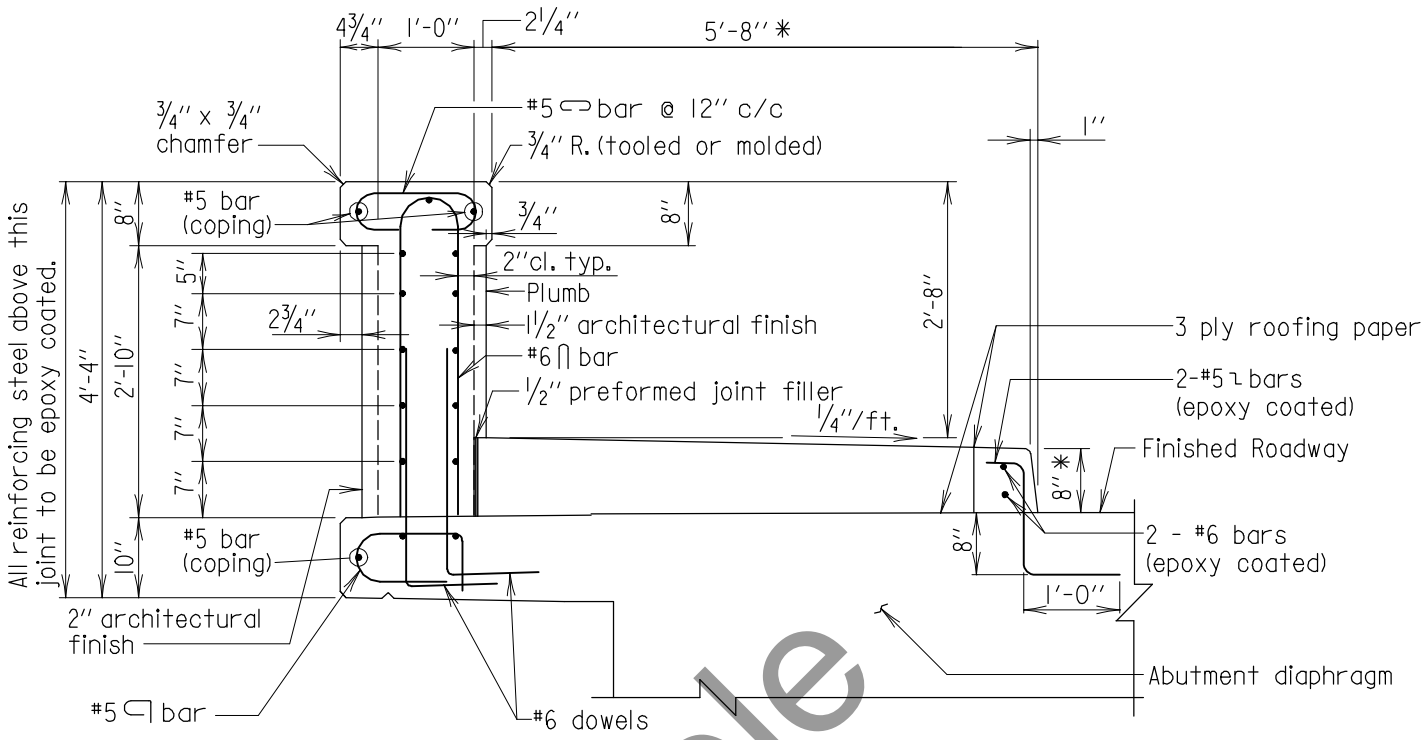

SECTION B-B

Scale: 1/2" = 1'-0"

* Unless otherwise indicated on "Typical Cross Section".

** Unless otherwise indicated on Highway Sheets.

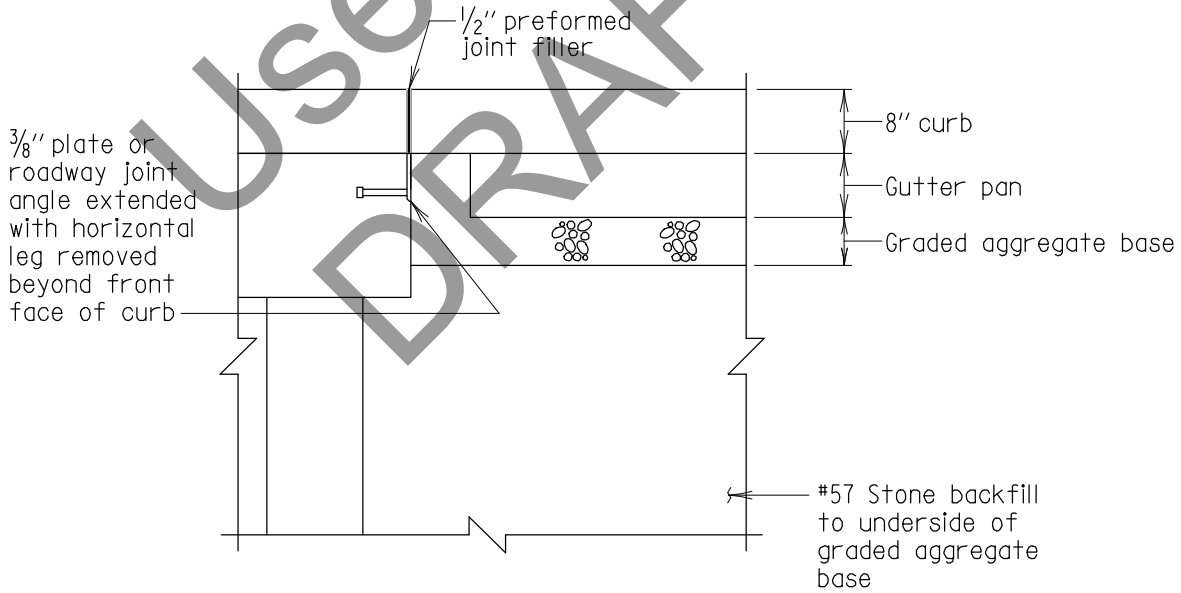

SECTION F-F
CURB TREATMENT AT ABUTMENT

Scale: 1/2"=1'-0"

Useable DRAFT

Notes:

1. All longitudinal bars are #5 spaced as shown.
2. Fencing or railing not shown.
3. Abutment Backwall dimensions and reinforcing not shown.

RECESSED BACK

* USEABLE DRAFT *

APPROVAL	
_____ DIRECTOR OFFICE OF STRUCTURES	
DATE: 09/01/15	
REVISIONS	
SHA	FHWA
FHWA APPROVAL	
DATE:	

STATE OF MARYLAND
DEPARTMENT OF TRANSPORTATION
STATE HIGHWAY ADMINISTRATION
OFFICE OF STRUCTURES

PARAPET ENDPOST FOR ABUTMENTS WITH FIXED JOINT AND SIDEWALK

NO. SUB-EP(SW)-201 SHEET 3 OF 5

SUBSTRUCTURE - END POST

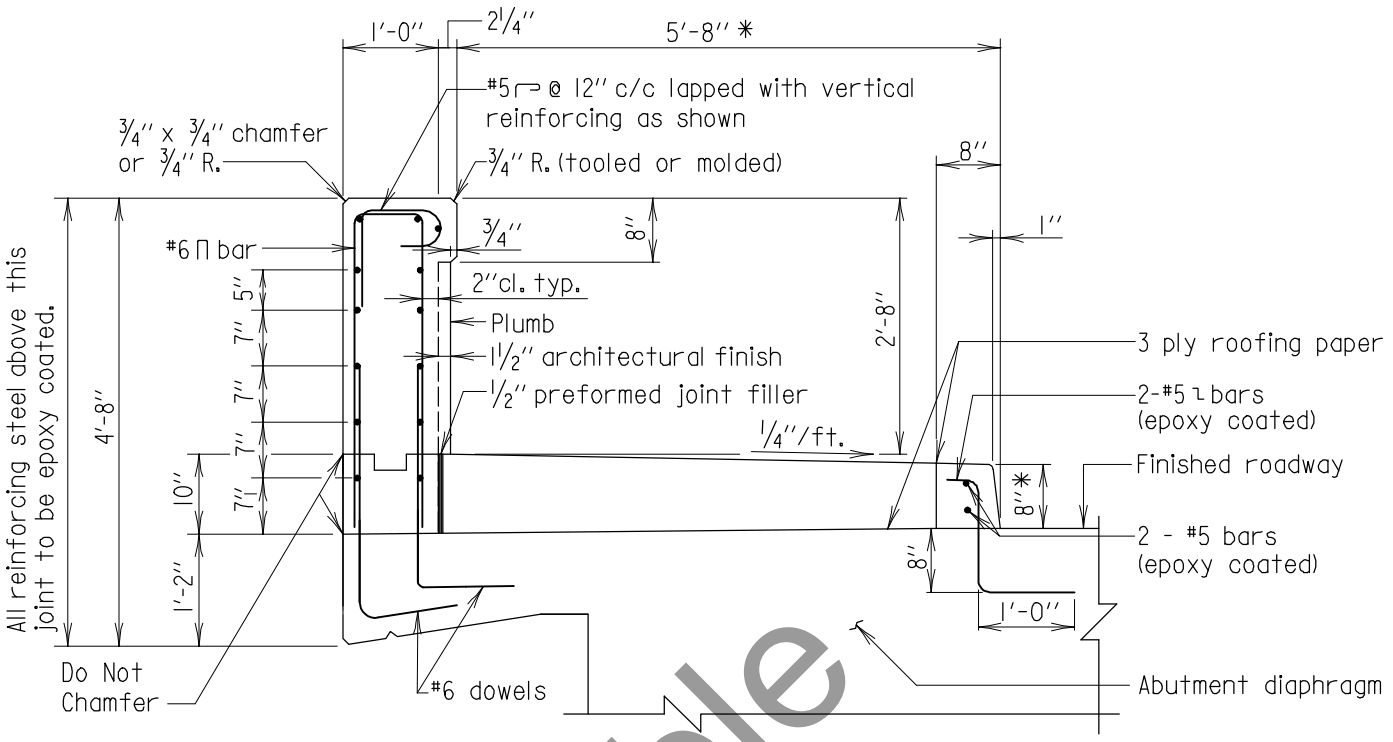

SECTION B-B

Scale: 1/2" = 1'-0"

* Unless otherwise indicated on "Typical Cross Section".

** Unless otherwise indicated on highway sheets.

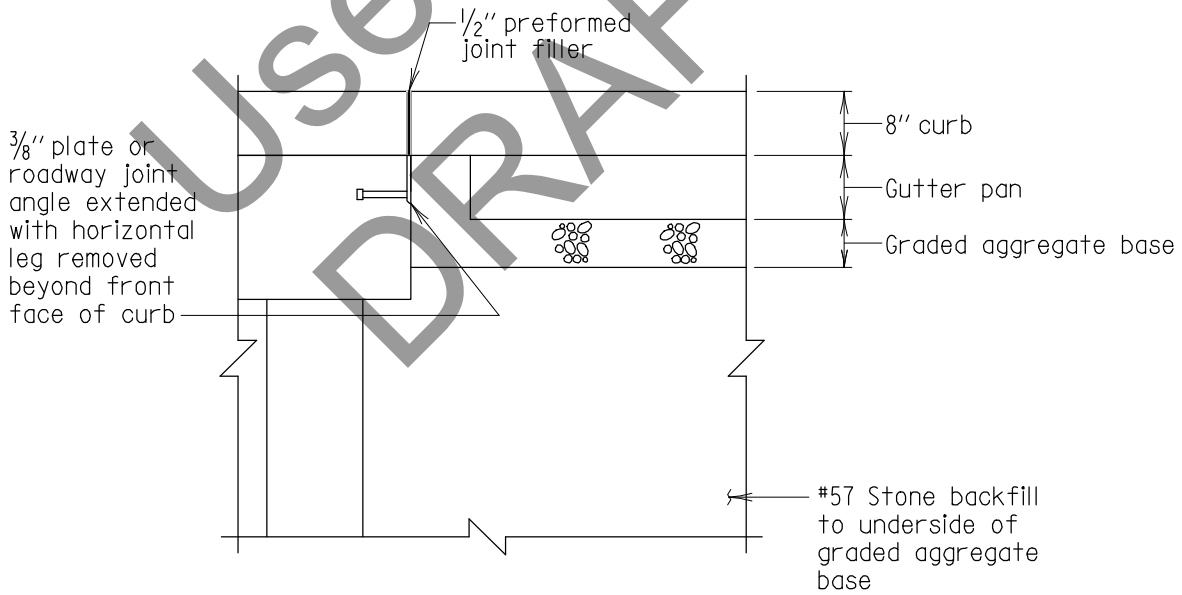

SECTION F-F
CURB TREATMENT AT ABUTMENT

Scale: 1/2"=1'-0"

Useable DRAFT

Notes:

1. All longitudinal bars are #5 spaced as shown.
2. Fencing or railing not shown.
3. Abutment Backwall dimensions and reinforcing not shown.

STRAIGHT BACK

* USEABLE DRAFT *

APPROVAL	
_____ DIRECTOR OFFICE OF STRUCTURES	
DATE: 09/01/15	
REVISIONS	
SHA	FHWA
FHWA APPROVAL	
DATE:	

STATE OF MARYLAND
DEPARTMENT OF TRANSPORTATION
STATE HIGHWAY ADMINISTRATION
OFFICE OF STRUCTURES

PARAPET ENDPOST FOR ABUTMENTS WITH FIXED JOINT AND SIDEWALK

NO. SUB-EP(SW)-201 SHEET 3 OF 5

SUBSTRUCTURE - END POST

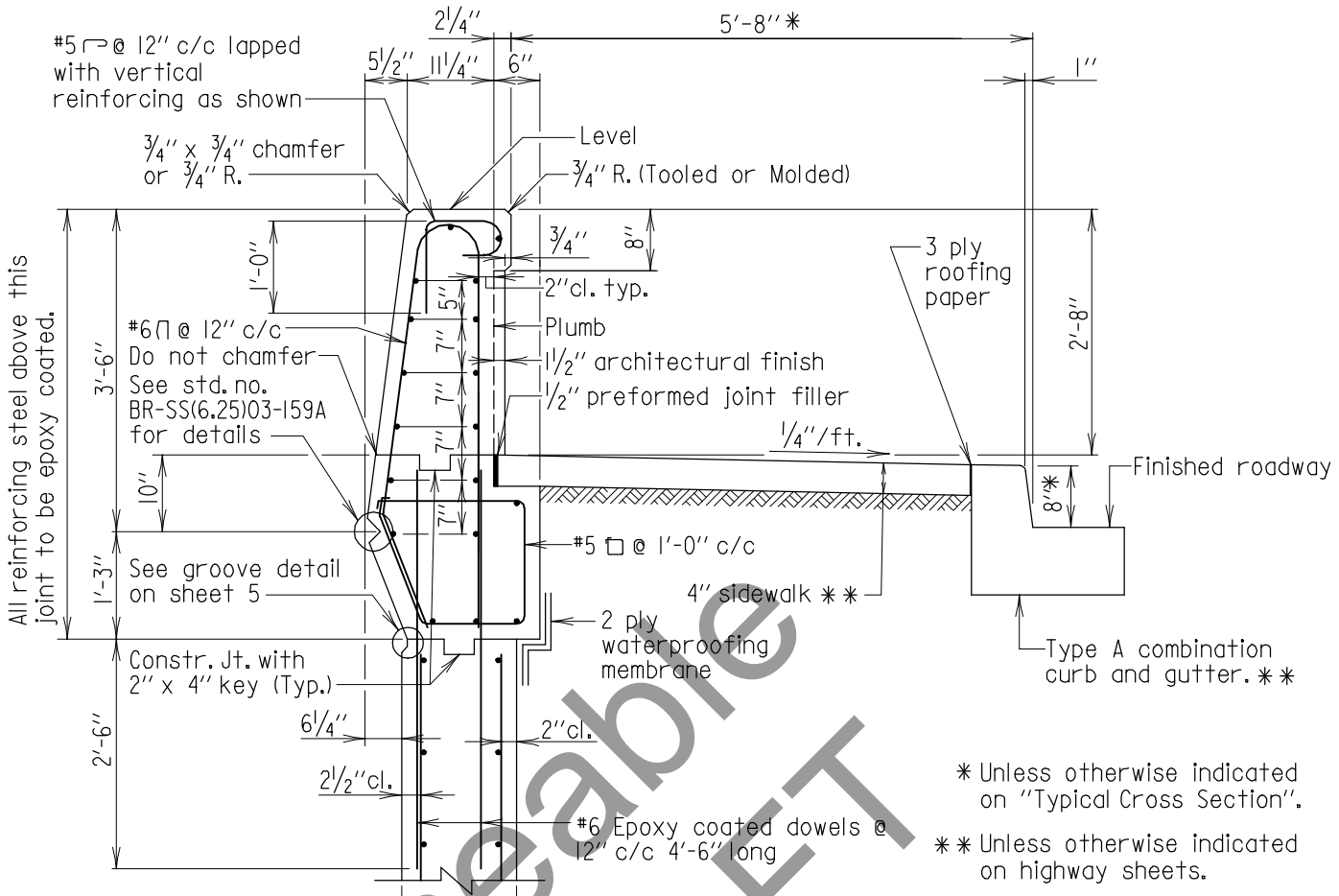

* Unless otherwise indicated on "Typical Cross Section".

** Unless otherwise indicated on highway sheets.

SECTION C-C

Scale: 1/2" = 1'-0"

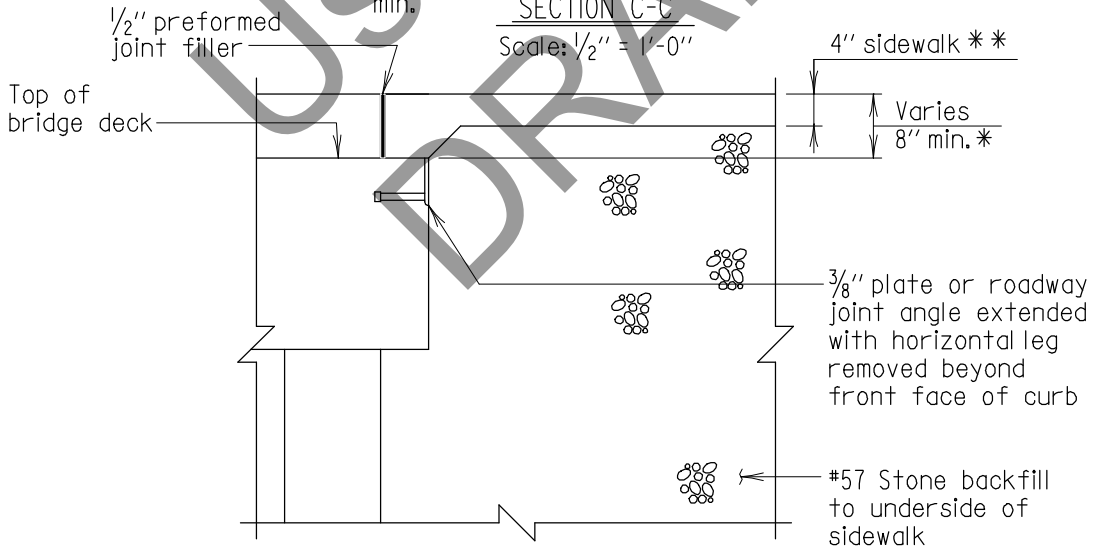

SECTION G-G
SIDEWALK TREATMENT AT ABUTMENT

Scale: 1/2"=1'-0"

Notes:
1. All longitudinal bars are #5 spaced as shown.
2. Fencing or railing not shown.

DIAMOND BACK

* USEABLE DRAFT *

APPROVAL	
_____ DIRECTOR OFFICE OF STRUCTURES	
DATE: 09/01/15	
REVISIONS	
SHA	FHWA
FHWA APPROVAL	
DATE:	

STATE OF MARYLAND
DEPARTMENT OF TRANSPORTATION
STATE HIGHWAY ADMINISTRATION
OFFICE OF STRUCTURES

PARAPET ENDPOST FOR ABUTMENTS WITH FIXED JOINT AND SIDEWALK

NO. SUB-EP(SW)-201 SHEET 4 OF 5

SUBSTRUCTURE - END POST

Useable DRAFT

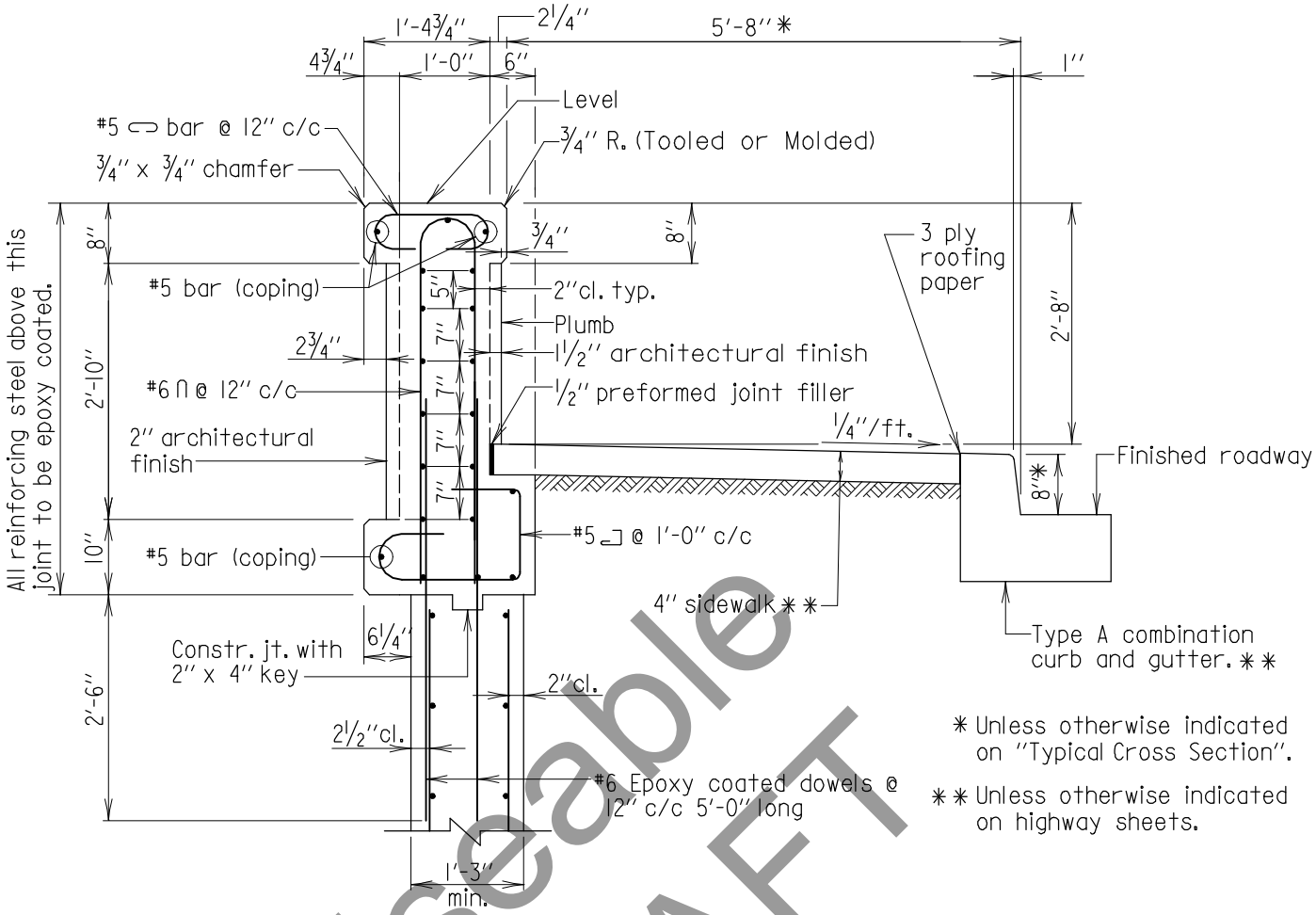

* Unless otherwise indicated on "Typical Cross Section".

** Unless otherwise indicated on highway sheets.

SECTION C-C

Scale: 1/2" = 1'-0"

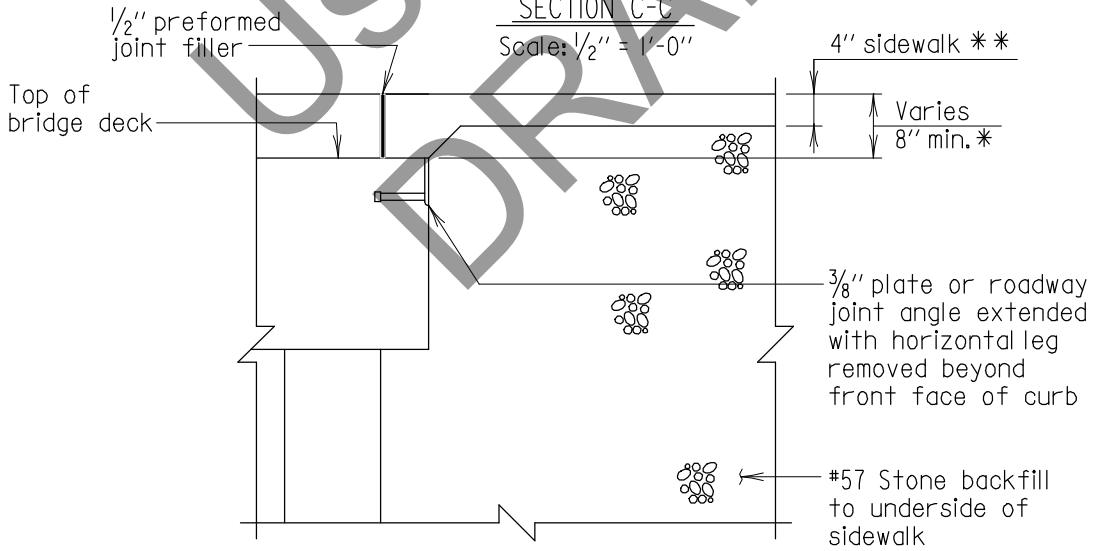

SECTION G-G
SIDEWALK TREATMENT AT ABUTMENT

Scale: 1/2"=1'-0"

RECESSED BACK

* USEABLE DRAFT *

Notes:
1. All longitudinal bars are #5 spaced as shown.
2. Fencing or railing not shown.

APPROVAL	
_____ DIRECTOR OFFICE OF STRUCTURES	
DATE: 09/01/15	
REVISIONS	
SHA	FHWA
FHWA APPROVAL	
DATE:	

STATE OF MARYLAND
DEPARTMENT OF TRANSPORTATION
STATE HIGHWAY ADMINISTRATION
OFFICE OF STRUCTURES

PARAPET ENDPOST FOR ABUTMENTS WITH FIXED JOINT AND SIDEWALK

NO. SUB-EP(SW)-201 SHEET 4 OF 5

SUBSTRUCTURE - END POST

Useable DRAFT

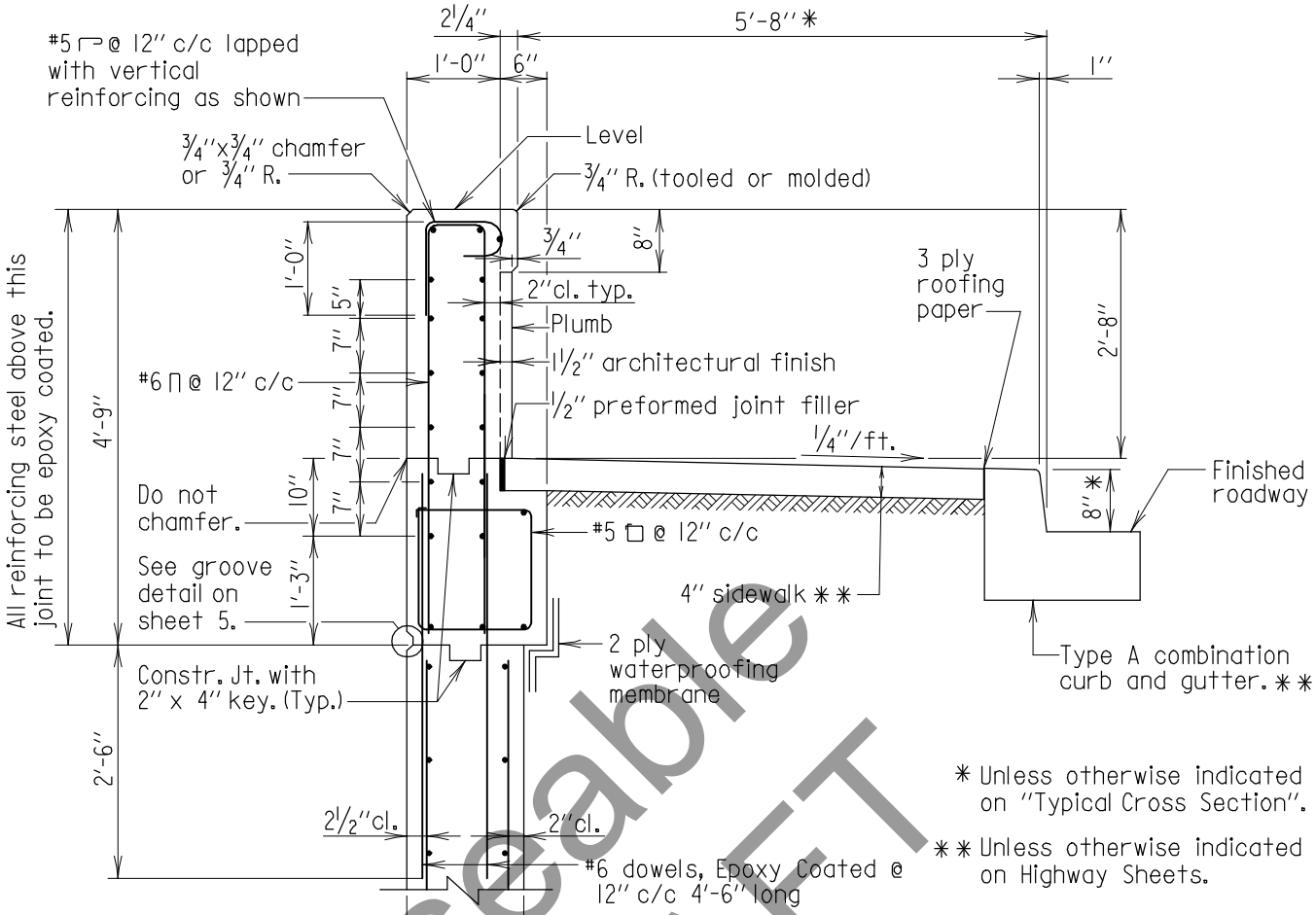

SECTION C-C

Scale: 1/2" = 1'-0"

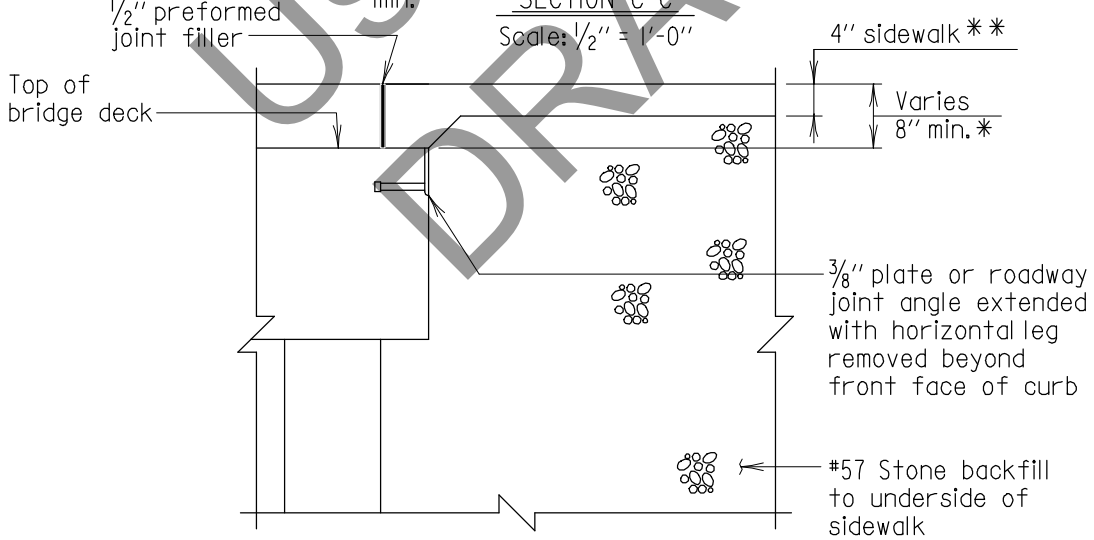

SECTION G-G
SIDEWALK TREATMENT AT ABUTMENT

Scale: 1/2"=1'-0"

Notes:
1. All longitudinal bars are #5 spaced as shown.
2. Fencing or railing not shown.

STRAIGHT BACK

* USEABLE DRAFT *

APPROVAL	
_____ DIRECTOR OFFICE OF STRUCTURES DATE: 09/01/15	
REVISIONS	
SHA	FHWA

FHWA APPROVAL
DATE:

STATE OF MARYLAND
DEPARTMENT OF TRANSPORTATION
STATE HIGHWAY ADMINISTRATION
OFFICE OF STRUCTURES

PARAPET ENDPOST FOR ABUTMENTS WITH FIXED JOINT AND SIDEWALK

NO. SUB-EP(SW)-201 SHEET 4 OF 5

SUBSTRUCTURE - END POST

Useable DRAFT

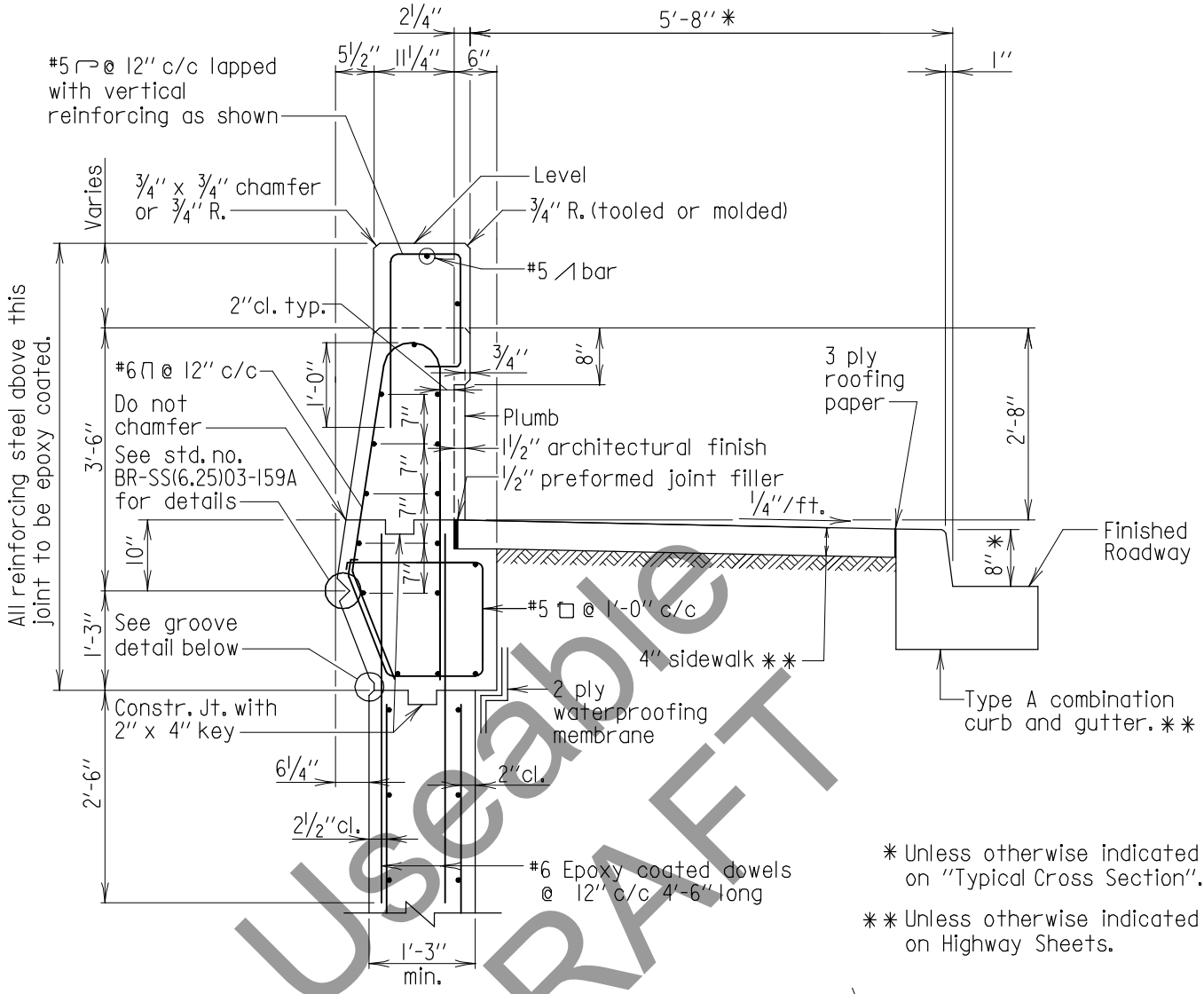

* Unless otherwise indicated on "Typical Cross Section".

** Unless otherwise indicated on Highway Sheets.

SECTION D-D

Scale: 1/2" = 1'-0"

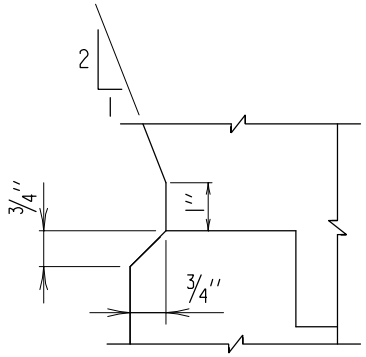

GROOVE DETAIL

Scale: 3"=1'-0"

Useable DRAFT

Note:
All longitudinal bars are #5 spaced as shown.

DIAMOND BACK

* USEABLE DRAFT *

APPROVAL	
_____ DIRECTOR OFFICE OF STRUCTURES DATE: 09/01/15	
REVISIONS	
SHA	FHWA
FHWA APPROVAL	
DATE:	

STATE OF MARYLAND
DEPARTMENT OF TRANSPORTATION
STATE HIGHWAY ADMINISTRATION
OFFICE OF STRUCTURES

PARAPET ENDPOST FOR ABUTMENTS WITH FIXED JOINT AND SIDEWALK

NO. SUB-EP(SW)-201 SHEET 5 OF 5

SUBSTRUCTURE - END POST

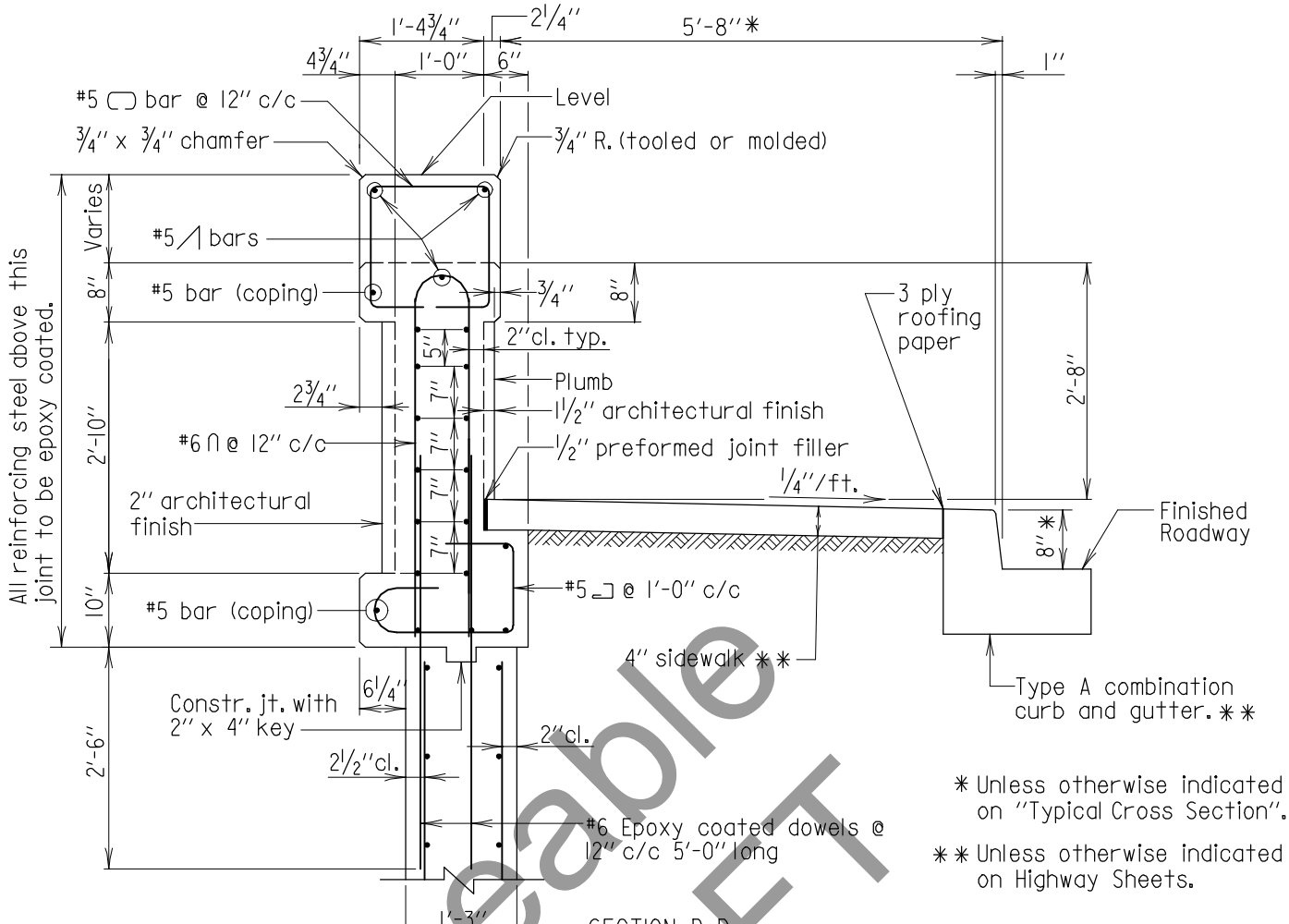

SECTION D-D

Scale: 1/2" = 1'-0"

* Unless otherwise indicated on "Typical Cross Section".

** Unless otherwise indicated on Highway Sheets.

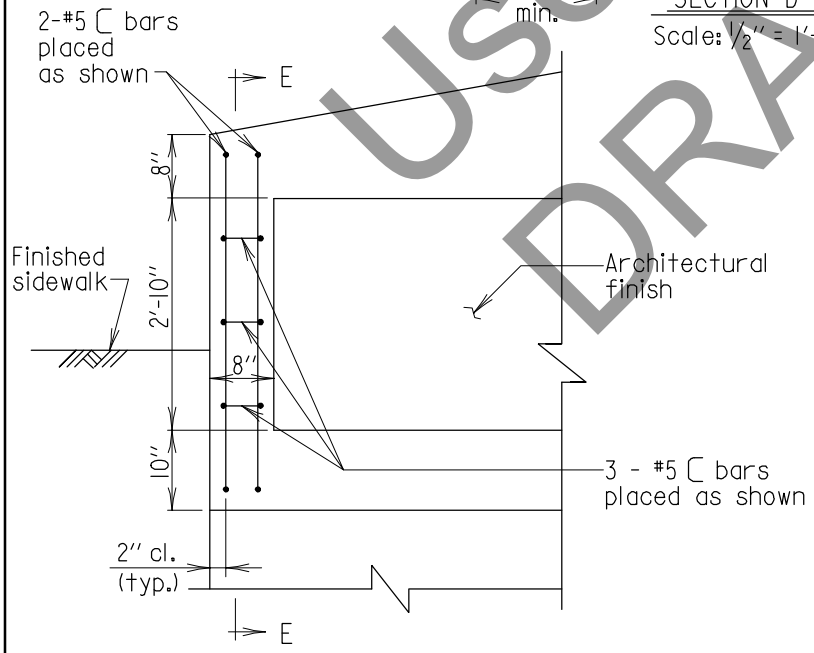

PARTIAL REAR ELEVATION

Scale: 1/2"=1'-0"

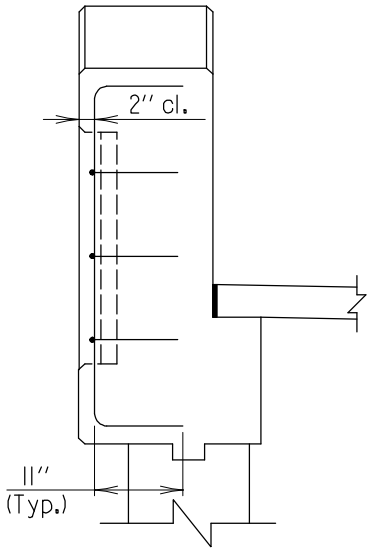

SECTION E-E

Scale: 1/2"=1'-0"

Useable DRAFT

RECESSED BACK

* USEABLE DRAFT *

Note:
All longitudinal bars are #5 spaced as shown.

APPROVAL	
_____ DIRECTOR OFFICE OF STRUCTURES DATE: 09/01/15	
REVISIONS	
SHA	FHWA
FHWA APPROVAL	
DATE:	

STATE OF MARYLAND
DEPARTMENT OF TRANSPORTATION
STATE HIGHWAY ADMINISTRATION
OFFICE OF STRUCTURES

PARAPET ENDPOST FOR ABUTMENTS WITH FIXED JOINT AND SIDEWALK

NO. SUB-EP(SW)-201 SHEET 5 OF 5

SUBSTRUCTURE -END POST

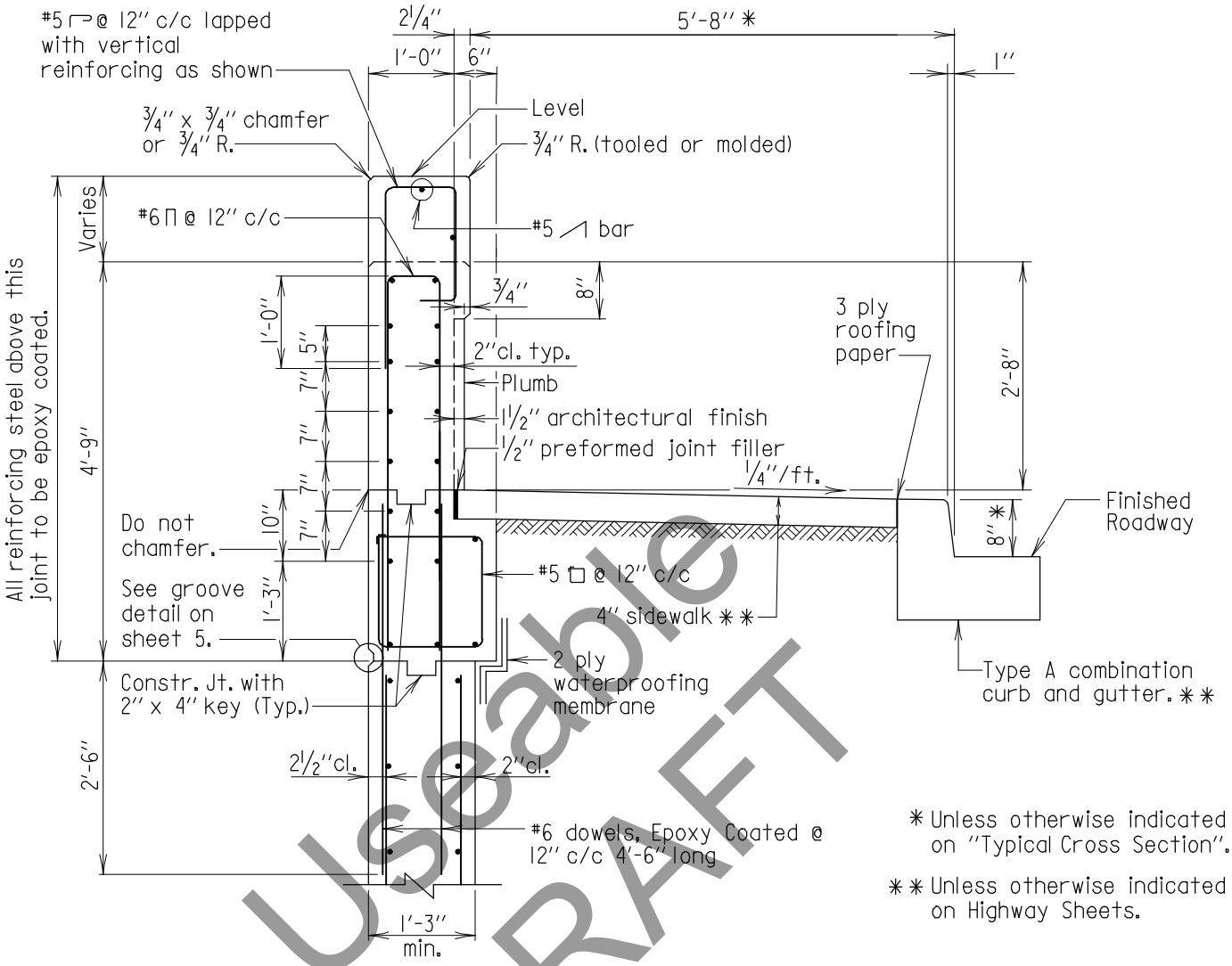

* Unless otherwise indicated on "Typical Cross Section".

** Unless otherwise indicated on Highway Sheets.

SECTION D-D

Scale: 1/2" = 1'-0"

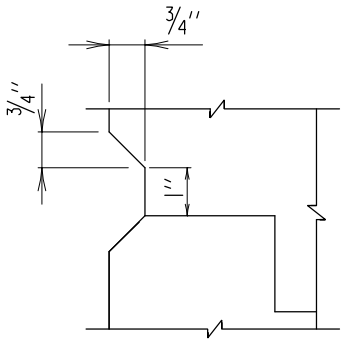

GROOVE DETAIL

Scale: 3"=1'-0"

Note:
All longitudinal bars are #5 spaced as shown.

STRAIGHT BACK

* USEABLE DRAFT *

APPROVAL	
_____ DIRECTOR OFFICE OF STRUCTURES	
DATE: 09/01/15	
REVISIONS	
SHA	FHWA
FHWA APPROVAL	
DATE:	

STATE OF MARYLAND
DEPARTMENT OF TRANSPORTATION
STATE HIGHWAY ADMINISTRATION
OFFICE OF STRUCTURES

PARAPET ENDPOST FOR ABUTMENTS WITH EXPANSION JOINT CROSS BEAM AND SIDEWALK

NO. SUB-EP(SW)-201 SHEET 5 OF 5

SUBSTRUCTURE - END POST

Useable DRAFT