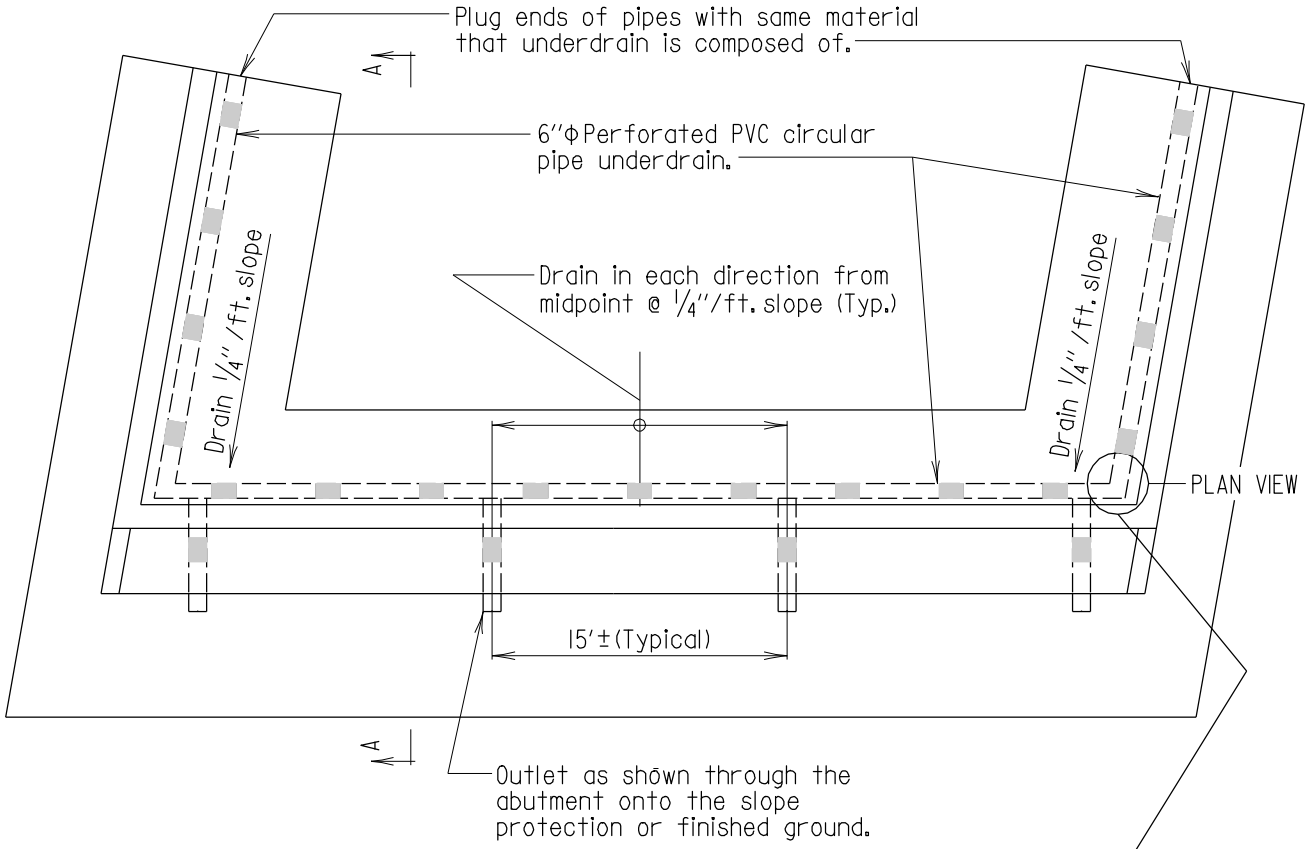

PLAN

Scale: None

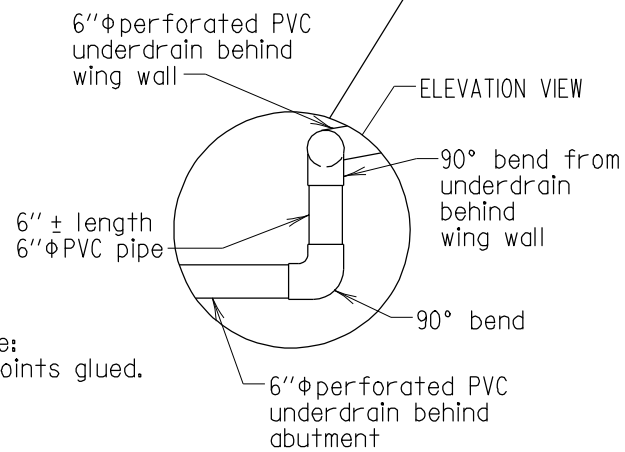

Note:
All joints glued.

Notes:

1. To be used for all abutments, regardless of the approach roadway grades.
2. Minimum slope of Pipe Underdrain Outlets is 1/4"/ft.
3. For Section A-A see Sheet No. 2, 3 or 4
4. The drainage system behind each wing wall can be connected to the drainage system behind the abutment using 2 - 90° bends and a short length of pipe. This will necessitate the drainage system behind the wing wall be slightly higher.
5. For wing walls over 15 ft. long, the drainage system behind them may be independent of the drainage system behind the abutment. They can be outletted directly through the wing wall.
6. The cost of the PVC underdrain complete in place will be incidental to the substructure concrete item.

APPROVAL	
E.S. Friedman DIRECTOR OFFICE OF BRIDGE DEVEL.	
DATE: 3/4/80	
REVISIONS	
SHA	FHWA
6-24-87	6-8-90
2-19-92	·
2-9-96	·
9-14-98	·

FHWA APPROVAL
DATE: 6-20-80

STATE OF MARYLAND
DEPARTMENT OF TRANSPORTATION
STATE HIGHWAY ADMINISTRATION
OFFICE OF BRIDGE DEVELOPMENT

DRAINAGE SYSTEM AND BACKFILL FOR ABUTMENTS

STANDARD NO. BR-SB(0.01)-80-101

SHEET 1 OF 5

SUBSTRUCTURE ABUT.

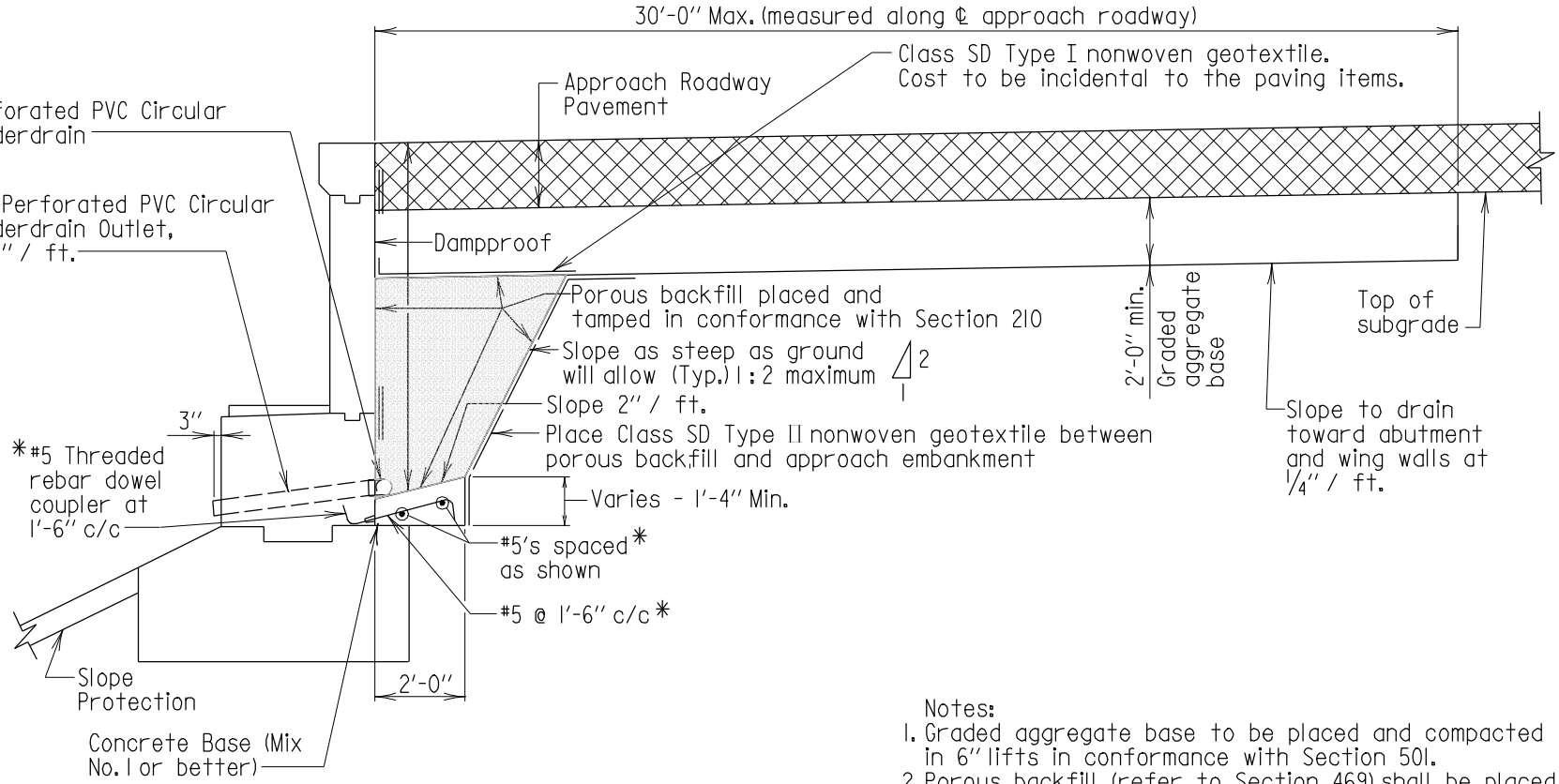

SECTION A-A

Scale: None

Notes:

1. Graded aggregate base to be placed and compacted in 6" lifts in conformance with Section 501.
2. Porous backfill (refer to Section 469) shall be placed as shown behind the abutment and to the same geometrics behind the abutment wing walls when they parallel the highway. (See sheet 5 of 5)
3. The Contractor must provide a well compacted surface to place the geotextile and stone fill against. In fill areas it will be necessary to overfill a sufficient distance so that a well compacted surface will be produced when the overfill is removed. The removed material will be incidental to the pertinent structure concrete item.
4. The cost of the stone graded aggregate base and geotextile will be incidental to the pertinent structure concrete item.

Other Related Standards
REBAR-BD(2.21)-93-285
REBAR-PL(4.00)-93-286

* If 1'-6" width of the concrete base is poured to rest on top of footing, the reinforcing can be eliminated. No additional compensation will be allowed for this option.

APPROVAL
DIRECTOR
OFFICE OF BRIDGE DEVEL.
DATE: 2/9/96

REVISIONS

SHA	12-14-98
FHWA	.
	7-30-99
	.
	1-22-01
	.
	10-9-07
	.

FHWA APPROVAL
DATE: .

STATE OF MARYLAND
DEPARTMENT OF TRANSPORTATION
STATE HIGHWAY ADMINISTRATION
OFFICE OF BRIDGE DEVELOPMENT

DRAINAGE SYSTEM AND BACKFILL FOR ABUTMENTS (PEDESTAL)

STANDARD NO. BR-SB(0.01)-80-101

SHEET 2 OF 5

SUBSTRUCTURE ABUT.

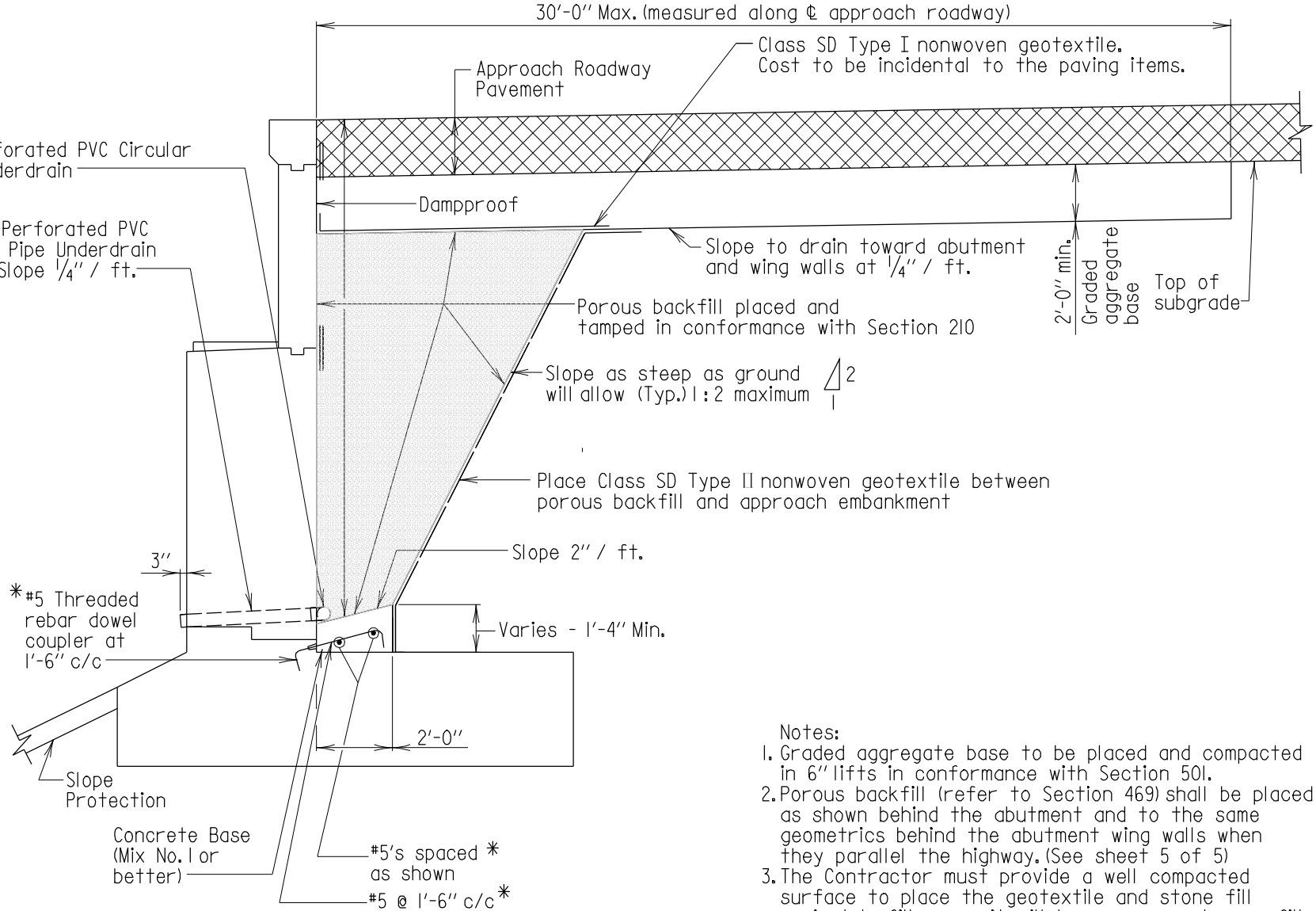

Other Related Standards
REBAR-BD(2.21)-93-285
REBAR-PL(4.00)-93-286

*If 1'-6" width of the concrete base is poured to rest on top of footing, the reinforcing can be eliminated. No additional compensation will be allowed for this option.

SECTION A-A
Scale: None

Notes:
1. Graded aggregate base to be placed and compacted in 6" lifts in conformance with Section 501.
2. Porous backfill (refer to Section 469) shall be placed as shown behind the abutment and to the same geometrics behind the abutment wing walls when they parallel the highway. (See sheet 5 of 5)
3. The Contractor must provide a well compacted surface to place the geotextile and stone fill against. In fill areas it will be necessary to overfill a sufficient distance so that a well compacted surface will be produced when the overfill is removed. The removed material will be incidental to the pertinent structure concrete item.
4. The cost of the stone graded aggregate base and geotextile will be incidental to the pertinent structure concrete item.

APPROVAL
E.S. Freeman DIRECTOR
OFFICE OF BRIDGE DEVEL.
DATE: 2/9/96

REVISIONS

SHA	12-14-98
FHWA	.
	7-30-99
	.
	1-22-01
	.
	10-9-07
	.

FHWA APPROVAL
DATE: .

STATE OF MARYLAND
DEPARTMENT OF TRANSPORTATION
STATE HIGHWAY ADMINISTRATION
OFFICE OF BRIDGE DEVELOPMENT

DRAINAGE SYSTEM AND BACKFILL
FOR ABUTMENTS (SEMI-CANTILEVER)

STANDARD NO. BR-SB(0.01)-80-101

SHEET 3 OF 5

SUBSTRUCTURE ABUT.

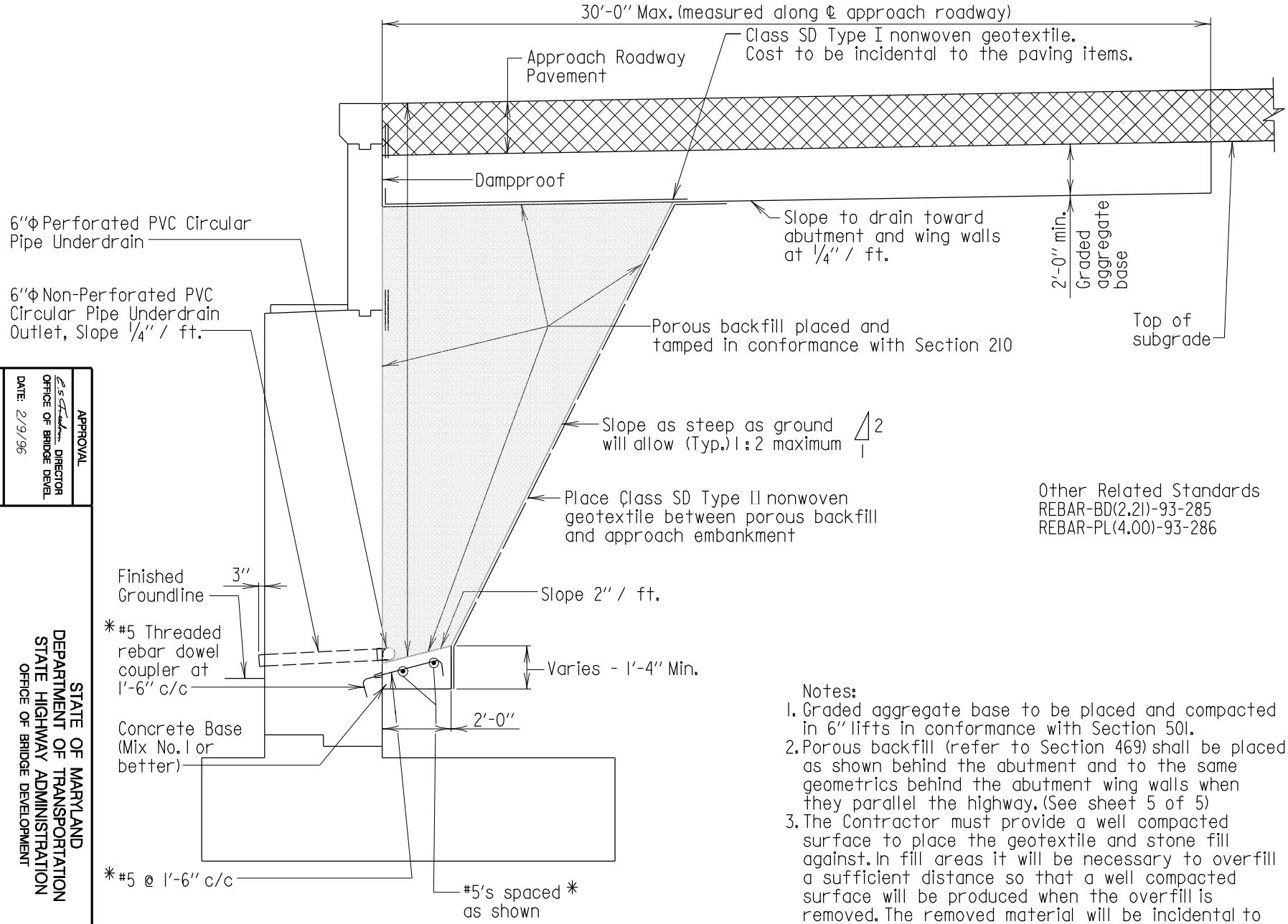

Other Related Standards
REBAR-BD(2.21)-93-285
REBAR-PL(4.00)-93-286

Notes:
1. Graded aggregate base to be placed and compacted in 6" lifts in conformance with Section 501.
2. Porous backfill (refer to Section 469) shall be placed as shown behind the abutment and to the same geometrics behind the abutment wing walls when they parallel the highway. (See sheet 5 of 5)
3. The Contractor must provide a well compacted surface to place the geotextile and stone fill against. In fill areas it will be necessary to overfill a sufficient distance so that a well compacted surface will be produced when the overfill is removed. The removed material will be incidental to the pertinent structure concrete item.
4. The cost of the stone graded aggregate base and geotextile will be incidental to the pertinent structure concrete item.

SECTION A-A
Scale: None

* If 1'-6" width of the concrete base is poured to rest on top of footing, the reinforcing can be eliminated. No additional compensation will be allowed for this option.

STATE OF MARYLAND
DEPARTMENT OF TRANSPORTATION
STATE HIGHWAY ADMINISTRATION
OFFICE OF BRIDGE DEVELOPMENT

DRAINAGE SYSTEM AND BACKFILL
FOR ABUTMENTS (FULL CANTILEVER)

APPROVAL
DIRECTOR OFFICE OF BRIDGE DEVEL.
DATE: 2/9/96

REVISIONS	
SHA	12-14-98
	7-30-99
	1-22-01
	10-9-07
FHWA	.
	.
	.
	.

FHWA APPROVAL
DATE: .

STANDARD NO. BR-SB(0.01)-80-101

SHEET 4 OF 5

SUBSTRUCTURE ABUT.

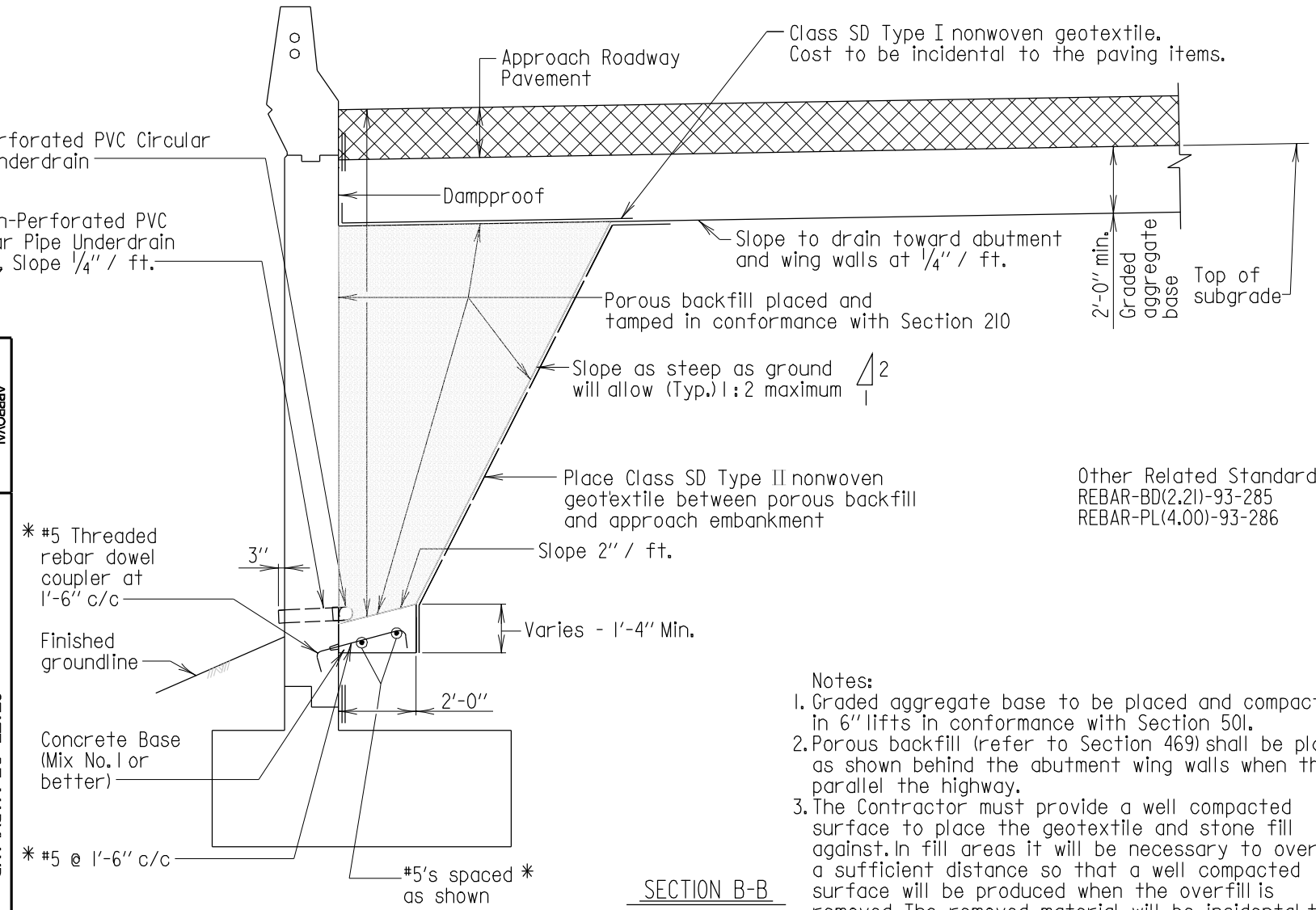

SECTION B-B
Scale: None

Other Related Standards
REBAR-BD(2.21)-93-285
REBAR-PL(4.00)-93-286

Notes:
1. Graded aggregate base to be placed and compacted in 6" lifts in conformance with Section 501.
2. Porous backfill (refer to Section 469) shall be placed as shown behind the abutment wing walls when they parallel the highway.
3. The Contractor must provide a well compacted surface to place the geotextile and stone fill against. In fill areas it will be necessary to overfill a sufficient distance so that a well compacted surface will be produced when the overfill is removed. The removed material will be incidental to the pertinent structure concrete item.
4. The cost of the stone graded aggregate base and geotextile will be incidental to the pertinent structure concrete item.
5. For bridges with wing walls that are not parallel to highway see std. no. RW(0.01)-80-100 for details.

* If 1'-6" width of the concrete base is poured to rest on top of footing, the reinforcing can be eliminated. No additional compensation will be allowed for this option.

STATE OF MARYLAND
DEPARTMENT OF TRANSPORTATION
STATE HIGHWAY ADMINISTRATION
OFFICE OF BRIDGE DEVELOPMENT

DRAINAGE SYSTEM AND BACKFILL
FOR WING WALLS THAT ARE PARALLEL TO THE HIGHWAY

APPROVAL
DIRECTOR OFFICE OF BRIDGE DEVEL.
DATE: 9/14/98

REVISIONS

SHA	7-30-99
FHWA	.
	1-22-01
	10-9-07

FHWA APPROVAL
DATE: .

STANDARD NO. BR-SB(0.01)-80-101

SHEET 5 OF 5

SUBSTRUCTURE ABUT.

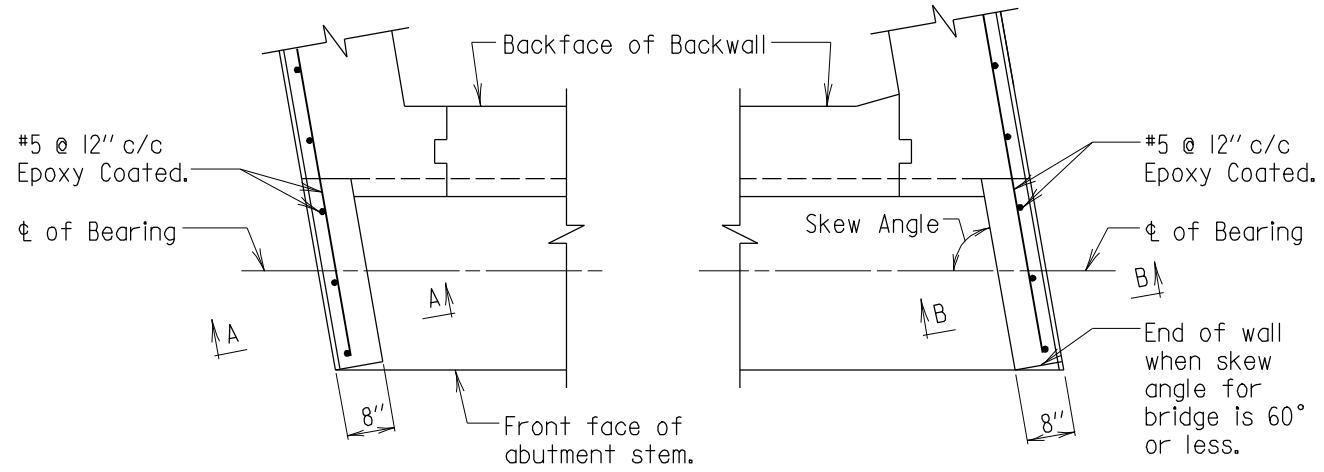

PLAN

Scale: 3/8" = 1'-0"

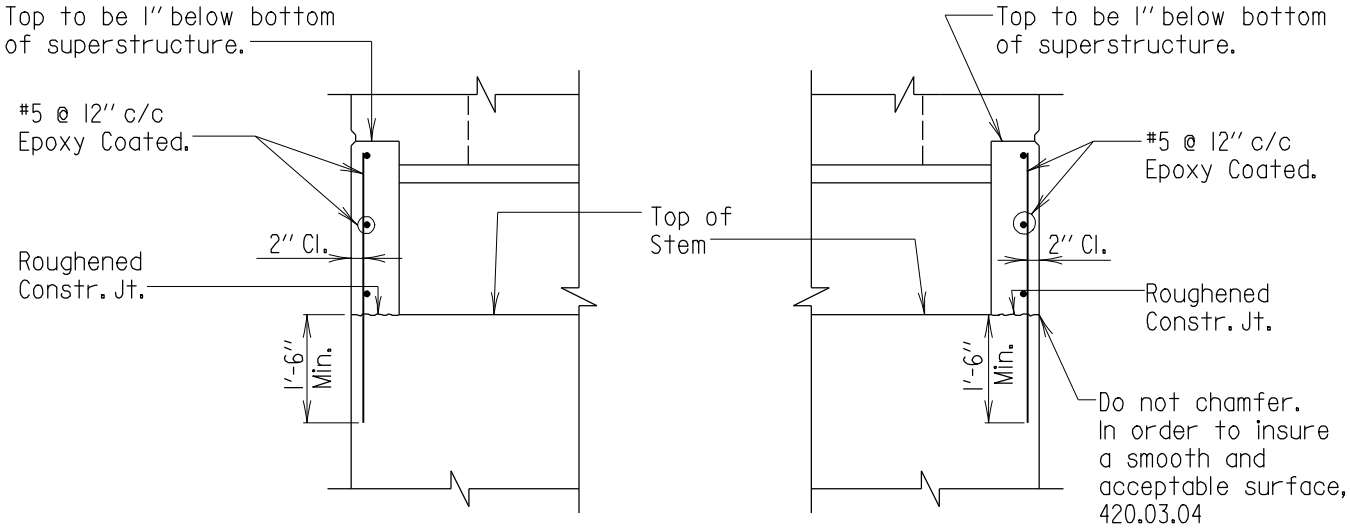

SECTION A-A

Scale: 3/8" = 1'-0"

SECTION B-B

Scale: 3/8" = 1'-0"

APPROVAL		
E.S. Freedman DIRECTOR OFFICE OF BRIDGE DEVEL. DATE: 11/13/85		
REVISIONS		
	SHA	FHWA
	11-30-87	6-8-90
	1-4-94	·
FHWA APPROVAL	8-4-98	·
DATE: 6-8-90	1-22-01	·

STATE OF MARYLAND
DEPARTMENT OF TRANSPORTATION
STATE HIGHWAY ADMINISTRATION
OFFICE OF BRIDGE DEVELOPMENT

CHEEK WALL AT
BRIDGE ABUTMENT

STANDARD NO. BR-SB(6.10)-85-176 SHEET 1 OF 1

SUBSTRUCTURE ABUT.

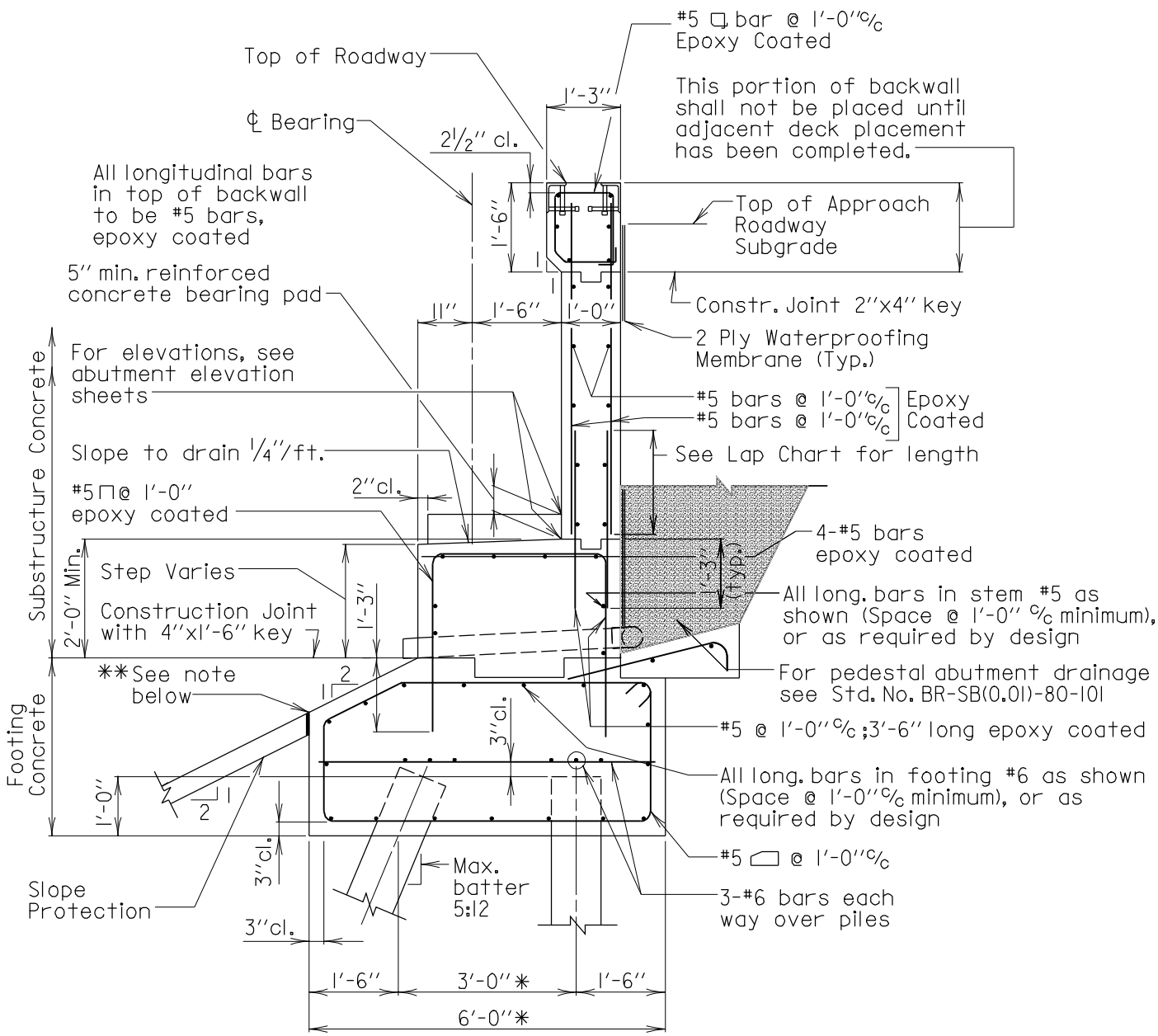

SECTION

Scale: 3/8" = 1'-0"

*Minimum dimensions shown, as required by design.

**If concrete slope protection is used, add one layer of tar paper full contact area where substructure unit is adjacent to slope protection. If open joint remains after slope protection has cured, then fill open joint with joint sealer conforming to Specifications.

Notes:

1. All dimensions, bar sizes, and bar spacings are minimum; if required by design, modify.
2. Contractor has option of lapping stem reinforcing and dowels as shown; or extending dowel reinforcement with no splicing. However, no additional compensation to Contractor will be allowed for whichever alternative is selected.

FOR OFFICE USE ONLY

APPROVAL	
E.S. Friedman DIRECTOR OFFICE OF BRIDGE DEVEL. DATE: 2/16/88	
REVISIONS	
SHA	FHWA
3-21-95	·
12-14-98	·
8-18-05	·
10-9-07	·
FHWA APPROVAL	
DATE:	

STATE OF MARYLAND
DEPARTMENT OF TRANSPORTATION
STATE HIGHWAY ADMINISTRATION
OFFICE OF BRIDGE DEVELOPMENT

TYPICAL SECTION
FOR PEDESTAL ABUTMENT ON PILES

STANDARD NO. BR-SB(6.17)-88-194 SHEET 1 OF 1

SUBSTRUCTURE ABUT.

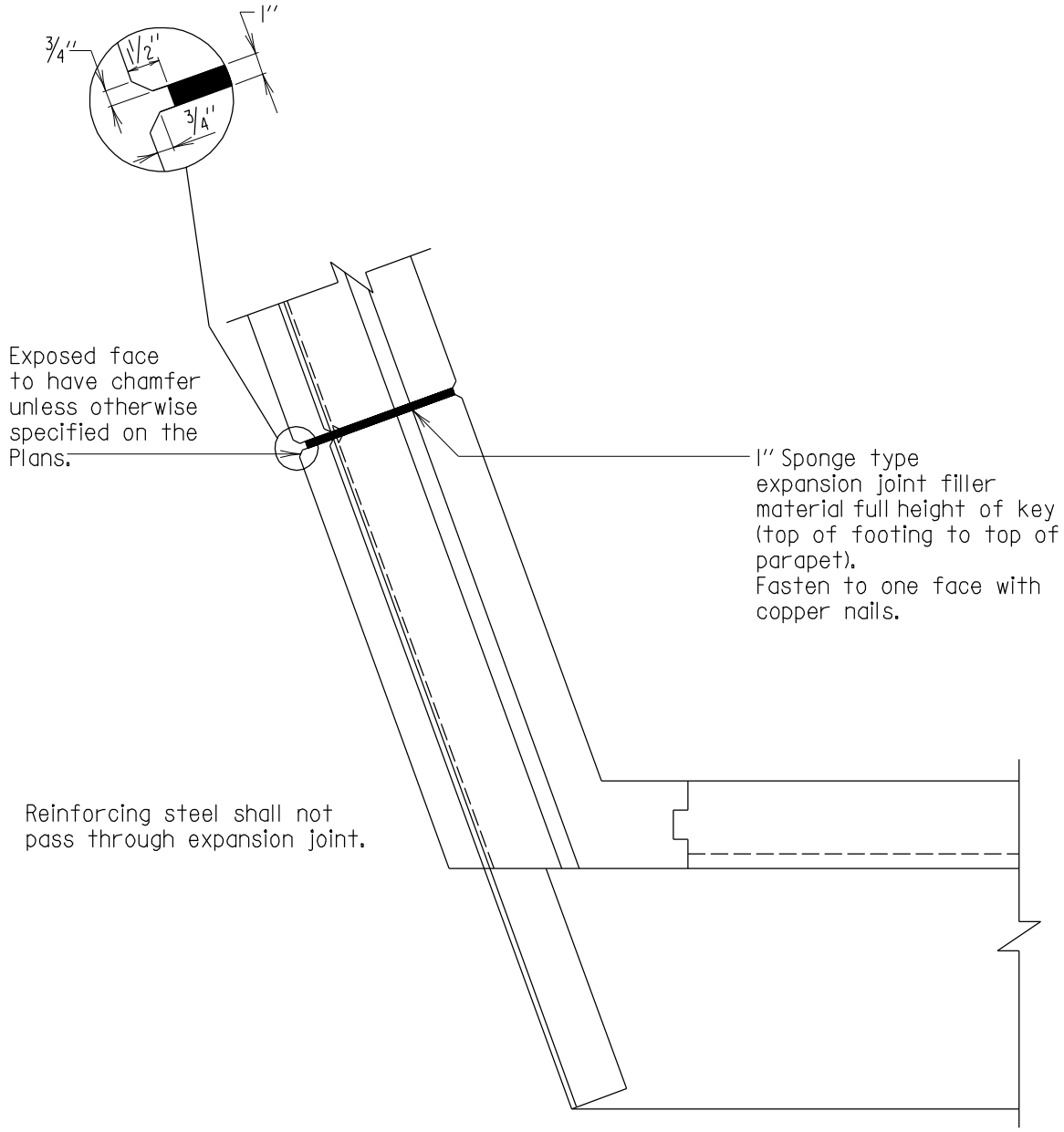

PLAN
(WITHOUT SIDEWALK)
Scale: 1/2" = 1'-0"

Note:
1. For details not shown see sheet 2 of 3.
2. This joint is required when distance from joint to end of wall is 25' or greater.
3. Material in end post area shall be cut to fit shape of end post.
4. *Slanted lettering indicates notes "For Office Use Only".*
5. *Wing wall expansion joint locations shall be located within a striated panel, or edge of architectural treatment where abutment has this requirement.*

APPROVAL
E.S. Freedman DIRECTOR OFFICE OF BRIDGE DEVEL.
DATE: 5/26/88

REVISIONS	
SHA	FHWA
8-4-98	·
3-22-06	·
·	·
·	·

FHWA APPROVAL
DATE: 6-8-90

STATE OF MARYLAND
DEPARTMENT OF TRANSPORTATION
STATE HIGHWAY ADMINISTRATION
OFFICE OF BRIDGE DEVELOPMENT

STEPPED EXPANSION JOINT FOR WING WALLS AT ABUTMENTS

STANDARD NO. BR-SB(6.18)-88-196 SHEET 1 OF 3

SUBSTRUCTURE ABUT.

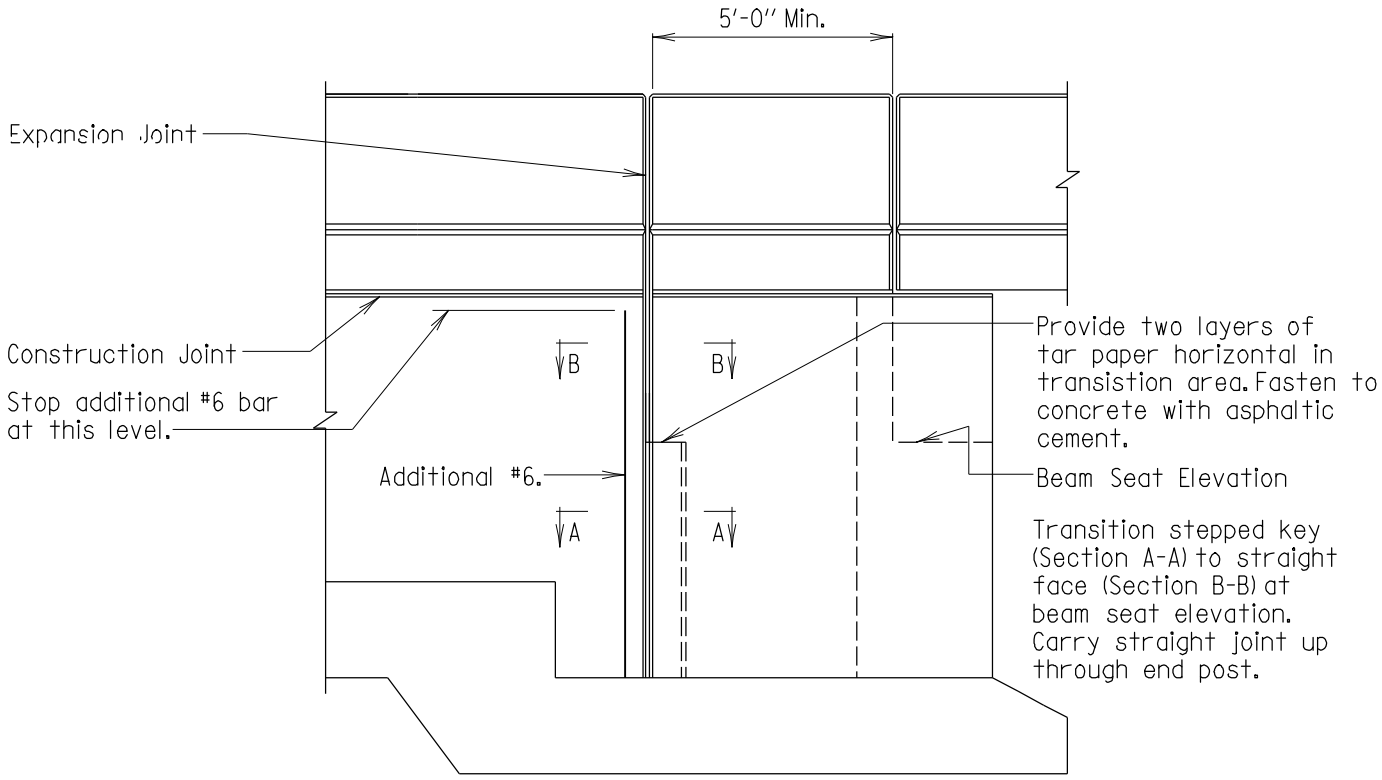

ELEVATION
Scale: 1/4" = 1'-0"

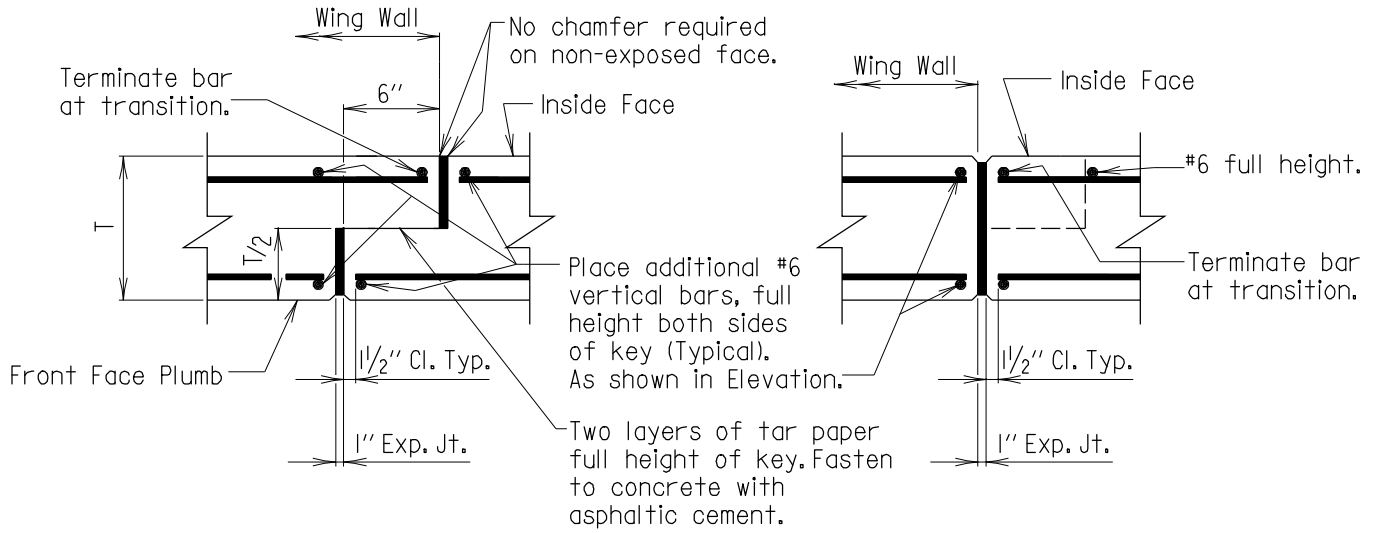

SECTION A-A
Scale: 1/2" = 1'-0"

Normal vertical steel not shown.

SECTION B-B
Scale: 1/2" = 1'-0"

Note:
See Standard No. REBAR-PL(2.13)-94-298 for placement of bars.

APPROVAL		
R.S. Freedman DIRECTOR OFFICE OF BRIDGE DEVEL. DATE: 5/26/88		
REVISIONS		
SHA	FHWA	
10-27-92	·	
1-7-93	·	
3-3-94	·	
11-17-97	·	

FHWA APPROVAL
DATE: 6-8-90

STATE OF MARYLAND
DEPARTMENT OF TRANSPORTATION
STATE HIGHWAY ADMINISTRATION
OFFICE OF BRIDGE DEVELOPMENT

STEPPED EXPANSION JOINT FOR WING WALLS AT ABUTMENTS

STANDARD NO. BR-SB(6.18)-88-196

SHEET 2 OF 3

SUBSTRUCTURE ABUT.

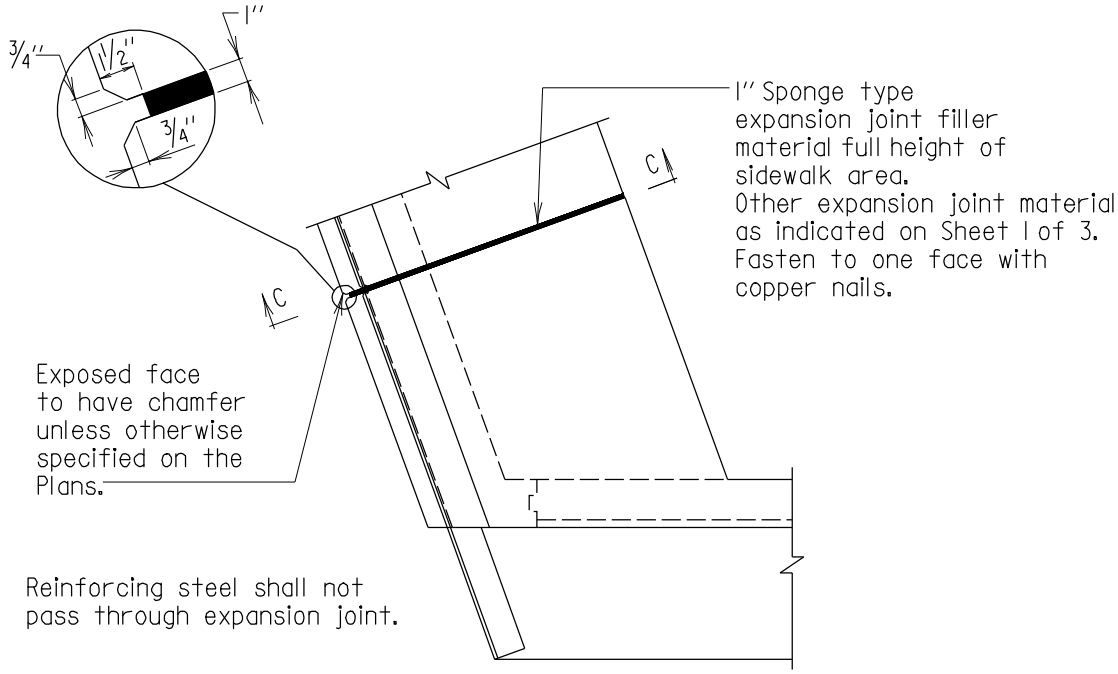

PLAN
(WITH SIDEWALK)
Scale: 1/4" = 1'-0"

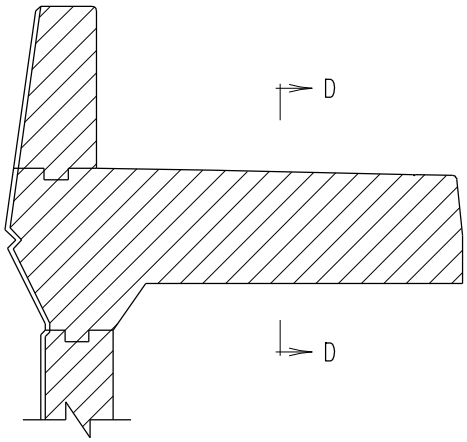

SECTION C-C
Scale: 3/8" = 1'-0"

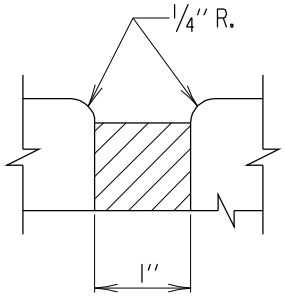

SECTION D-D
Scale: 1/2" = 1"

See notes on Sheet 1 of 3.

APPROVAL		
E.S. Friedman DIRECTOR OFFICE OF BRIDGE DEVEL. DATE: 5/26/88		
REVISIONS		
SHA	FHWA	
8-4-98	·	
3-22-06	·	
·	·	
·	·	

FHWA APPROVAL
DATE: .

STATE OF MARYLAND
DEPARTMENT OF TRANSPORTATION
STATE HIGHWAY ADMINISTRATION
OFFICE OF BRIDGE DEVELOPMENT

STEPPED EXPANSION JOINT FOR WING WALLS AT ABUTMENTS

STANDARD NO. BR-SB(6.18)-88-196

SHEET 3 OF 3

SUBSTRUCTURE ABUT.

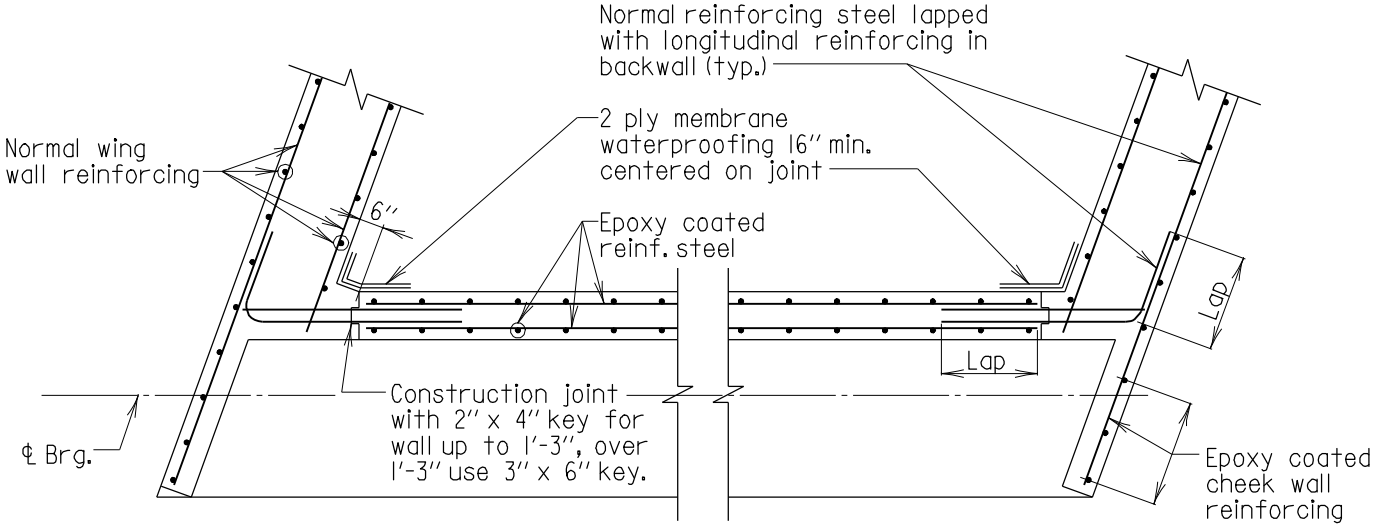

SECTION ABOVE BRIDGE SEAT

Scale: 1/4" = 1'-0"

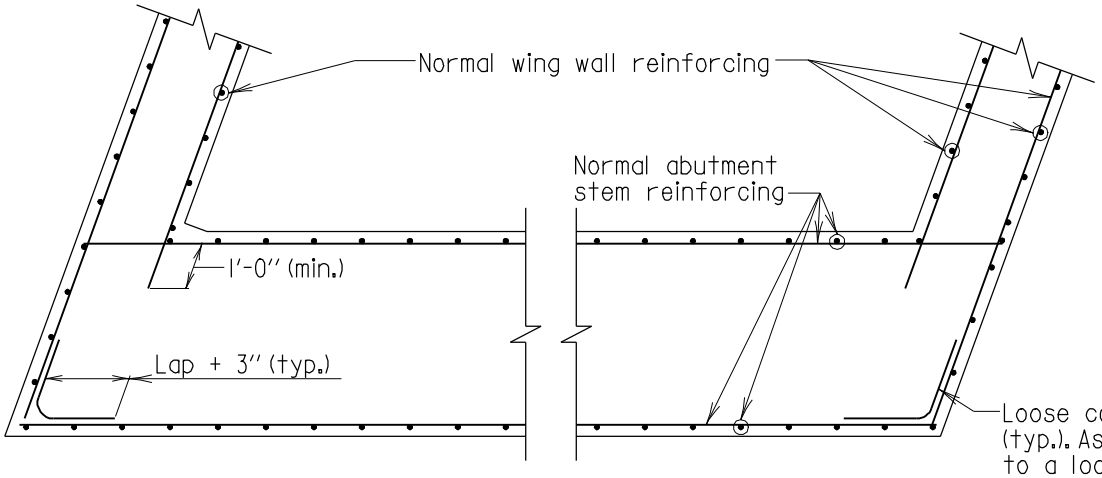

Loose corner bar (typ.). As an option to a loose corner bar, the longitudinal steel may be extended and bent to the required lap.

SECTION BELOW BRIDGE SEAT

Scale: 1/4" = 1'-0"

Note:
1. For bar lap lengths, see appropriate bar lap charts.
2. For normal reinforcing steel size and spacing refer to typical abutment and wing wall sections.

FOR OFFICE USE ONLY

APPROVAL	
R.S. Freedman DIRECTOR OFFICE OF BRIDGE DEVEL. DATE: 3/15/95	
REVISIONS	
SHA	FHWA
10-27-95	·
1-22-01	·
·	·
·	·

FHWA APPROVAL
DATE: .

STATE OF MARYLAND
DEPARTMENT OF TRANSPORTATION
STATE HIGHWAY ADMINISTRATION
OFFICE OF BRIDGE DEVELOPMENT

ABUTMENT/WING WALL CONNECTION REINFORCING DETAILS

STANDARD NO. BR-SB(6.42)-94-303 SHEET 1 OF 1

SUBSTRUCTURE ABUT.

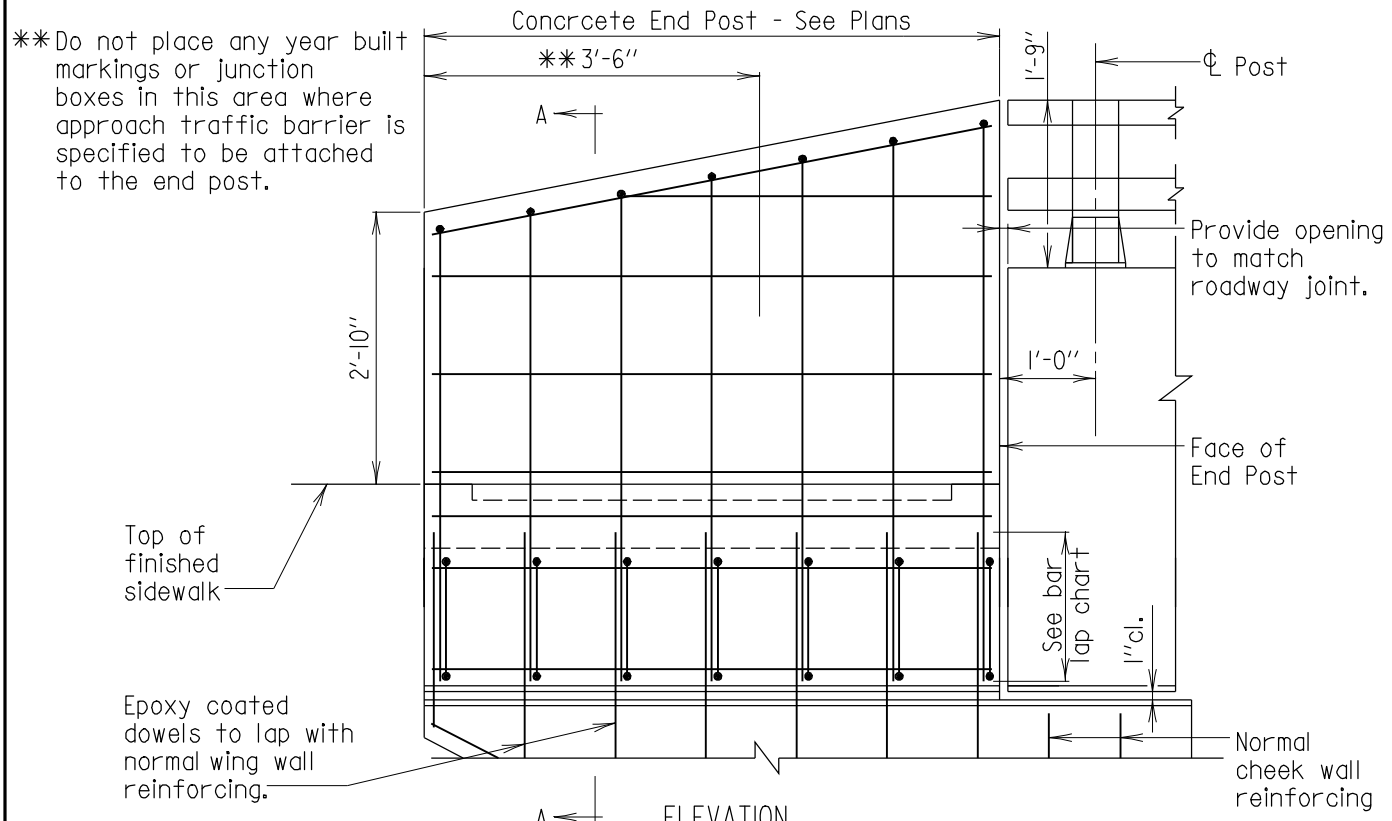

ELEVATION

Scale: 1/2" = 1'-0"

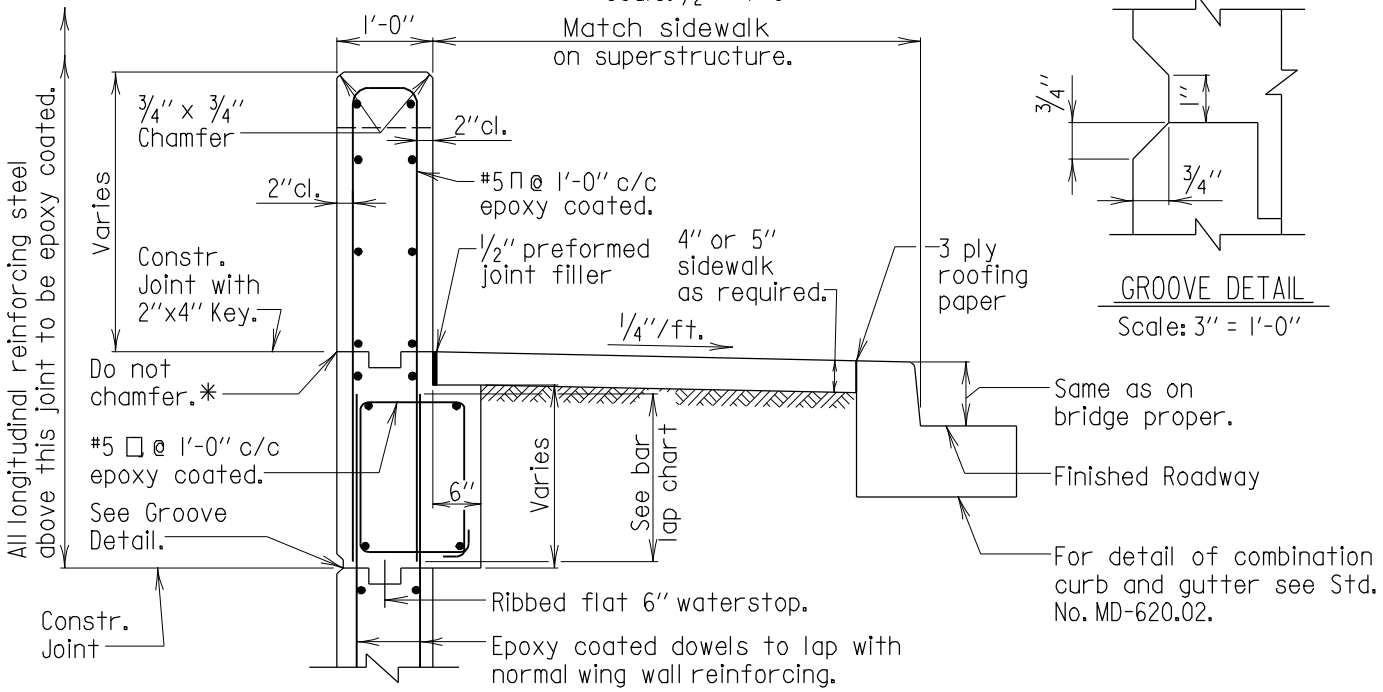

GROOVE DETAIL

Scale: 3" = 1'-0"

SECTION A-A

Scale: 1/2" = 1'-0"

* In order to insure a smooth and acceptable surface, 420.03.11 will be strictly adhered to.

Notes:

1. All longitudinal bars are #5 spaced as shown, maximum spacing 1'-3".
2. All keys are nominal size.
3. When striations are specified, see Standard No. M(6.11)86-181 for revisions to Section A-A.
4. Place vertical joint at end of backwall at sidewalk and curb.

APPROVAL	
E.S. Freedman DIRECTOR OFFICE OF BRIDGE DEVEL.	
DATE: 7/29/98	
REVISIONS	
SHA	FHWA
1-22-01	·
9-22-06	·
·	·
·	·

FHWA APPROVAL
DATE:

STATE OF MARYLAND
DEPARTMENT OF TRANSPORTATION
STATE HIGHWAY ADMINISTRATION
OFFICE OF BRIDGE DEVELOPMENT

BRIDGE END POST (WITH SEPARATE SIDEWALK) FOR BRIDGE WITH RAILING

STANDARD NO. BR-SB(6.45)-98-329 SHEET 1 OF 1

SUBSTRUCTURE ABUT.

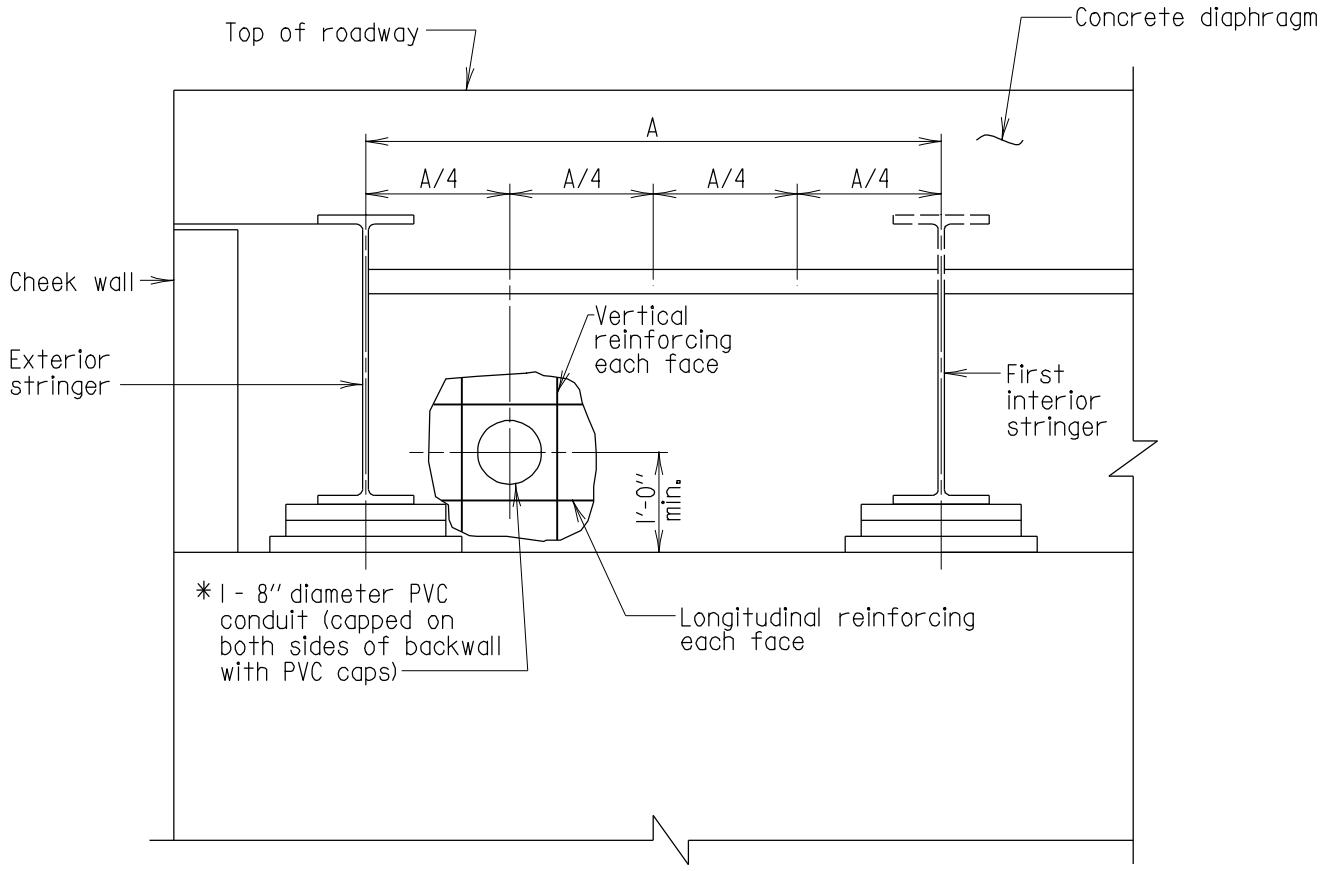

* Conduit shall be placed parallel to the adjacent stringer. Adjust placement of backwall reinforcing to allow conduit to pass through reinforcing as shown.

ELEVATION

Scale: 1/2" = 1'-0"

Notes:

1. Conduits to be at each corner of bridge as located in above detail. On dual bridges the conduits shall be located at all eight locations.
2. Pipe must extend past front face of backwall 6". Pipe to extend from rear face 5 feet beyond endpost/wingwall.
3. For PVC requirements see Section 905.
4. Cost, complete in place, to be incidental to other pertinent bid items.

APPROVAL	
E.S. Freedman DIRECTOR OFFICE OF BRIDGE DEVEL. DATE: 1/13/99	
REVISIONS	
SHA	FHWA
1-22-01	·
5-8-06	·
12-4-08	·
·	·

FHWA APPROVAL
DATE: .

STATE OF MARYLAND
DEPARTMENT OF TRANSPORTATION
STATE HIGHWAY ADMINISTRATION
OFFICE OF BRIDGE DEVELOPMENT

SLEEVES FOR FUTURE UTILITIES AT ABUTMENT BACKWALLS

STANDARD NO. BR-SB(6.46)-99-330 SHEET 1 OF 1

SUBSTRUCTURE ABUT.

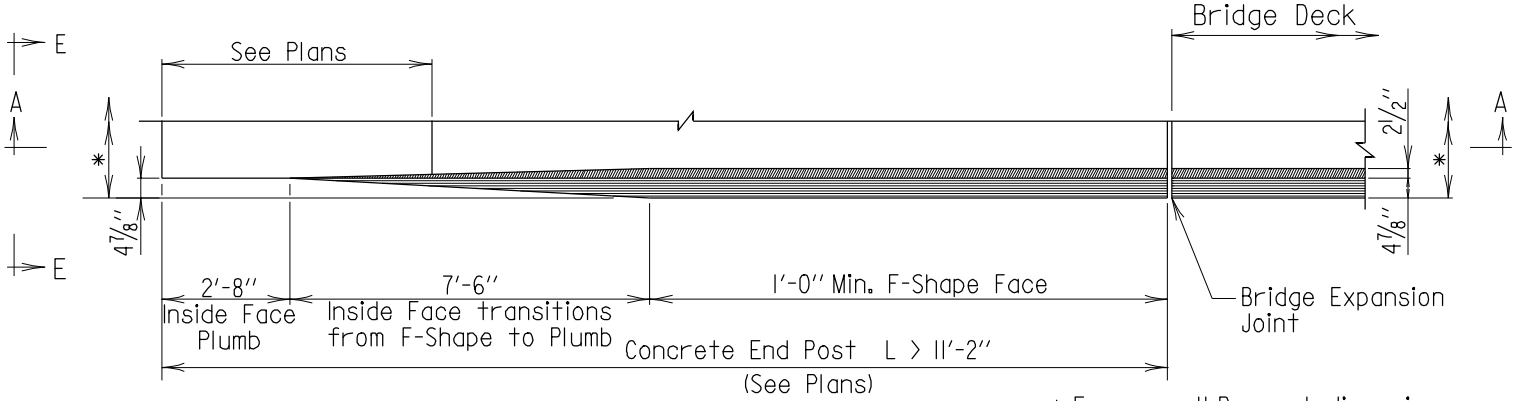

PLAN

Scale: 1/4''=1'-0''

* For overall Parapet dimensions, see sheets 3 and 4 of 4.

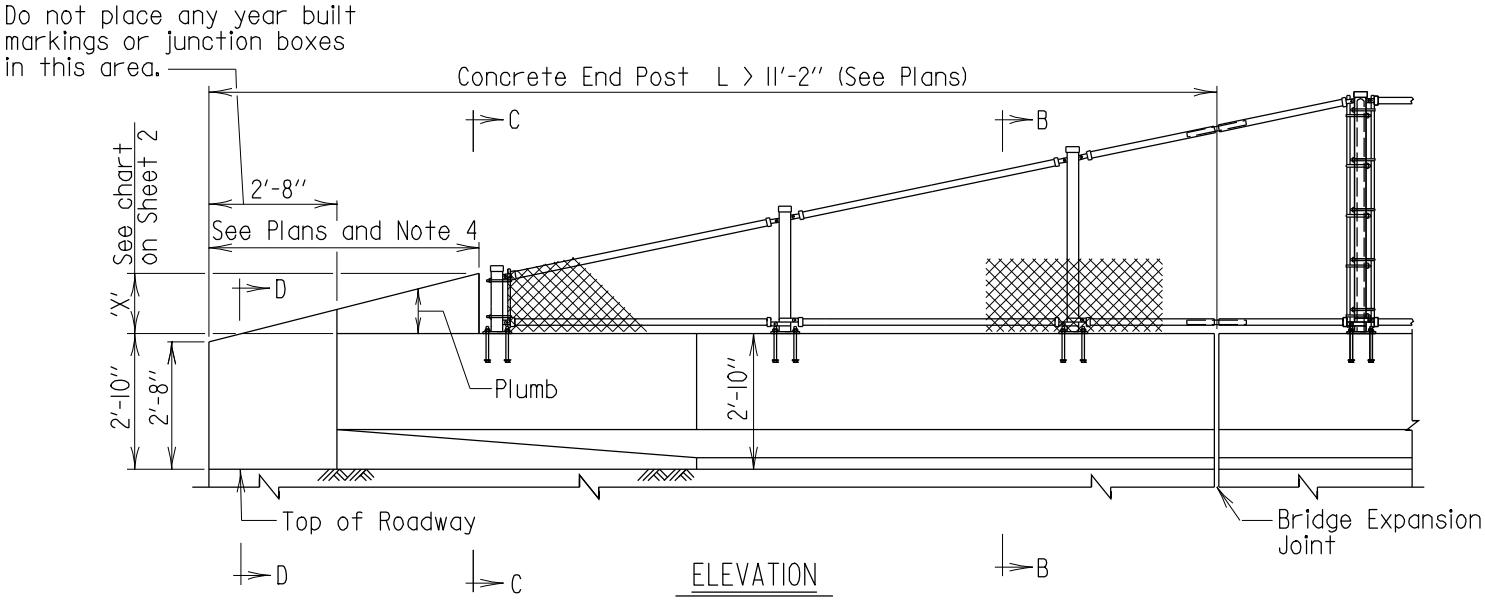

ELEVATION

Scale: 1/4''=1'-0''

Notes:

1. Use on the approach end of bridge when end post length is greater than 11'-2''.
2. Thrie Beam Traffic Barrier not shown.
3. Type II fence shown, see Plans for fence or railing layout and details.
4. Taper barrier height to 2'-8'' when Thrie Beam is required. Taper barrier height to 2'-10'' and eliminate F-Shape transition when adjacent to concrete F-Shape barrier.

Note to Designer:
This standard contains details for straight back, diamond back and recessed back parapets. Include the appropriate shape in the Contract Plans.

FHWA APPROVAL
DATE:

APPROVAL
DIRECTOR
OFFICE OF BRIDGE DEVEL.
DATE: 6/1/05

REVISIONS
SHA
FHWA

STATE OF MARYLAND
DEPARTMENT OF TRANSPORTATION
STATE HIGHWAY ADMINISTRATION
OFFICE OF BRIDGE DEVELOPMENT

34'' F-SHAPE PARAPET END POST WITH FENCING OR RAILING
APPROACH END, END POST LENGTH > 11'-2''

STANDARD NO. BR-SB(6.47)-05-362

SHEET 1 OF 4

SUBSTRUCTURE ABUT.

'X'	Fence or Railing Type
1'-0"	One Strand Railing
1'-3"	Type II Fence
1'-9"	Two Strand Railing

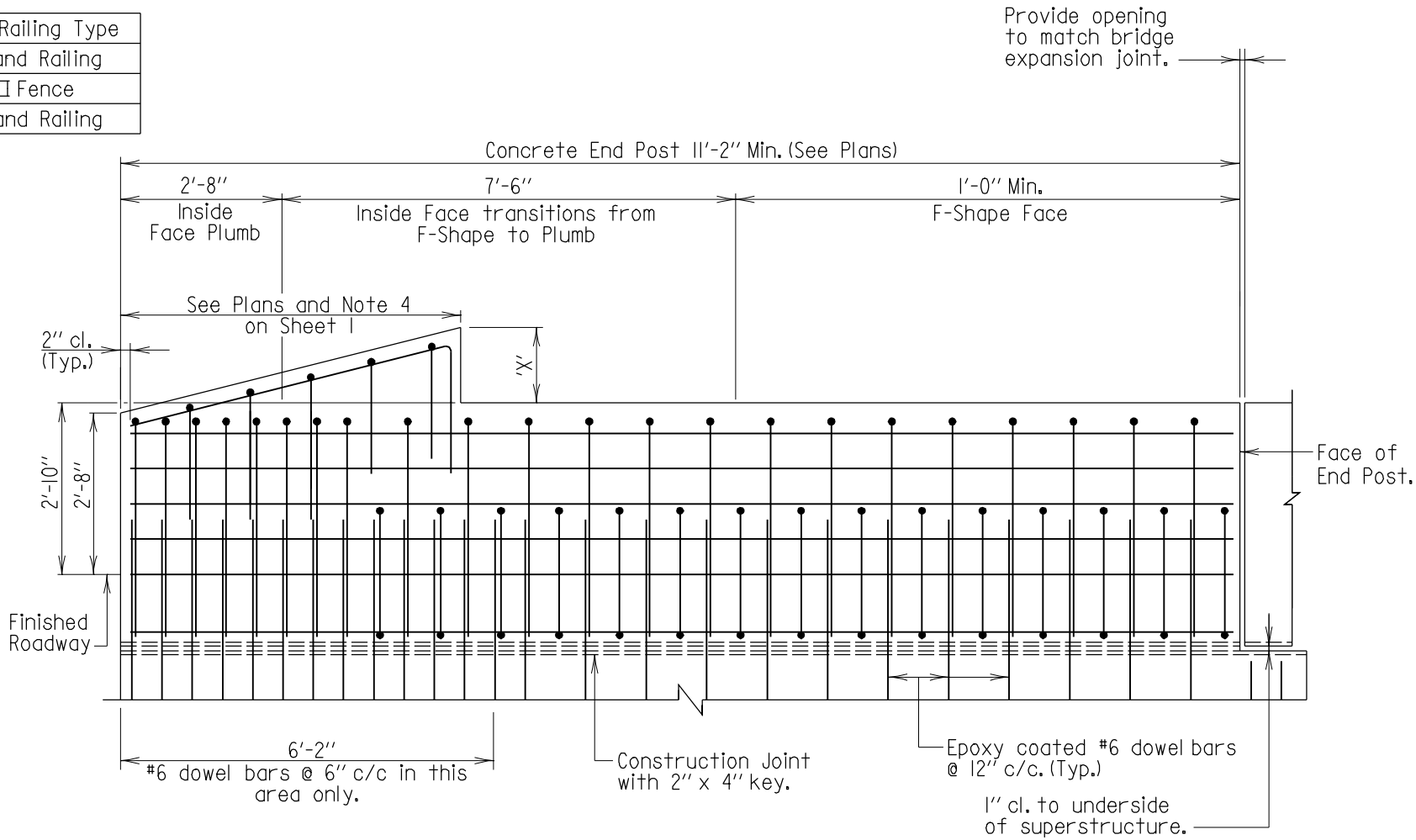

SECTION A-A

Scale: 3/8"=1'-0"

Notes:
1. For Parapet Reinforcing Details, see sheets 3 and 4.
2. Fencing or Railing not shown.
3. If applicable, reinforcing for coping not shown.

Note to Designer:
This standard contains details for straight back, diamond back and recessed back parapets. Include the appropriate shape in the Contract Plans.

APPROVAL
OFFICE OF BRIDGE DEVEL. DIRECTOR
DATE: 6/1/05

REVISIONS
SHA 11-14-05
FHWA

FHWA APPROVAL
DATE:

STATE OF MARYLAND
DEPARTMENT OF TRANSPORTATION
STATE HIGHWAY ADMINISTRATION
OFFICE OF BRIDGE DEVELOPMENT

34" F-SHAPE PARAPET END POST WITH FENCING OR RAILING
APPROACH END, END POST LENGTH > 11'-2"

STANDARD NO. BR-SB(6.47)-05-362

SHEET 2 OF 4

SUBSTRUCTURE ABUT.

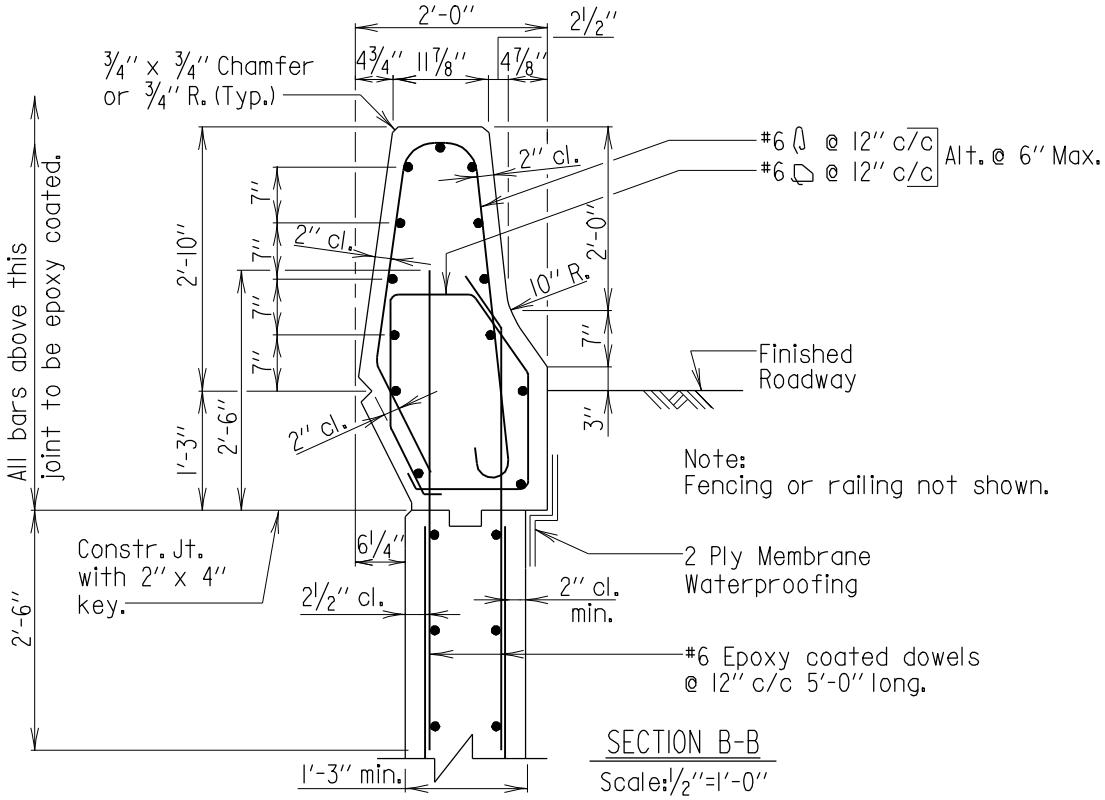

SECTION B-B

Scale: 1/2"=1'-0"

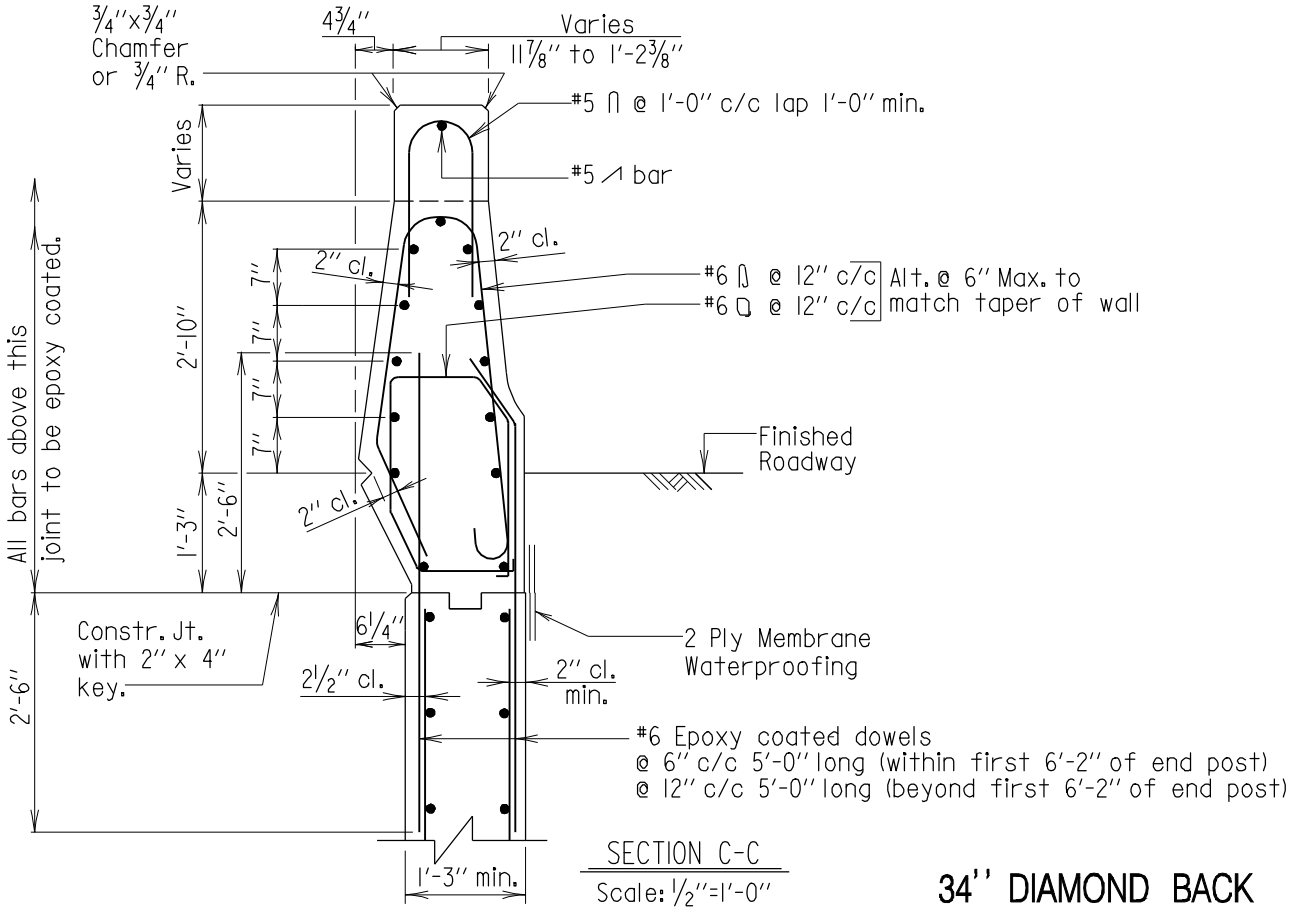

SECTION C-C

Scale: 1/2"=1'-0"

34" DIAMOND BACK

Note:
All longitudinal bars are #5
spaced as shown.

APPROVAL	
DIRECTOR OFFICE OF BRIDGE DEVEL.	
DATE: 6/1/05	
REVISIONS	
SHA	FHWA
11-14-05	

FHWA APPROVAL
DATE:

STATE OF MARYLAND
DEPARTMENT OF TRANSPORTATION
STATE HIGHWAY ADMINISTRATION
OFFICE OF BRIDGE DEVELOPMENT

34" F-SHAPE PARAPET END POST WITH
FENCING OR RAILING
APPROACH END, END POST LENGTH > 11'-2"

STANDARD NO. BR-SB(6.47)-05-362

SHEET 3 OF 4

SUBSTRUCTURE ABUT.

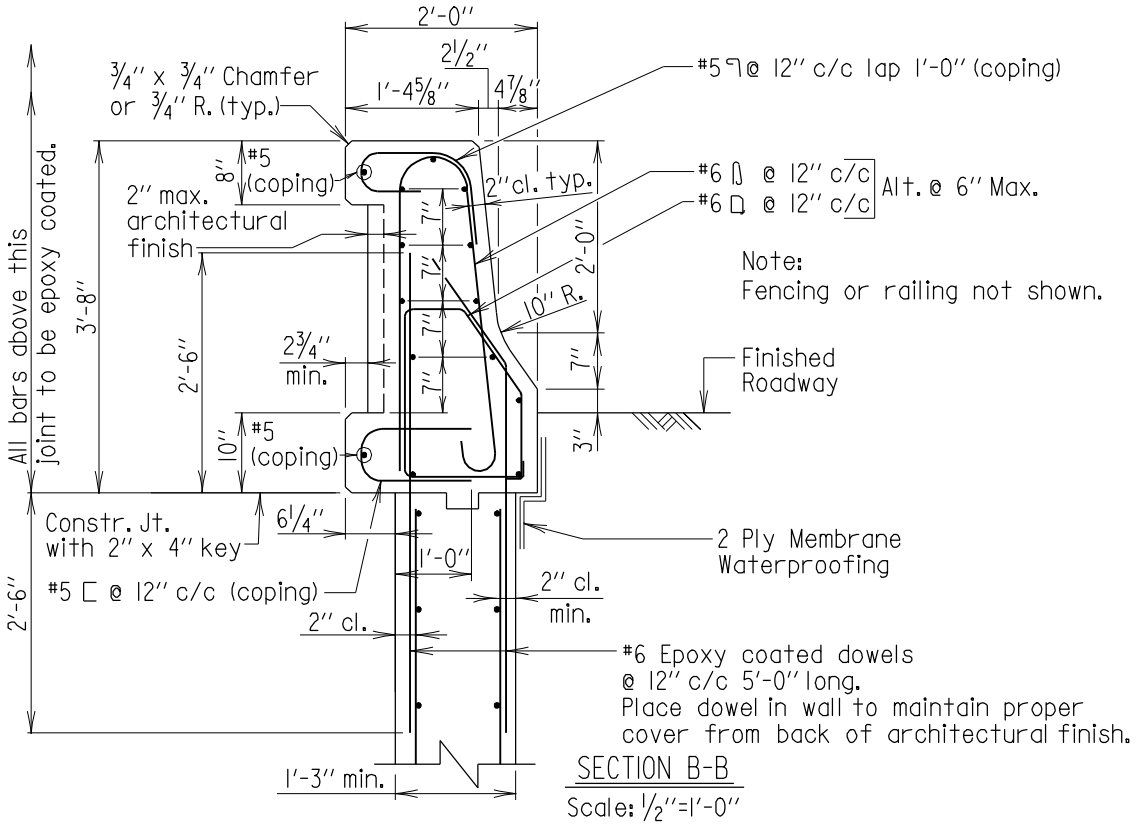

SECTION B-B

Scale: 1/2"=1'-0"

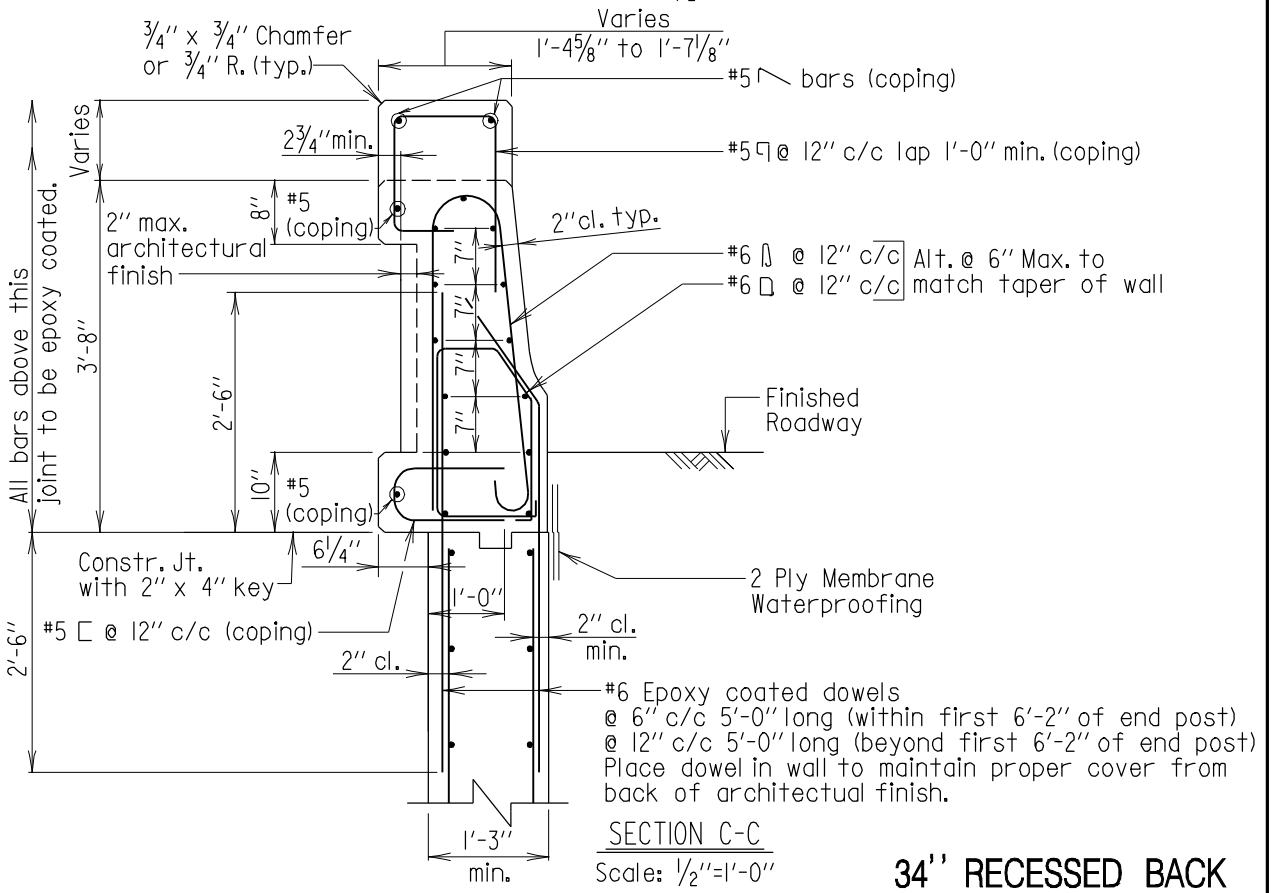

SECTION C-C

Scale: 1/2"=1'-0"

34" RECESSED BACK

APPROVAL	
DIRECTOR OFFICE OF BRIDGE DEVEL.	
DATE: 6/1/05	
REVISIONS	
SHA	FHWA
11-14-05	

FHWA APPROVAL
DATE:

STATE OF MARYLAND
DEPARTMENT OF TRANSPORTATION
STATE HIGHWAY ADMINISTRATION
OFFICE OF BRIDGE DEVELOPMENT

34" F-SHAPE PARAPET END POST WITH FENCING OR RAILING
APPROACH END, END POST LENGTH > 11'-2"

STANDARD NO. BR-SB(6.47)-05-362

SHEET 3 OF 4

SUBSTRUCTURE ABUT.

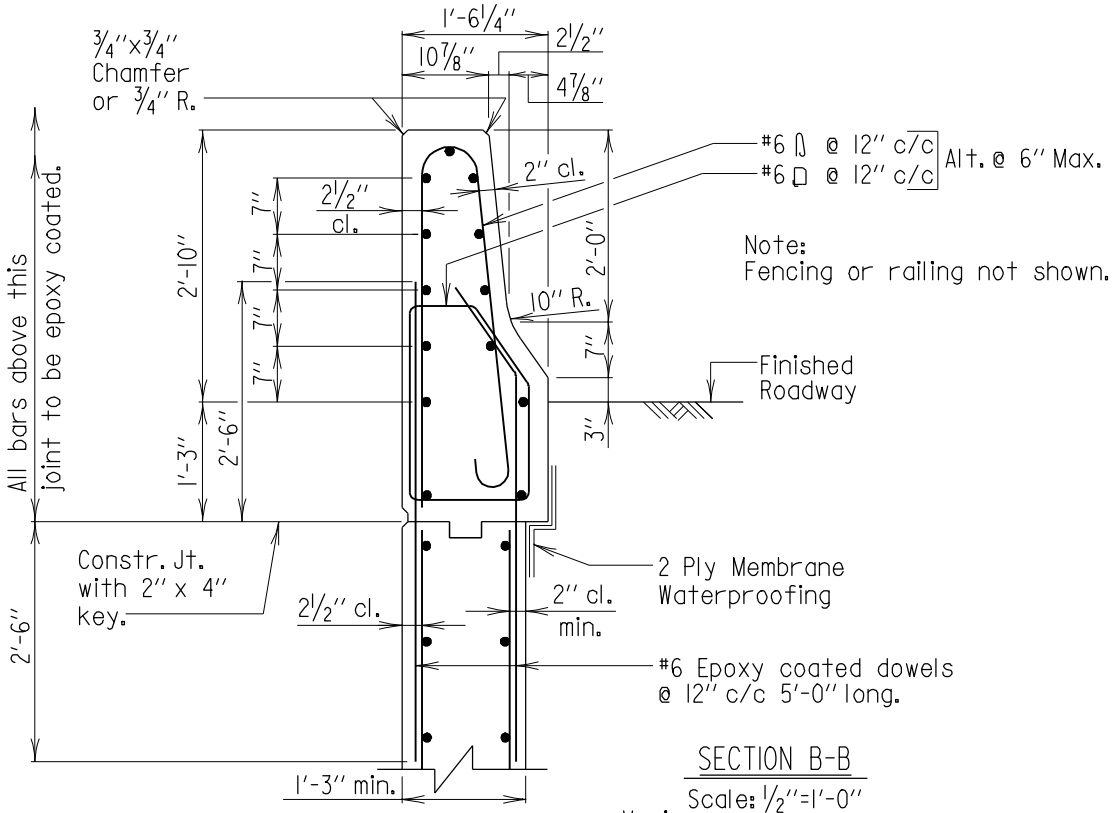

SECTION B-B

Scale: 1/2"=1'-0"

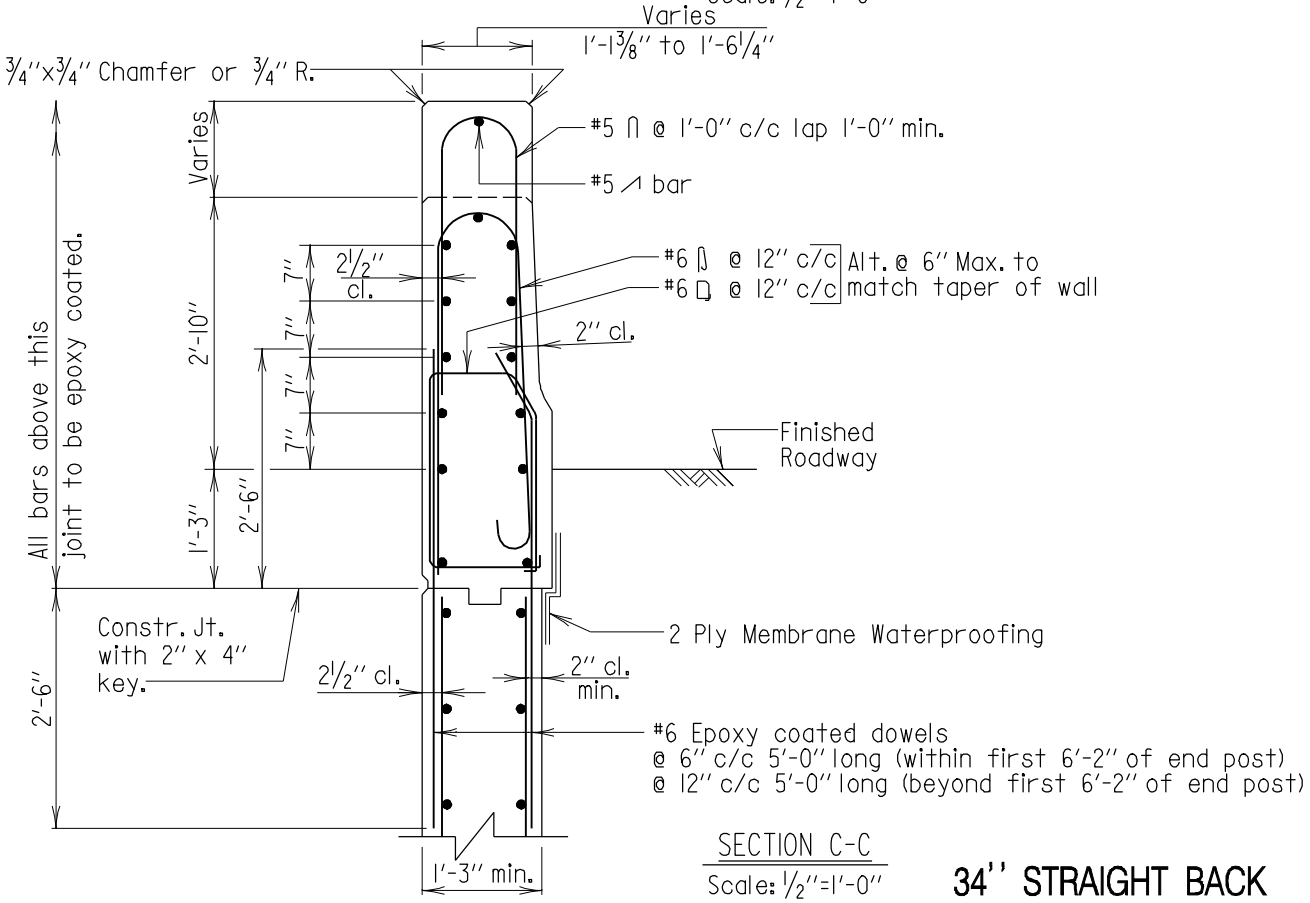

SECTION C-C

Scale: 1/2"=1'-0"

34" STRAIGHT BACK

Note:
All longitudinal bars are #5 spaced as shown.

APPROVAL	
DIRECTOR OFFICE OF BRIDGE DEVEL.	
DATE: 6/1/05	
REVISIONS	
SHA	FHWA
11-14-05	

FHWA APPROVAL
DATE:

STATE OF MARYLAND
DEPARTMENT OF TRANSPORTATION
STATE HIGHWAY ADMINISTRATION
OFFICE OF BRIDGE DEVELOPMENT

34" F-SHAPE PARAPET END POST WITH FENCING OR RAILING
APPROACH END, END POST LENGTH > 11'-2"

STANDARD NO. BR-SB(6.47)-05-362 SHEET 3 OF 4

SUBSTRUCTURE ABUT.

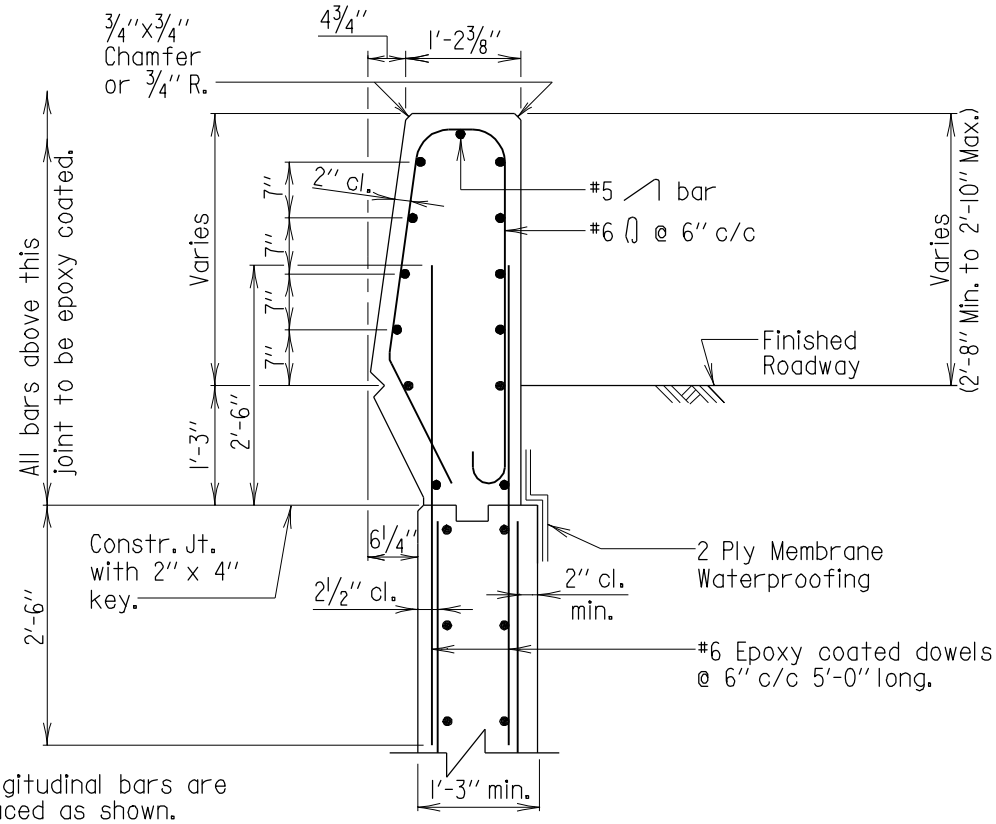

Note:
All longitudinal bars are #5 spaced as shown.

SECTION D-D
Scale: 1/2''=1'-0''

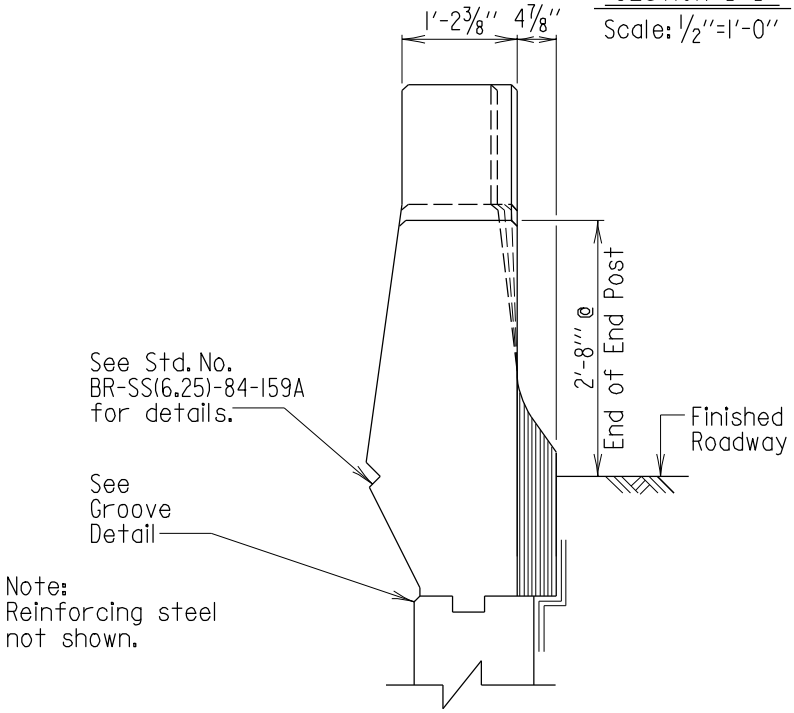

Note:
Reinforcing steel not shown.

VIEW E-E
Scale: 1/2''=1'-0''

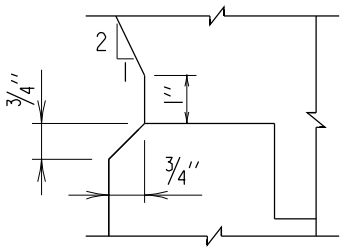

GROOVE DETAIL
Scale: 3''=1'-0''

34'' DIAMOND BACK

APPROVAL	
R S Freedman DIRECTOR OFFICE OF BRIDGE DEVEL. DATE: 6/1/05	
REVISIONS	
SHA	FHWA
11-14-05	

FHWA APPROVAL
DATE:

STATE OF MARYLAND
DEPARTMENT OF TRANSPORTATION
STATE HIGHWAY ADMINISTRATION
OFFICE OF BRIDGE DEVELOPMENT

34'' F-SHAPE PARAPET END POST WITH FENCING OR RAILING
APPROACH END, END POST LENGTH > 11'-2''

STANDARD NO. BR-SB(6.47)-05-362 SHEET 4 OF 4

SUBSTRUCTURE ABUT.

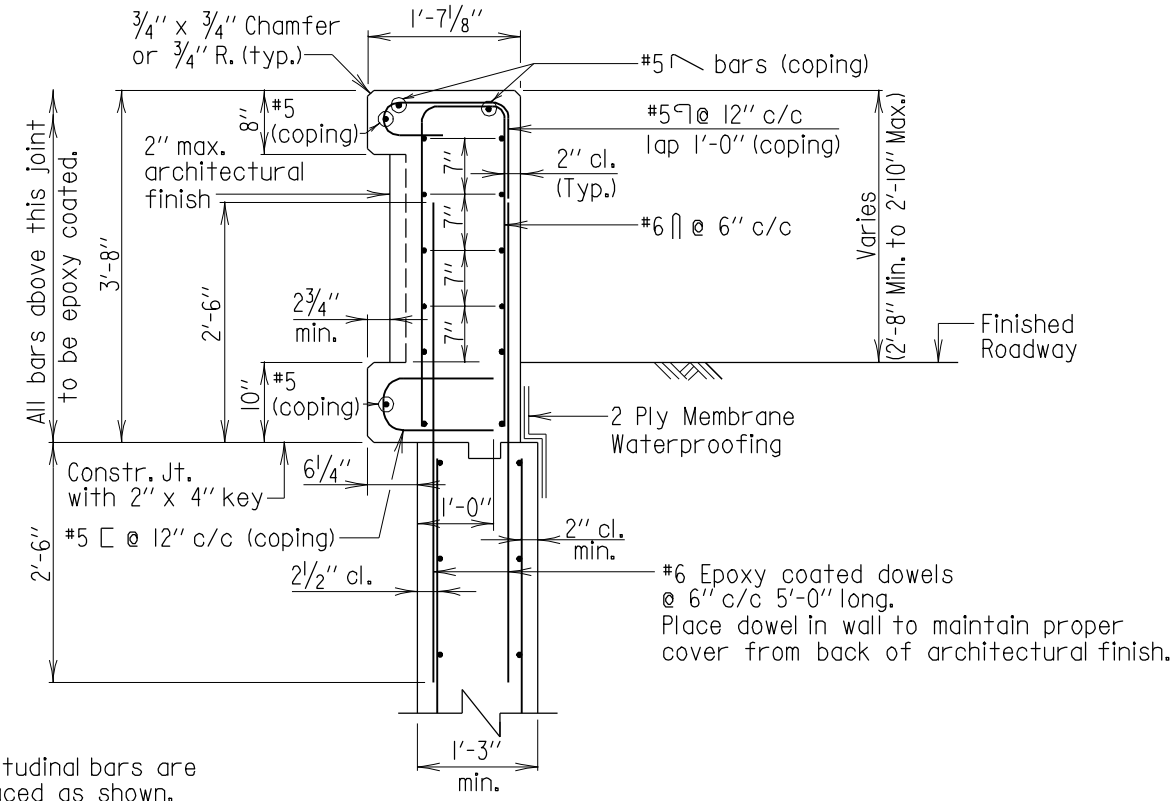

Note:
All longitudinal bars are #5's spaced as shown.

SECTION D-D
Scale: 1/2''=1'-0''

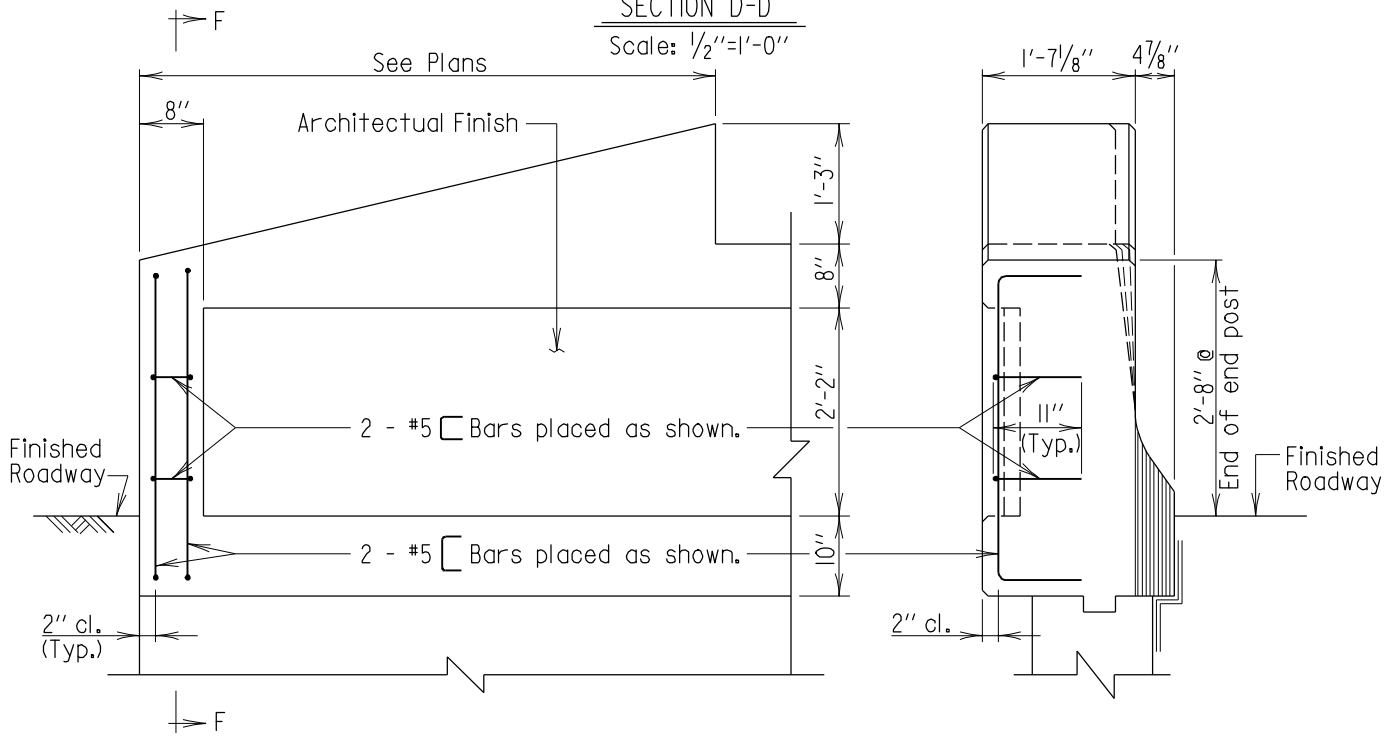

PARTIAL REAR ELEVATION
Scale: 1/2''=1'-0''

SECTION F-F
Scale: 1/2''=1'-0''

34'' RECESSED BACK

Note:
There is no View E-E for the 34'' Recessed Back End Post

APPROVAL
R S Freedman DIRECTOR OFFICE OF BRIDGE DEVEL.
DATE: 6/1/05

REVISIONS	
SHA	FHWA
11-14-05	

FHWA APPROVAL
DATE:

STATE OF MARYLAND
DEPARTMENT OF TRANSPORTATION
STATE HIGHWAY ADMINISTRATION
OFFICE OF BRIDGE DEVELOPMENT

34'' F-SHAPE PARAPET END POST WITH FENCING OR RAILING
APPROACH END, END POST LENGTH > 11'-2''

STANDARD NO. BR-SB(6.47)-05-362 SHEET 4 OF 4

SUBSTRUCTURE ABUT.

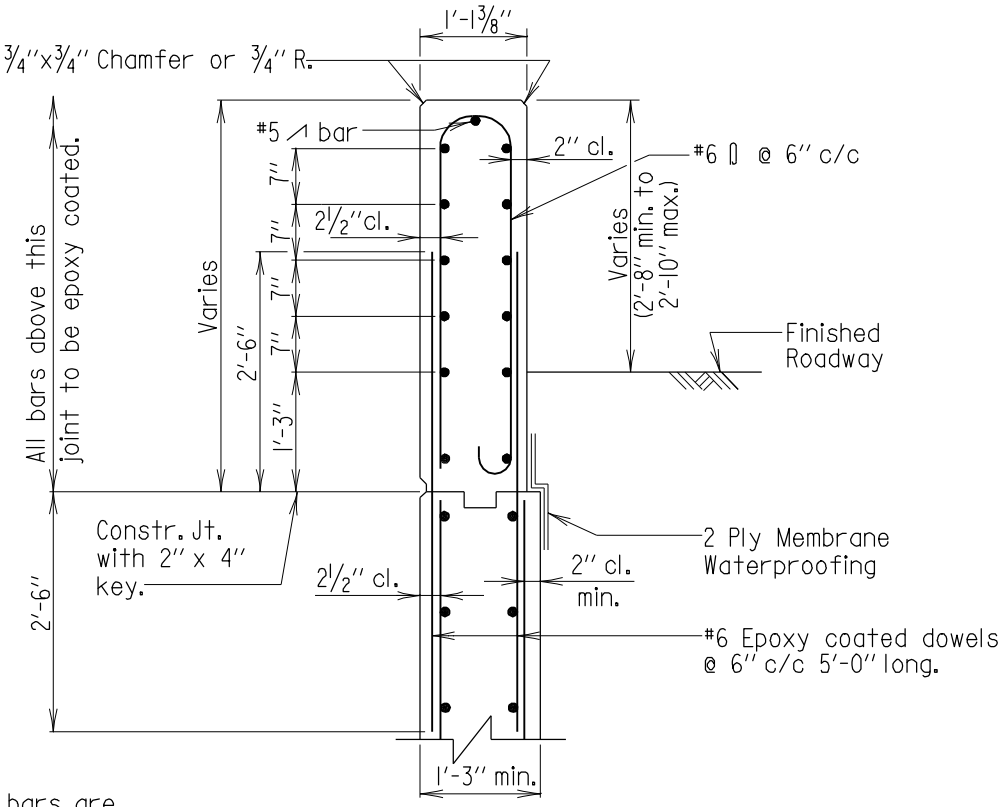

Note:
All longitudinal bars are #5 spaced as shown.

SECTION D-D

Scale: 1/2"=1'-0"

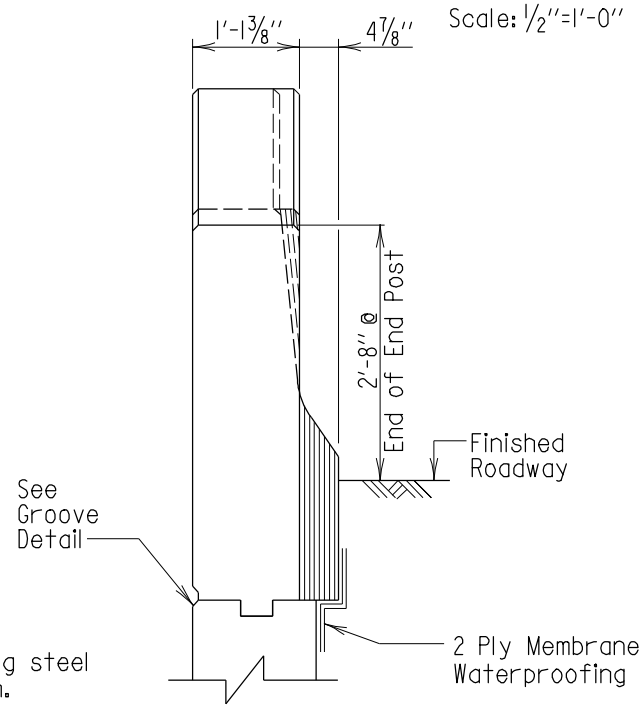

Note:
Reinforcing steel not shown.

VIEW E-E

Scale: 1/2"=1'-0"

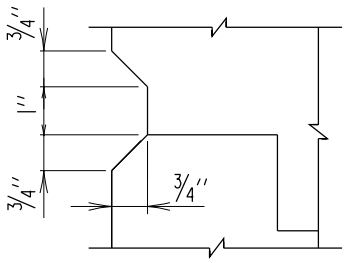

GROOVE DETAIL

Scale: 3"=1'-0"

34" STRAIGHT BACK

APPROVAL	
R.S. Freedman DIRECTOR OFFICE OF BRIDGE DEVEL. DATE: 6/1/05	
REVISIONS	
SHA	FHWA
11-14-05	

FHWA APPROVAL
DATE:

STATE OF MARYLAND
DEPARTMENT OF TRANSPORTATION
STATE HIGHWAY ADMINISTRATION
OFFICE OF BRIDGE DEVELOPMENT

34" F-SHAPE PARAPET END POST WITH FENCING OR RAILING
APPROACH END, END POST LENGTH > 11'-2"

STANDARD NO. BR-SB(6.47)-05-362 SHEET 4 OF 4

SUBSTRUCTURE ABUT.

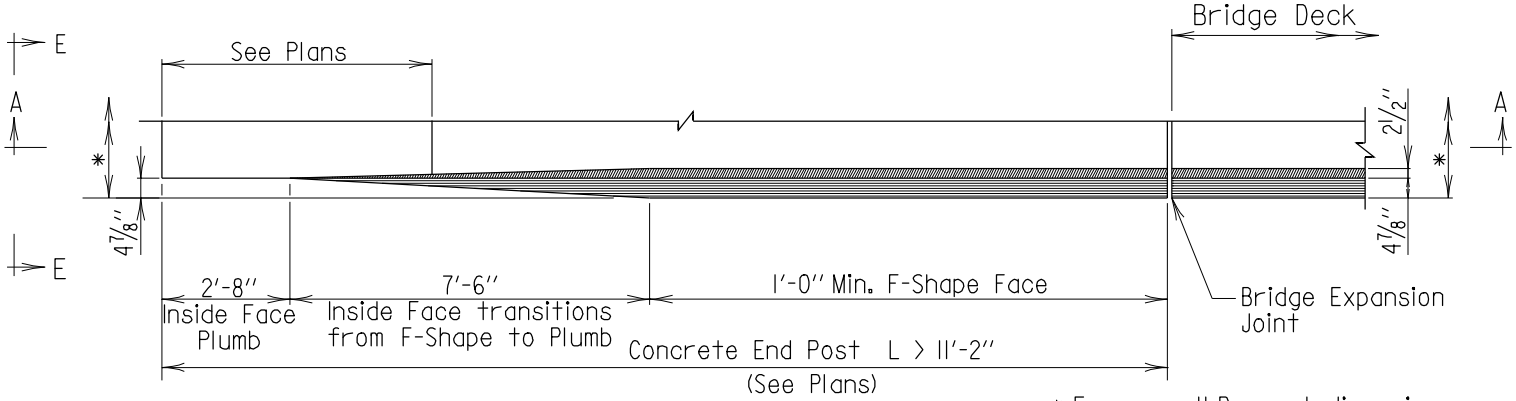

* For overall Parapet dimensions, see sheets 3 and 4 of 4.

PLAN

Scale: 1/4''=1'-0''

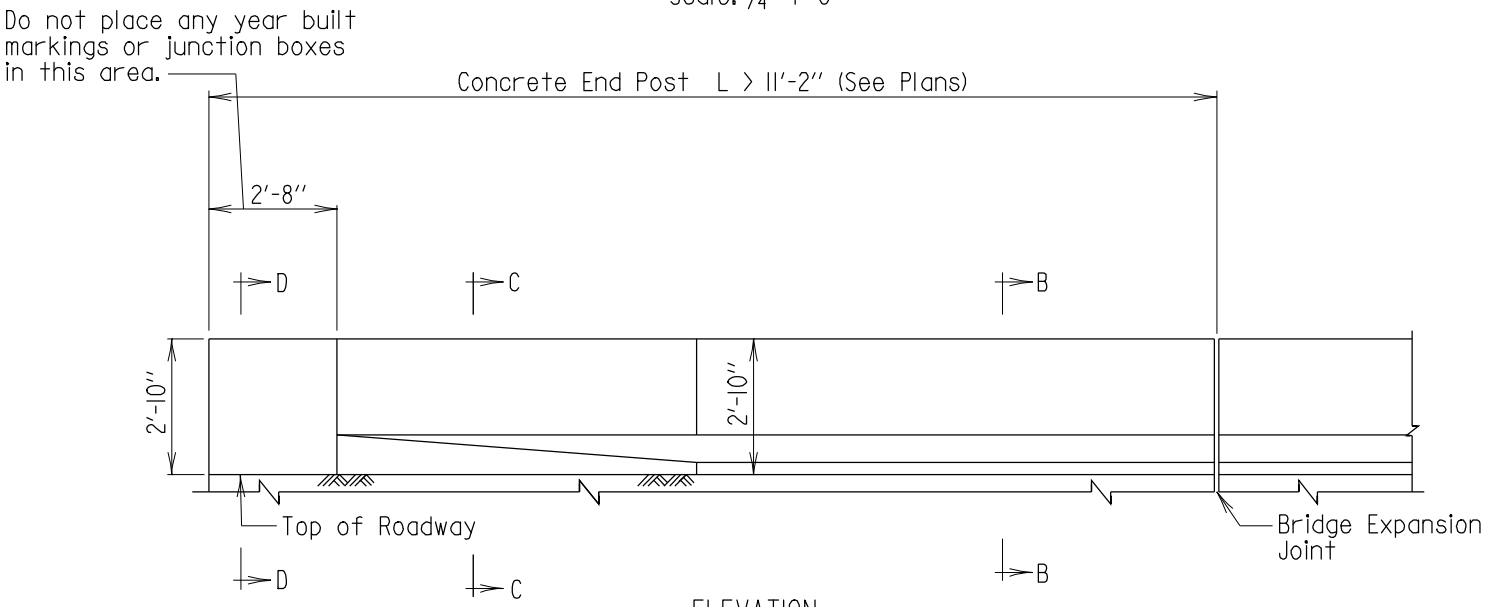

ELEVATION

Scale: 1/4''=1'-0''

Notes:
1. Use on the approach end of bridge when end post length is greater than 11'-2''.
2. Thrie Beam Traffic Barrier not shown.

Note to Designer:
This standard contains details for straight back, diamond back and recessed back parapets. Include the appropriate shape in the Contract Plans.

APPROVAL
DIRECTOR OFFICE OF BRIDGE DEVEL.
DATE: 6/1/05

REVISIONS
SHA
FHWA

FHWA APPROVAL
DATE:

STATE OF MARYLAND
DEPARTMENT OF TRANSPORTATION
STATE HIGHWAY ADMINISTRATION
OFFICE OF BRIDGE DEVELOPMENT

34'' F-SHAPE PARAPET END POST WITHOUT FENCING OR RAILING
APPROACH END, END POST LENGTH > 11'-2''

STANDARD NO. BR-SB(6.48)-05-363

SHEET 1 OF 4

SUBSTRUCTURE ABUT.

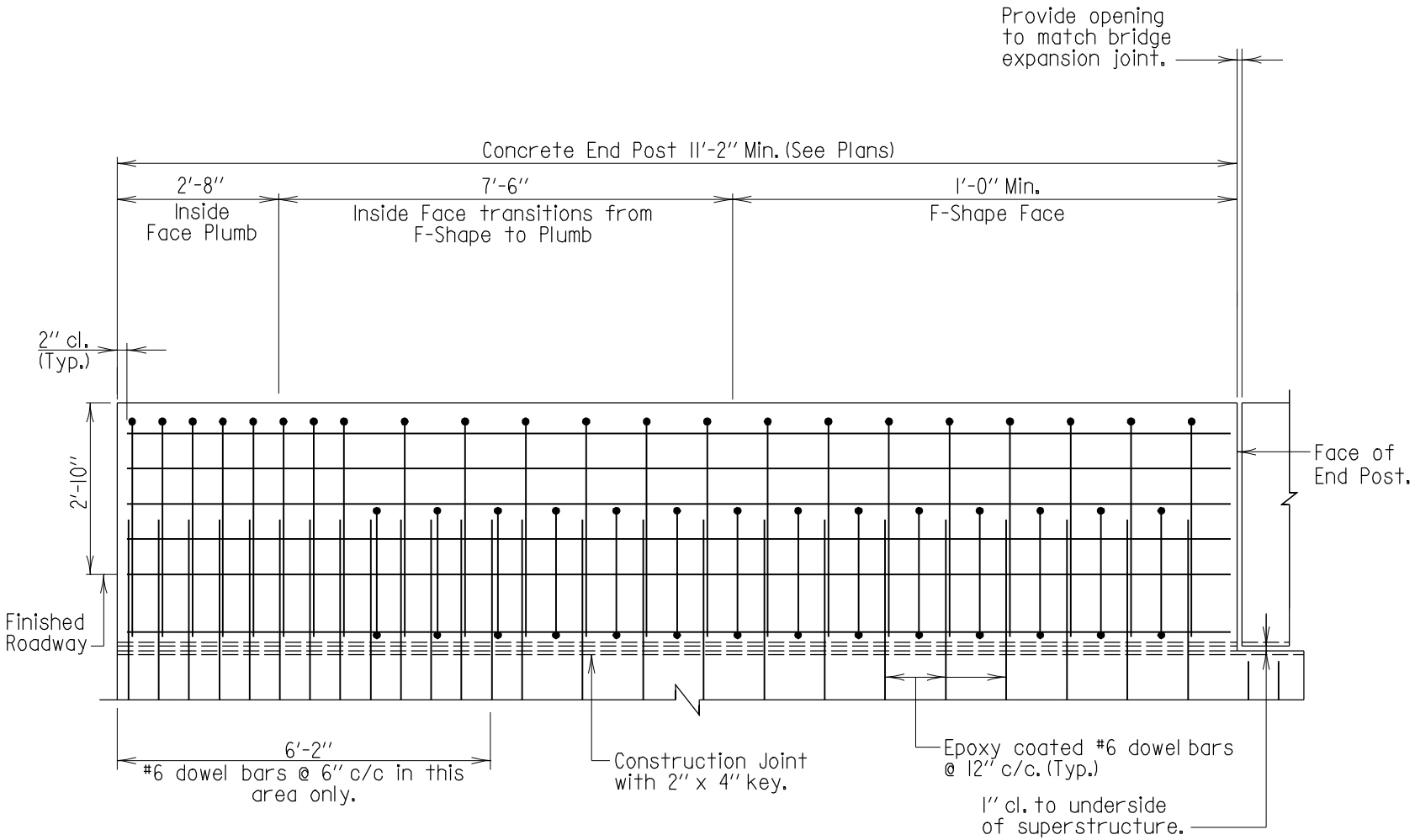

SECTION A-A

Scale: 3/8"=1'-0"

Notes:
1. For Parapet Reinforcing Details, see sheets 3 and 4.
2. If applicable, reinforcing for coping not shown.

Note to Designer:
This standard contains details for straight back, diamond back and recessed back parapets. Include the appropriate shape in the Contract Plans.

APPROVAL
DIRECTOR OFFICE OF BRIDGE DEVEL.
DATE: 6/1/05

REVISIONS

SHA	11-14-05
FHWA	

FHWA APPROVAL
DATE:

STATE OF MARYLAND
DEPARTMENT OF TRANSPORTATION
STATE HIGHWAY ADMINISTRATION
OFFICE OF BRIDGE DEVELOPMENT

34" F-SHAPE PARAPET END POST WITHOUT FENCING OR RAILING
APPROACH END, END POST LENGTH > 11'-2"

STANDARD NO. BR-SB(6.48)-05-363

SHEET 2 OF 4

SUBSTRUCTURE ABUT.

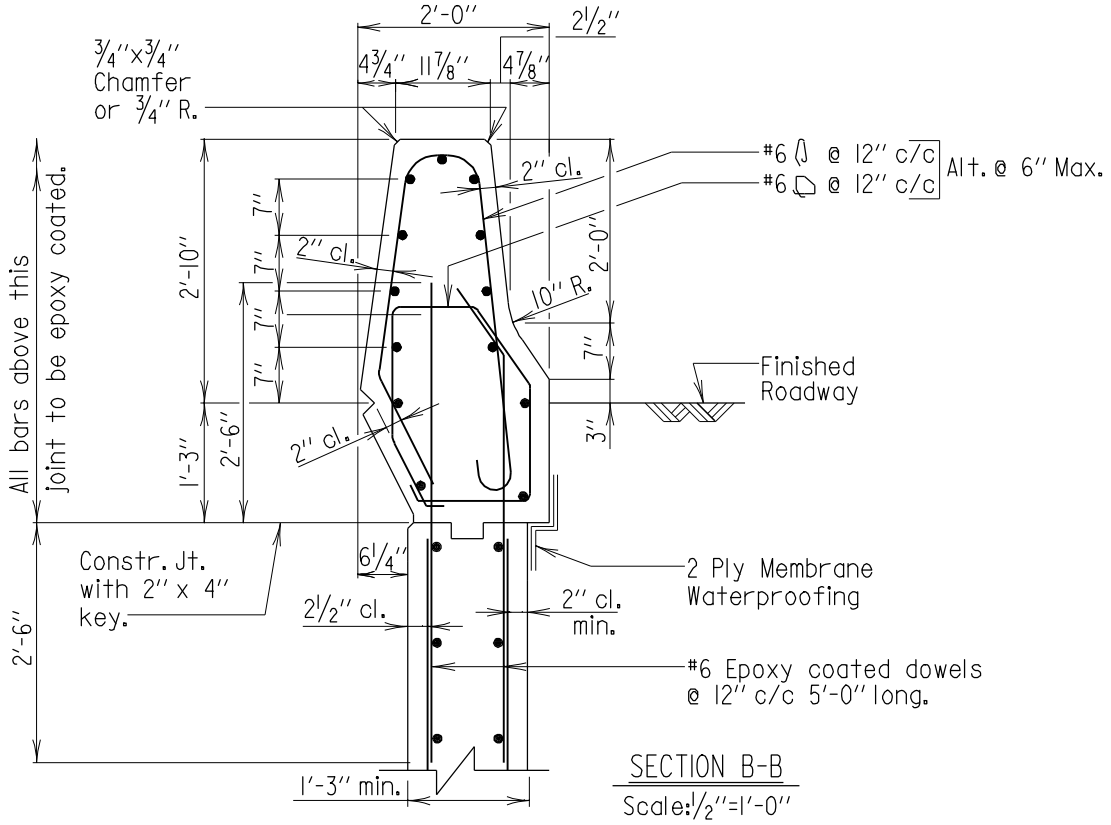

SECTION B-B

Scale: 1/2"=1'-0"

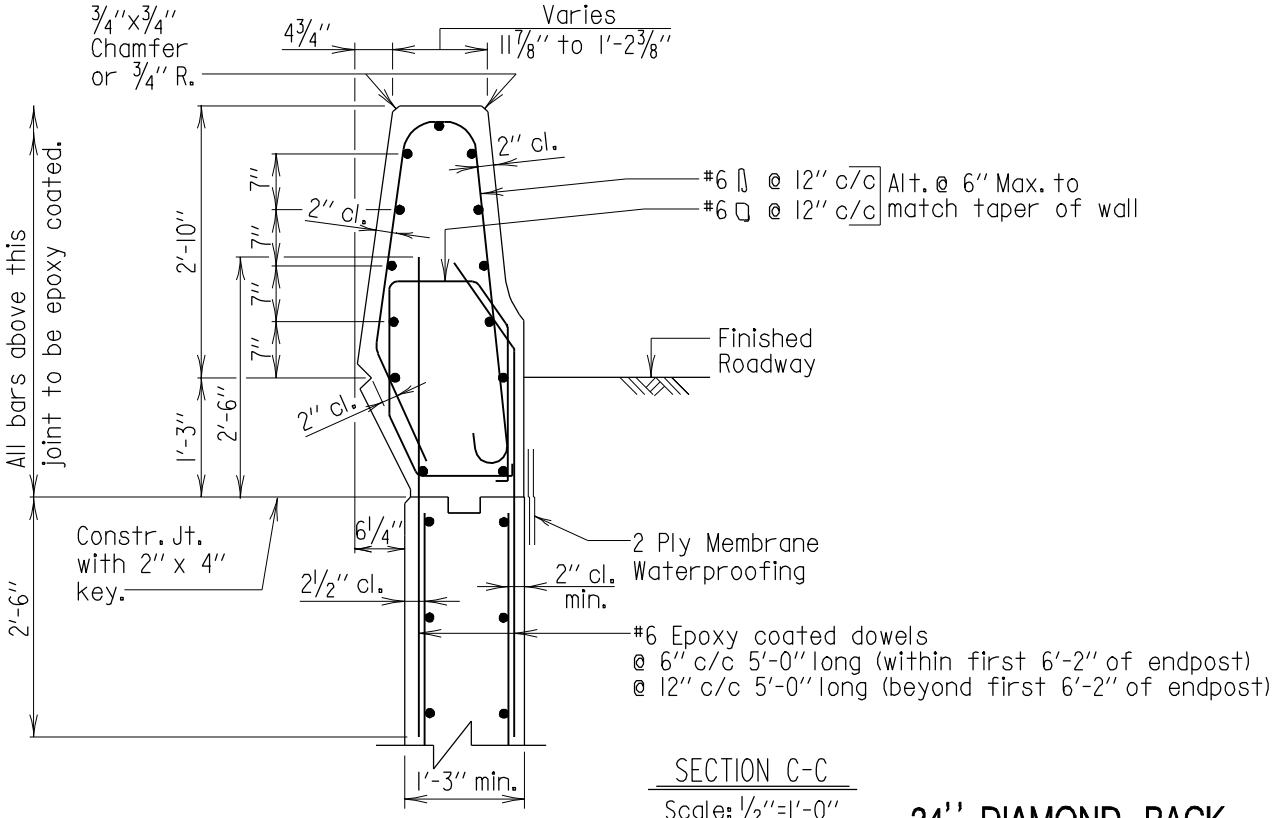

SECTION C-C

Scale: 1/2"=1'-0"

34" DIAMOND BACK

Note:
All longitudinal bars are #5 spaced as shown.

APPROVAL	
DIRECTOR OFFICE OF BRIDGE DEVEL.	
DATE: 6/1/05	
REVISIONS	
SHA	FHWA
11-14-05	

FHWA APPROVAL
DATE:

STATE OF MARYLAND
DEPARTMENT OF TRANSPORTATION
STATE HIGHWAY ADMINISTRATION
OFFICE OF BRIDGE DEVELOPMENT

34" F-SHAPE PARAPET END POST WITHOUT FENCING OR RAILING
APPROACH END, END POST LENGTH > 11'-2"

STANDARD NO. BR-SB(6.48)-05-363

SHEET 3 OF 4

SUBSTRUCTURE ABUT.

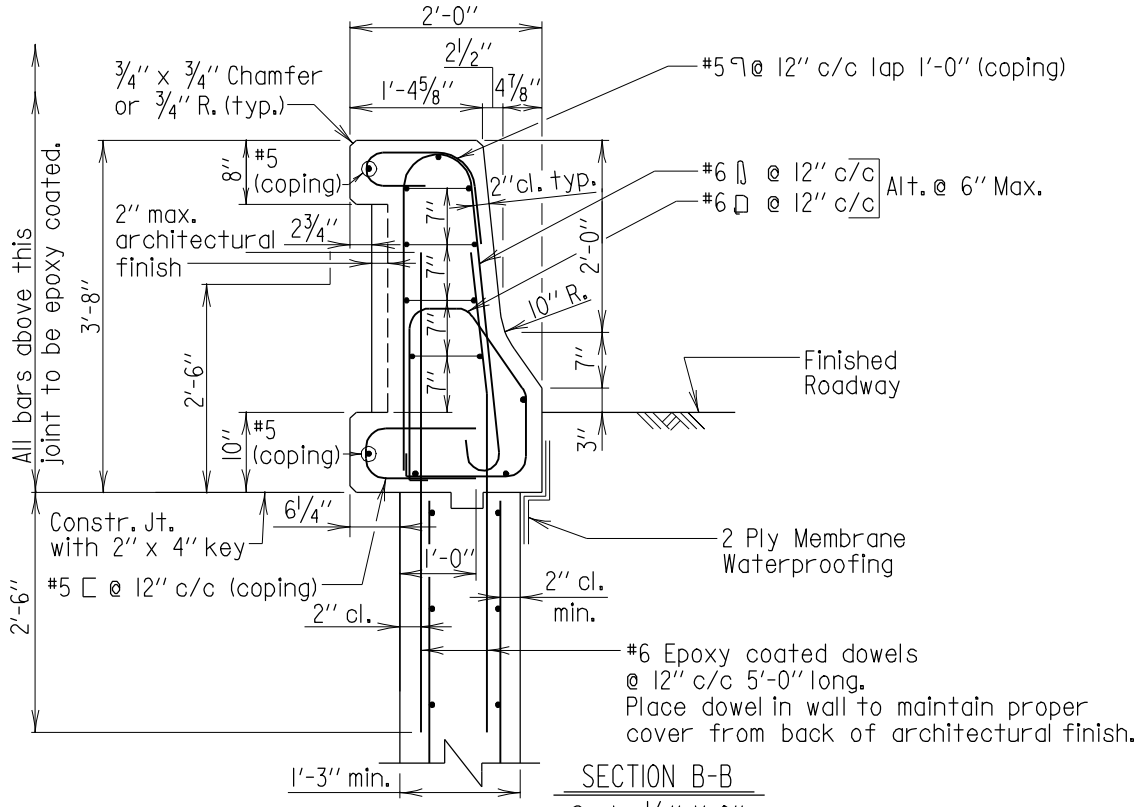

SECTION B-B

Scale: 1/2"=1'-0"

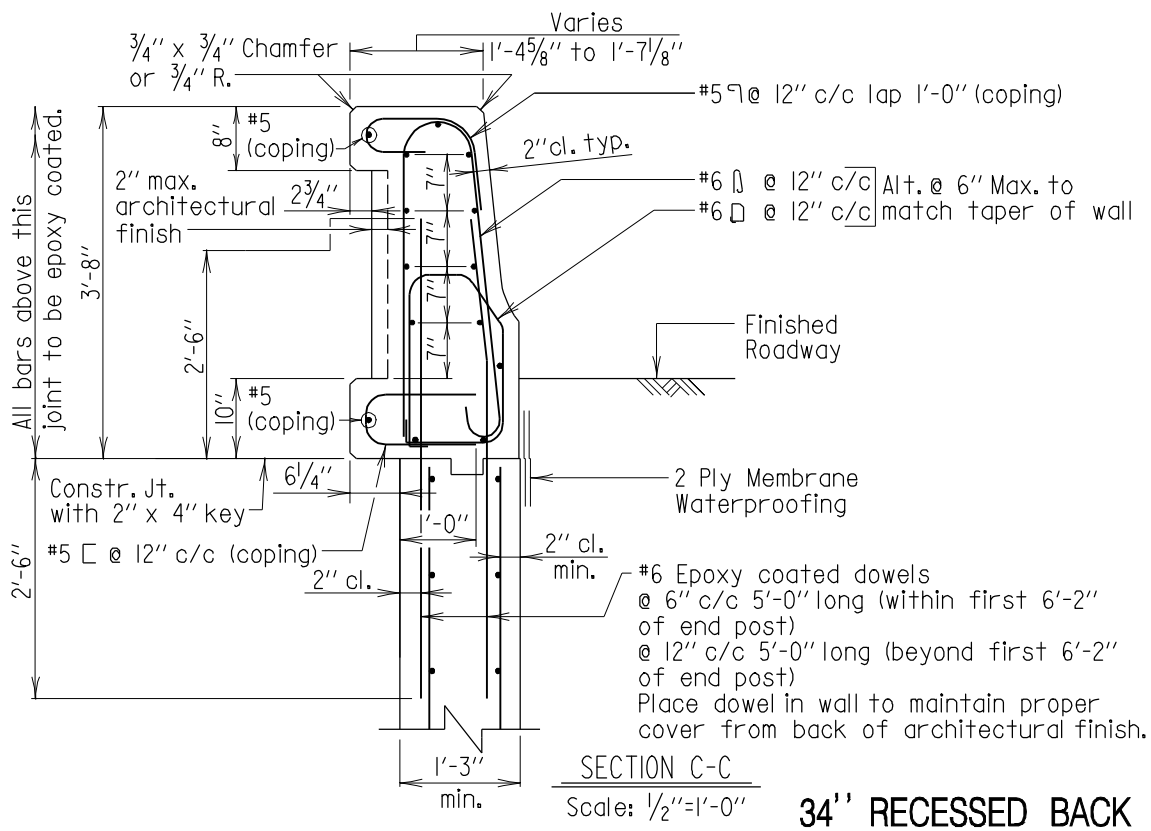

SECTION C-C

Scale: 1/2"=1'-0"

34" RECESSED BACK

Note:
All longitudinal bars are
#5's spaced as shown.

APPROVAL	
R.S. Freedman DIRECTOR OFFICE OF BRIDGE DEVEL. DATE: 6/1/05	
REVISIONS	
SHA	FHWA
11-14-05	

FHWA APPROVAL
DATE:

STATE OF MARYLAND
DEPARTMENT OF TRANSPORTATION
STATE HIGHWAY ADMINISTRATION
OFFICE OF BRIDGE DEVELOPMENT

34" F-SHAPE PARAPET END POST WITHOUT
FENCING OR RAILING
APPROACH END, END POST LENGTH > 11'-2"

STANDARD NO. BR-SB(6.48)-05-363 SHEET 3 OF 4

SUBSTRUCTURE ABUT.

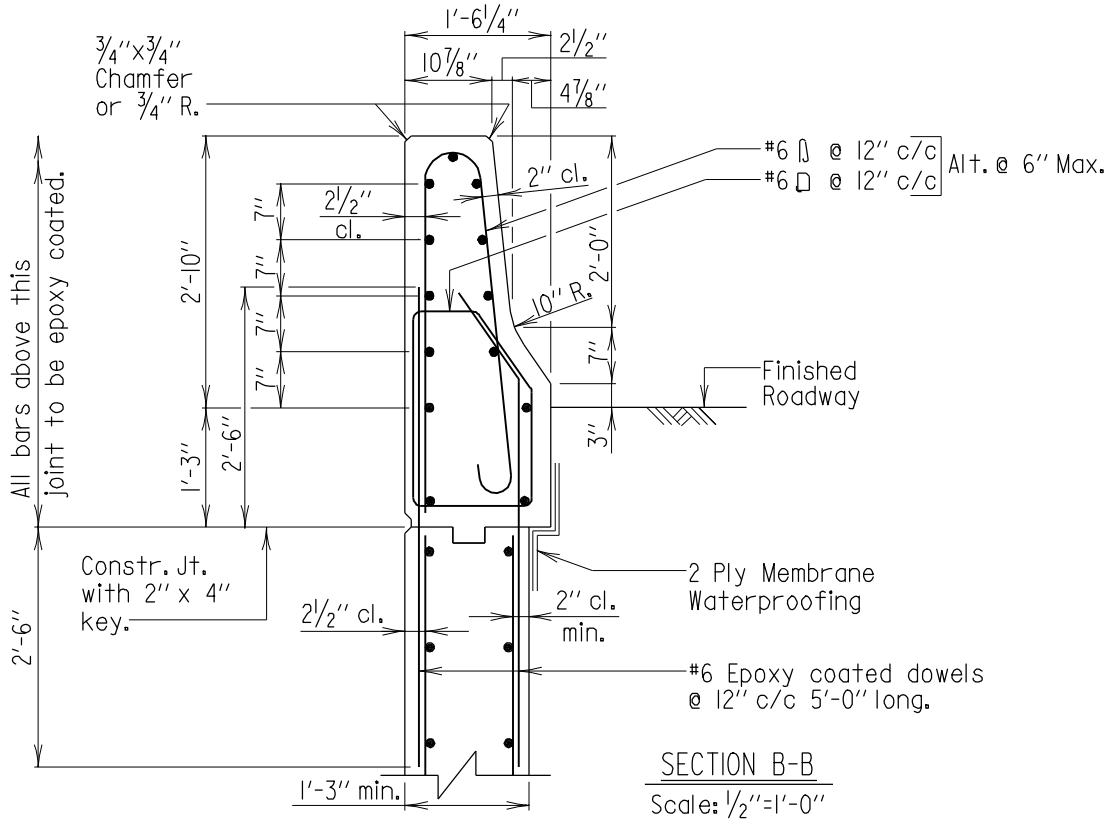

SECTION B-B

Scale: 1/2"=1'-0"

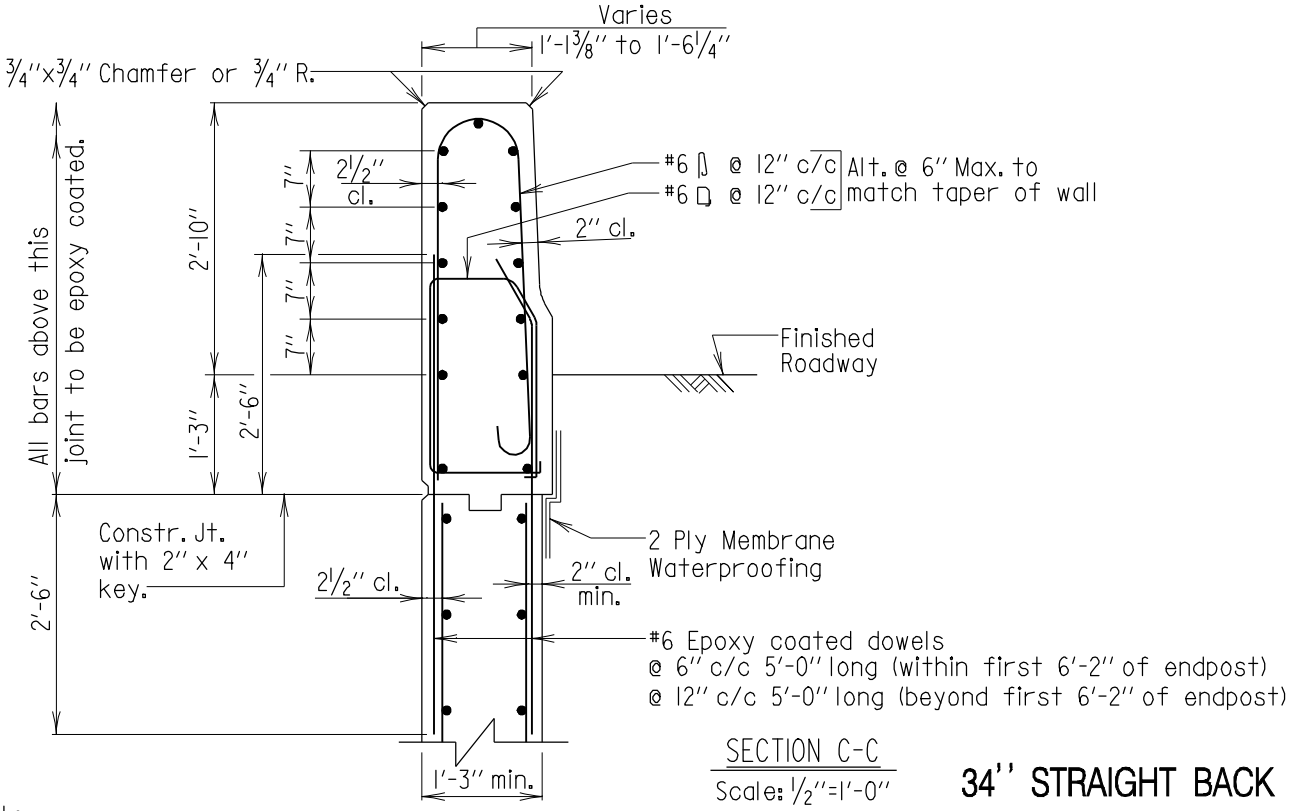

SECTION C-C

Scale: 1/2"=1'-0"

34" STRAIGHT BACK

Note:
All longitudinal bars are #5 spaced as shown.

APPROVAL	
DIRECTOR OFFICE OF BRIDGE DEVEL.	
DATE: 6/1/05	
REVISIONS	
SHA	FHWA
11-14-05	

FHWA APPROVAL
DATE:

STATE OF MARYLAND
DEPARTMENT OF TRANSPORTATION
STATE HIGHWAY ADMINISTRATION
OFFICE OF BRIDGE DEVELOPMENT

34" F-SHAPE PARAPET END POST WITHOUT FENCING OR RAILING
APPROACH END, END POST LENGTH > 11'-2"

STANDARD NO. BR-SB(6.48)-05-363

SHEET 3 OF 4

SUBSTRUCTURE ABUT.

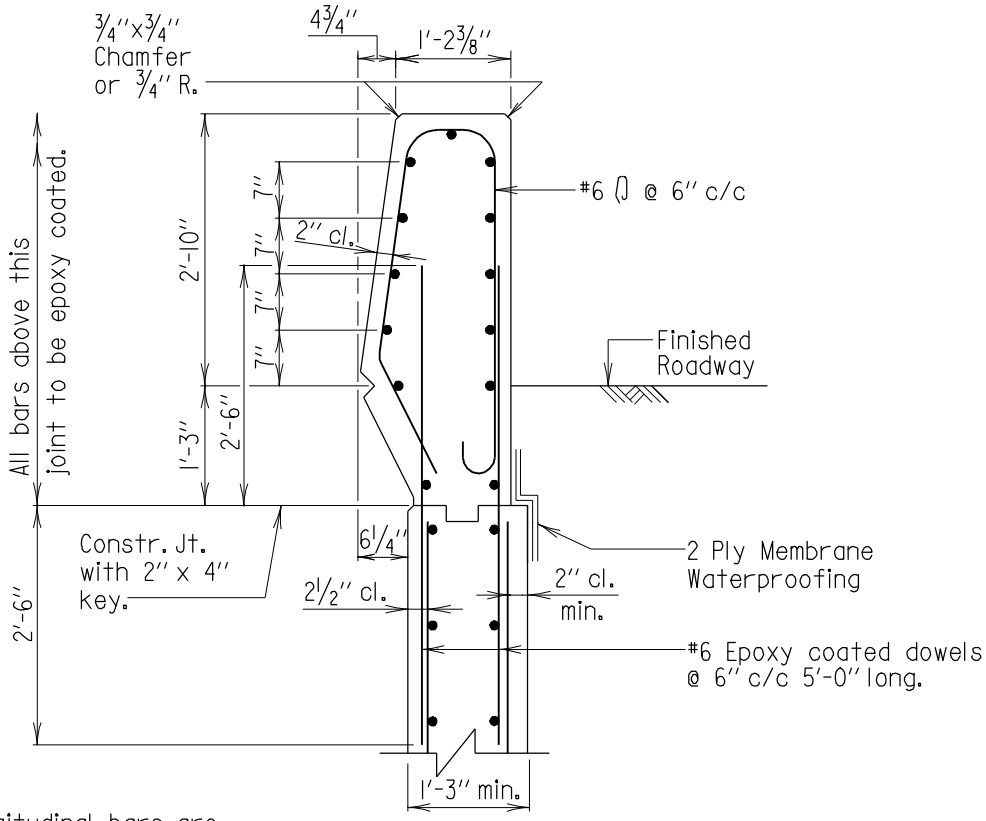

Note:
All longitudinal bars are #5 spaced as shown.

SECTION D-D
Scale: 1/2"=1'-0"

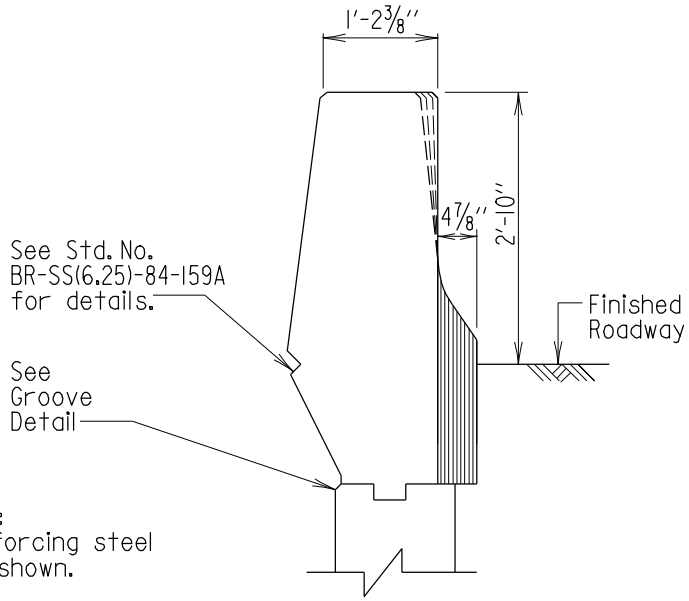

Note:
Reinforcing steel not shown.

VIEW E-E
Scale: 1/2"=1'-0"

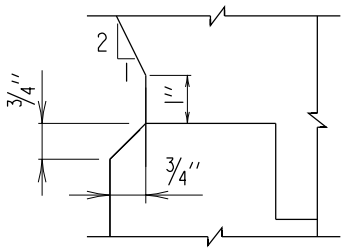

GROOVE DETAIL
Scale: 3"=1'-0"

34" DIAMOND BACK

APPROVAL	
R.S. Freedman DIRECTOR OFFICE OF BRIDGE DEVEL. DATE: 6/1/05	
REVISIONS	
SHA	FHWA
11-14-05	

FHWA APPROVAL
DATE:

STATE OF MARYLAND
DEPARTMENT OF TRANSPORTATION
STATE HIGHWAY ADMINISTRATION
OFFICE OF BRIDGE DEVELOPMENT

34" F-SHAPE PARAPET END POST WITHOUT FENCING OR RAILING
APPROACH END, END POST LENGTH > 11'-2"

STANDARD NO. BR-SB(6.48)-05-363 SHEET 4 OF 4

SUBSTRUCTURE ABUT.

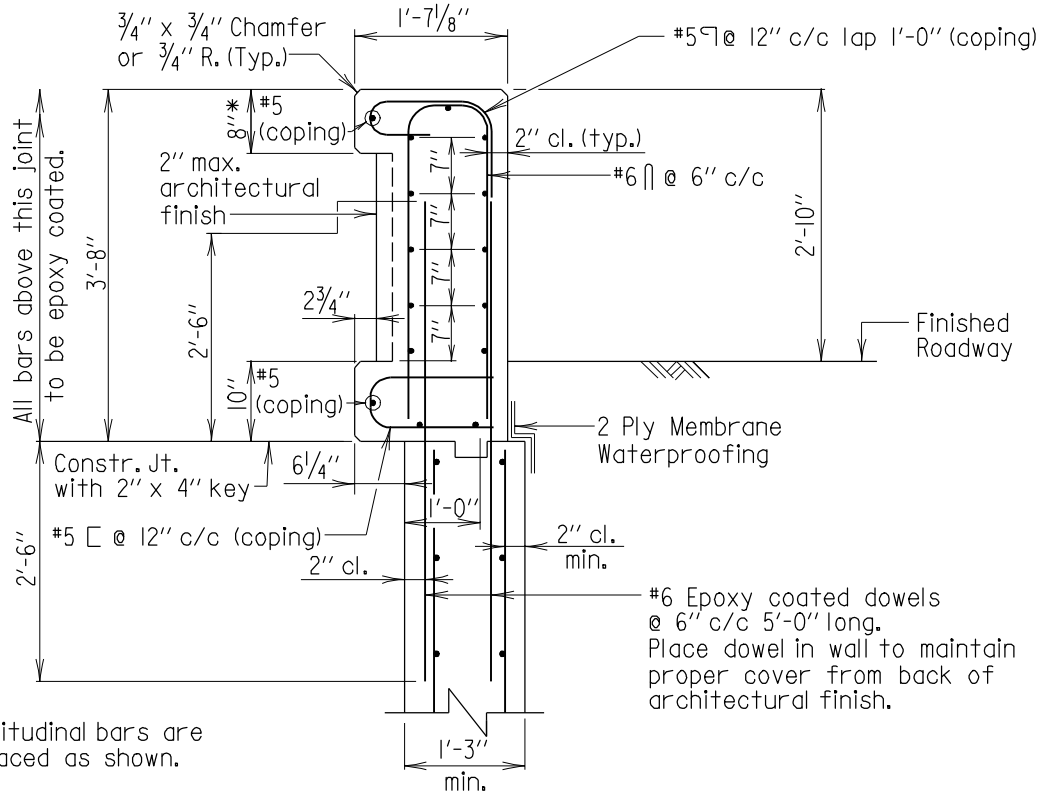

SECTION D-D

Scale: 1/2''=1'-0''

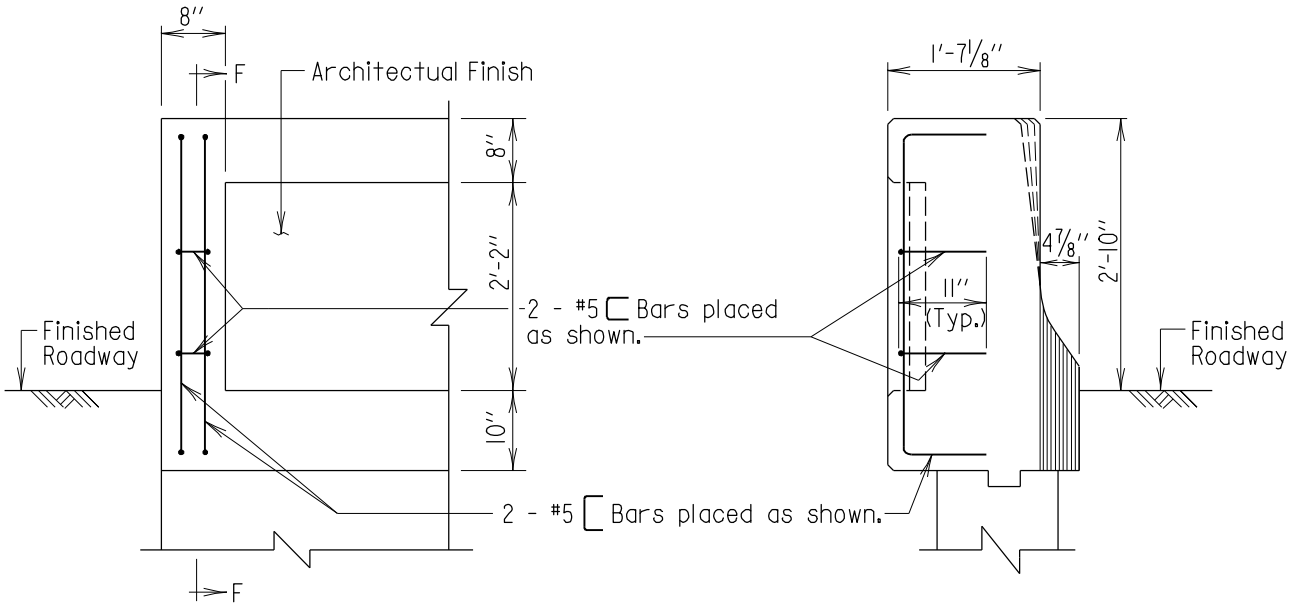

PARTIAL REAR ELEVATION

Scale: 1/2''=1'-0''

SECTION F-F

Scale: 1/2''=1'-0''

34'' RECESSED BACK

Note:
The 34'' Recessed Back Endpost does not contain a View E-E

APPROVAL	
R S Freedman DIRECTOR OFFICE OF BRIDGE DEVEL. DATE: 6/1/05	
REVISIONS	
SHA	FHWA
11-14-05	

FHWA APPROVAL
DATE:

STATE OF MARYLAND
DEPARTMENT OF TRANSPORTATION
STATE HIGHWAY ADMINISTRATION
OFFICE OF BRIDGE DEVELOPMENT

34'' F-SHAPE PARAPET END POST WITHOUT FENCING OR RAILING
APPROACH END, END POST LENGTH > 11'-2''

STANDARD NO. BR-SB(6.48)-05-363 SHEET 4 OF 4

SUBSTRUCTURE ABUT.

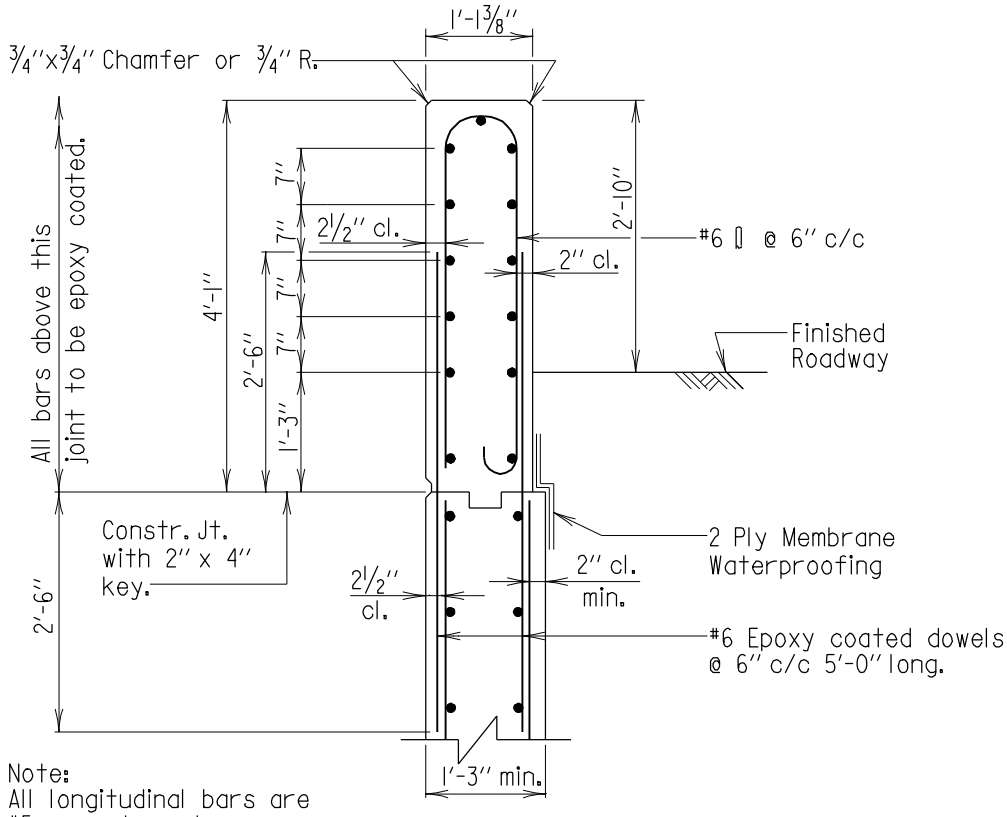

Note:
All longitudinal bars are #5 spaced as shown.

SECTION D-D
Scale: 1/2"=1'-0"

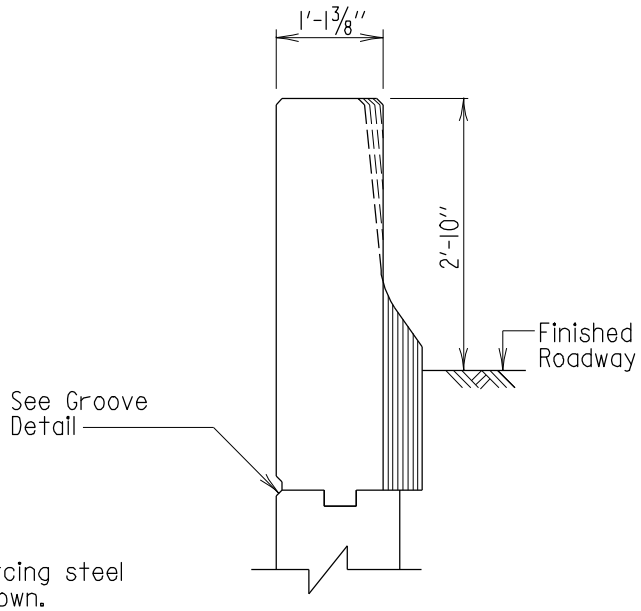

Note:
Reinforcing steel not shown.

VIEW E-E
Scale: 1/2"=1'-0"

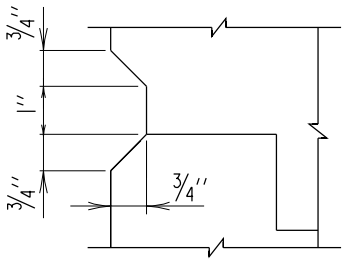

GROOVE DETAIL
Scale: 3"=1'-0"

34" STRAIGHT BACK

APPROVAL	
R.S. Freedman DIRECTOR OFFICE OF BRIDGE DEVEL. DATE: 6/1/05	
REVISIONS	
SHA	FHWA
11-14-05	·
·	·
·	·
·	·

FHWA APPROVAL
DATE:

STATE OF MARYLAND
DEPARTMENT OF TRANSPORTATION
STATE HIGHWAY ADMINISTRATION
OFFICE OF BRIDGE DEVELOPMENT

34" F-SHAPE PARAPET END POST WITHOUT FENCING OR RAILING
APPROACH END, END POST LENGTH > 11'-2"

STANDARD NO. BR-SB(6.48)-05-363 SHEET 4 OF 4

SUBSTRUCTURE ABUT.

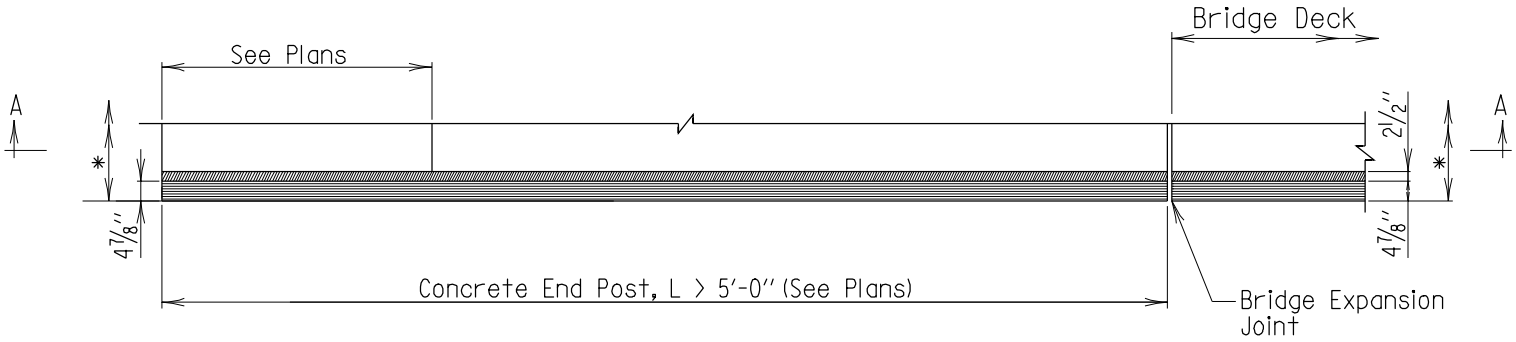

PLAN

Scale: 1/4''=1'-0''

*For overall Parapet dimensions, see sheets 3 and 4 of 4.

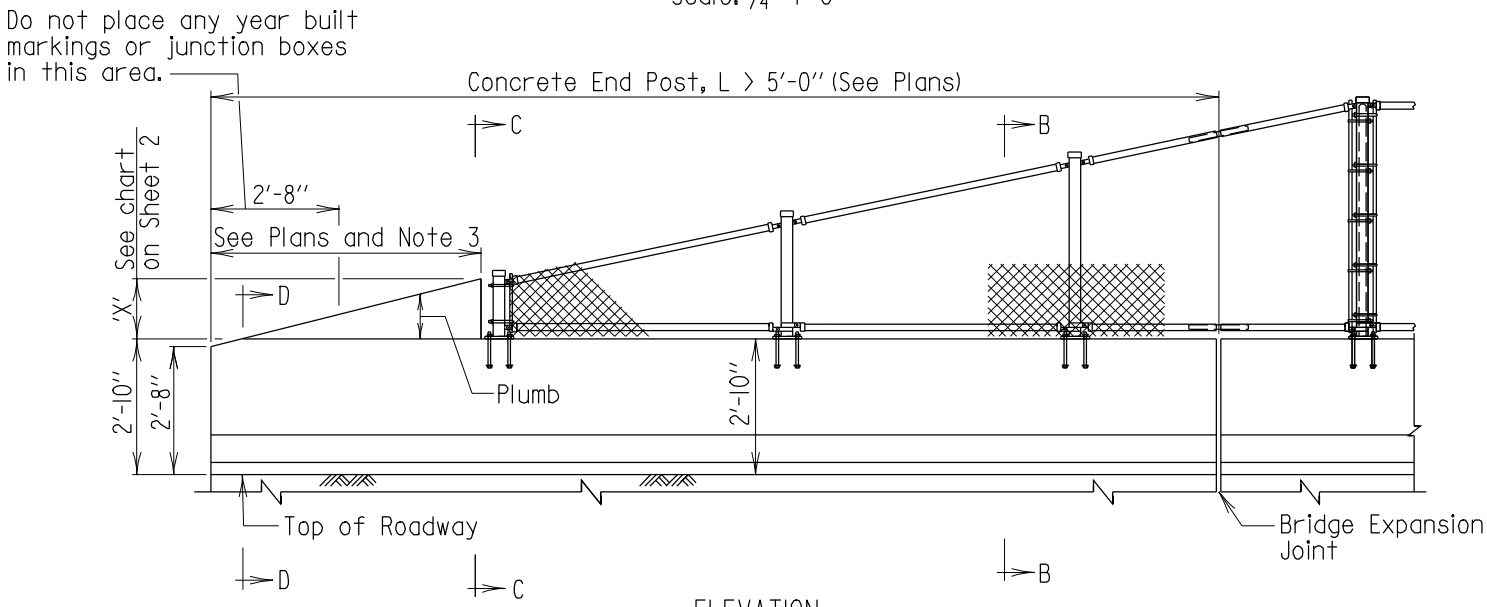

ELEVATION

Scale: 1/4''=1'-0''

Notes:

1. W-Beam Traffic Barrier not shown.
2. Type II fence shown, see Plans for fence or railing layout and details.
3. Taper barrier height to 2'-8'' when Thrie Beam is required. Taper barrier height to 2'-10'' when adjacent to concrete F-Shape barrier.

Note to Designer:

This standard contains details for straight back, diamond back and recessed back parapets. Include the appropriate shape in the Contract Plans.

FHWA APPROVAL
DATE:

APPROVAL
DIRECTOR
OFFICE OF BRIDGE DEVEL.
DATE: 6/1/05

REVISIONS
SHA
FHWA

STATE OF MARYLAND
DEPARTMENT OF TRANSPORTATION
STATE HIGHWAY ADMINISTRATION
OFFICE OF BRIDGE DEVELOPMENT

34'' F-SHAPE PARAPET END POST WITH FENCING OR RAILING TRAIL END

STANDARD NO. BR-SB(6.49)-05-364

SHEET 1 OF 4

SUBSTRUCTURE ABUT.

'X'	Fence or Railing Type
1'-0''	One Strand Railing
1'-3''	Type II Fence
1'-9''	Two Strand Railing

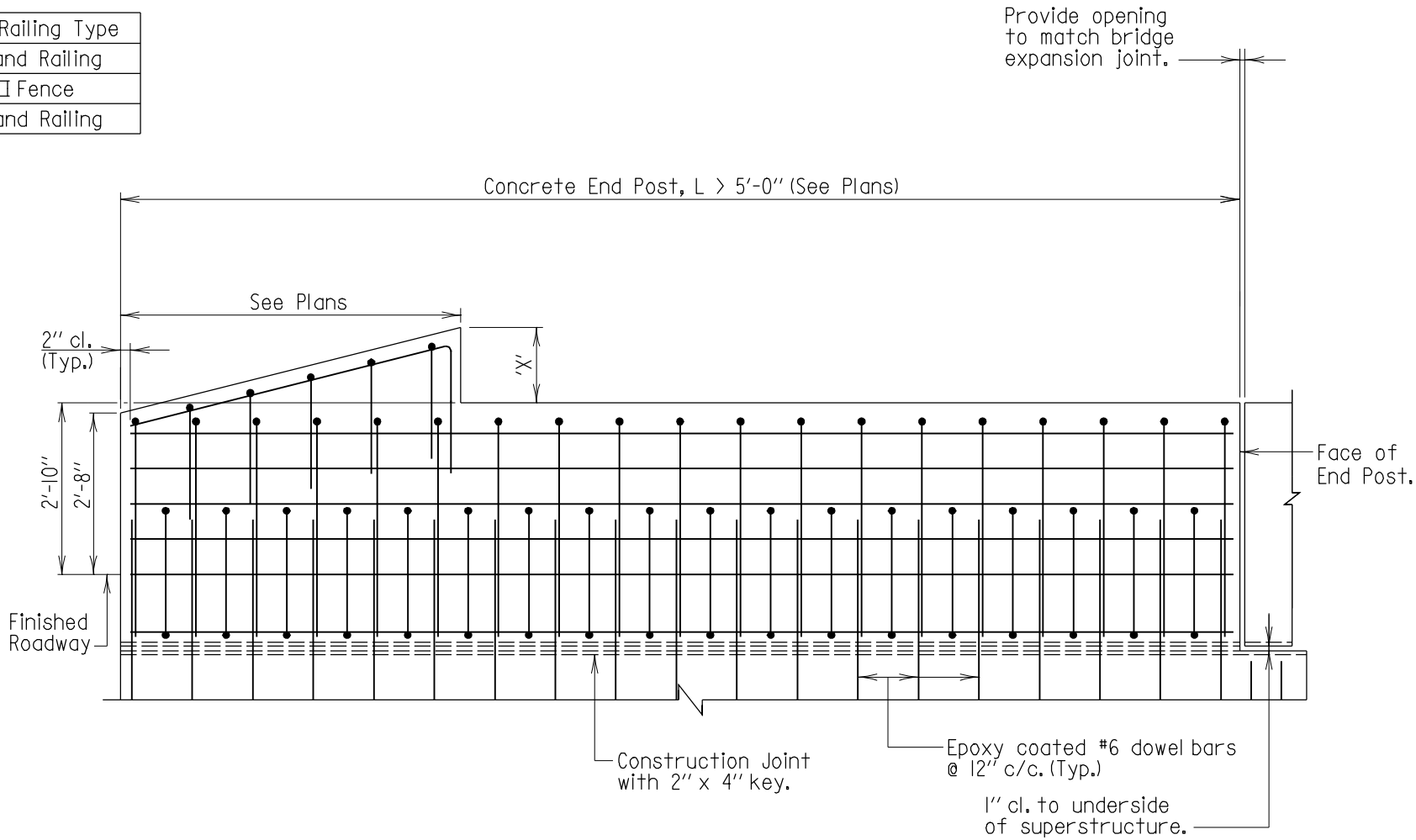

SECTION A-A

Scale: 3/8''=1'-0''

Notes:
1. For Parapet Reinforcing Details, see sheets 3 and 4.
2. Fencing or Railing not shown.
3. If applicable, reinforcing for coping not shown.

Note to Designer:
This standard contains details for straight back, diamond back and recessed back parapets. Include the appropriate shape in the Contract Plans.

APPROVAL
DIRECTOR OFFICE OF BRIDGE DEVEL.
DATE: 6/1/05

REVISIONS
SHA 11-14-05
FHWA

FHWA APPROVAL
DATE:

STATE OF MARYLAND
DEPARTMENT OF TRANSPORTATION
STATE HIGHWAY ADMINISTRATION
OFFICE OF BRIDGE DEVELOPMENT

34'' F-SHAPE PARAPET END POST WITH FENCING OR RAILING TRAIL END

STANDARD NO. BR-SB(6.49)-05-364

SHEET 2 OF 4

SUBSTRUCTURE ABUT.

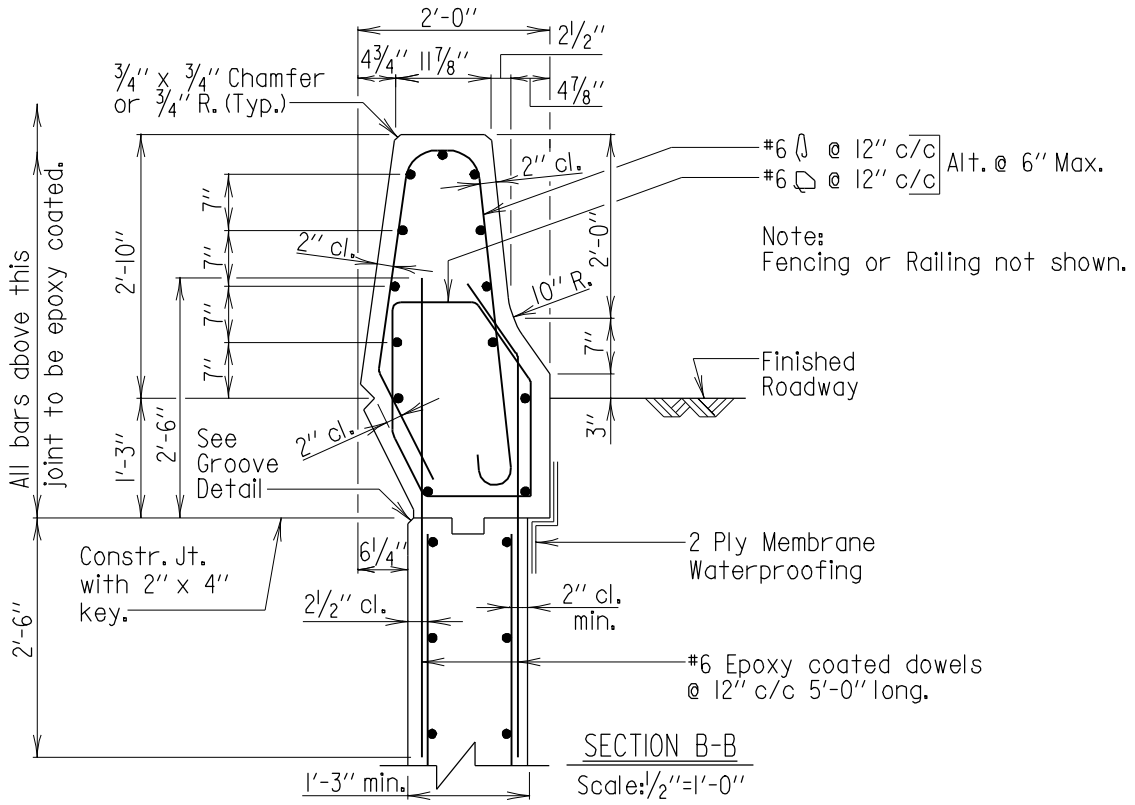

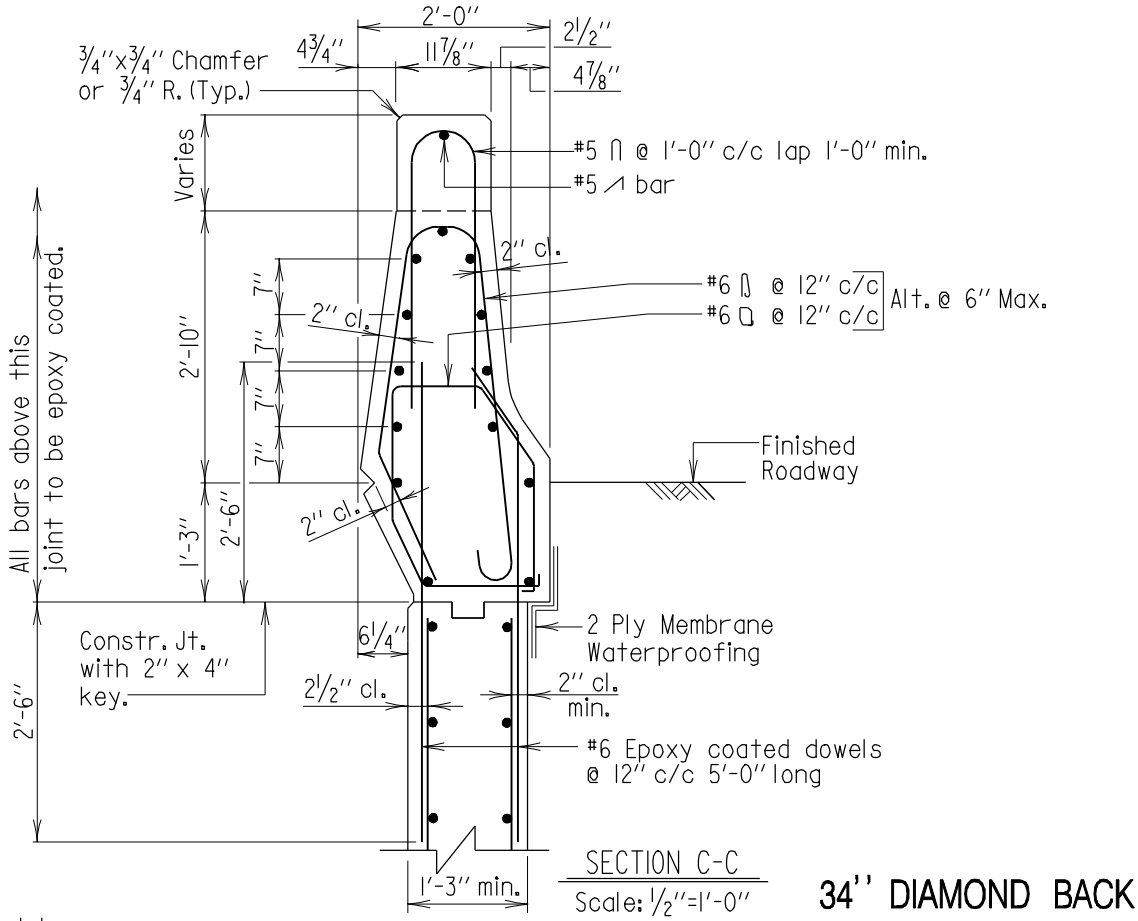

34" DIAMOND BACK

Note:
All longitudinal bars are #5 spaced as shown.

APPROVAL	
R S Freedman DIRECTOR OFFICE OF BRIDGE DEVEL. DATE: 6/1/05	
REVISIONS	
SHA	FHWA
11-14-05	

FHWA APPROVAL
DATE:

STATE OF MARYLAND
DEPARTMENT OF TRANSPORTATION
STATE HIGHWAY ADMINISTRATION
OFFICE OF BRIDGE DEVELOPMENT

34" F-SHAPE PARAPET END POST WITH FENCING OR RAILING TRAIL END

STANDARD NO. BR-SB(6.49)-05-364 SHEET 3 OF 4

SUBSTRUCTURE ABUT.

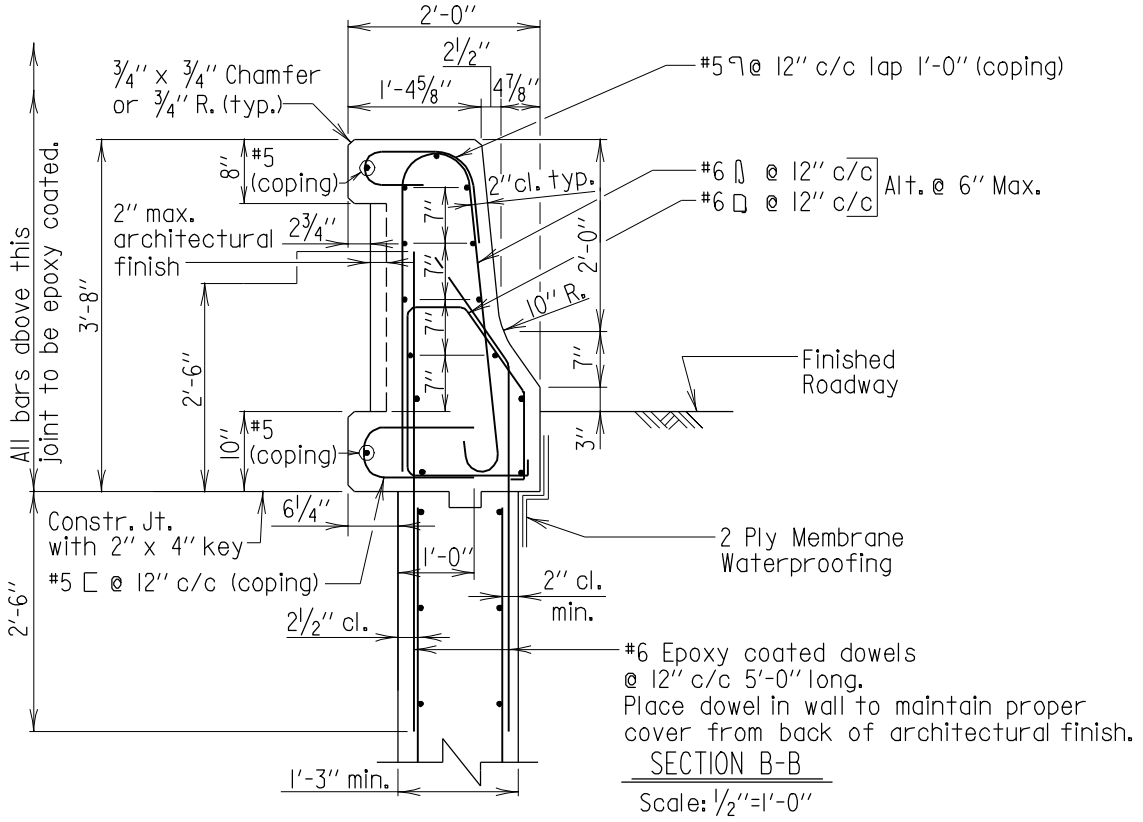

SECTION B-B

Scale: 1/2"=1'-0"

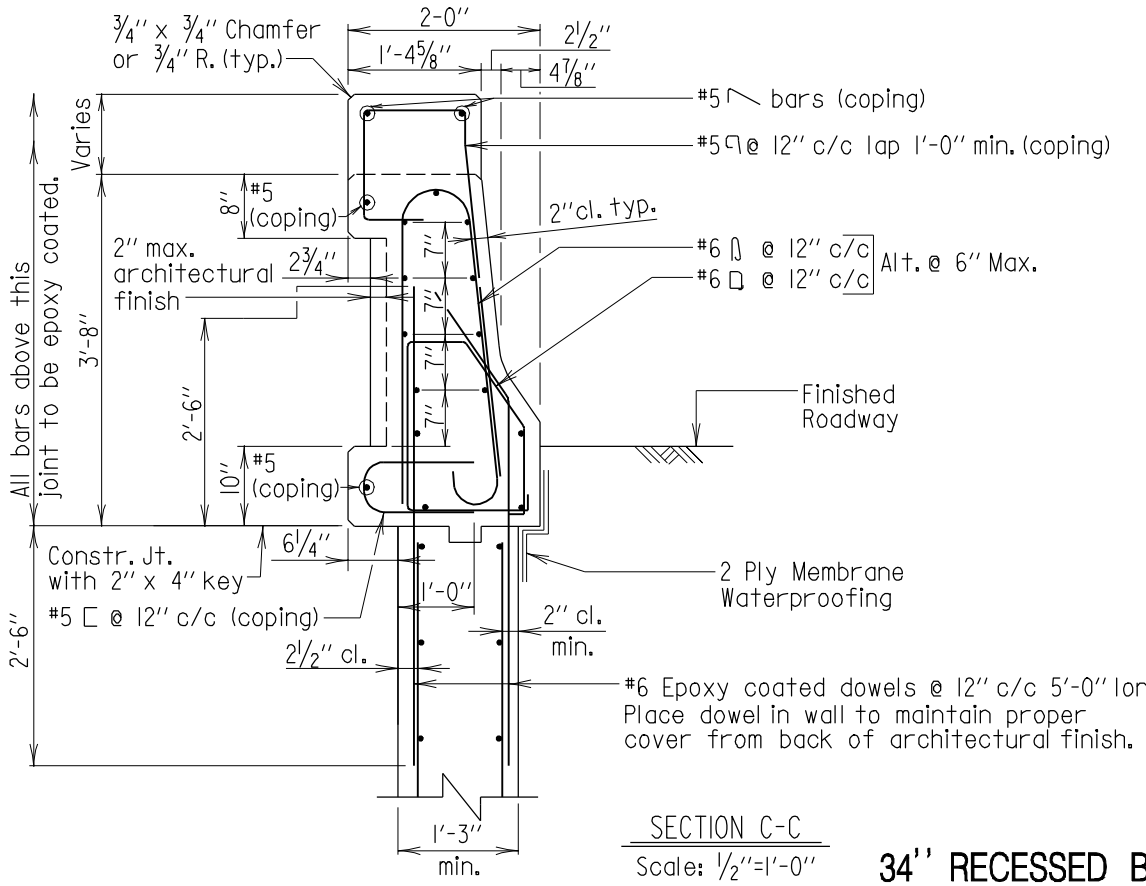

SECTION C-C

Scale: 1/2"=1'-0"

34" RECESSED BACK

Note:
All longitudinal bars are #5's placed as shown.

APPROVAL	
DIRECTOR OFFICE OF BRIDGE DEVEL. DATE: 6/1/05	
REVISIONS	
SHA	FHWA
11-14-05	

FHWA APPROVAL
DATE:

STATE OF MARYLAND
DEPARTMENT OF TRANSPORTATION
STATE HIGHWAY ADMINISTRATION
OFFICE OF BRIDGE DEVELOPMENT

34" F-SHAPE PARAPET END POST WITH FENCING OR RAILING TRAIL END

STANDARD NO. BR-SB(6.49)-05-364

SHEET 3 OF 4

SUBSTRUCTURE ABUT.

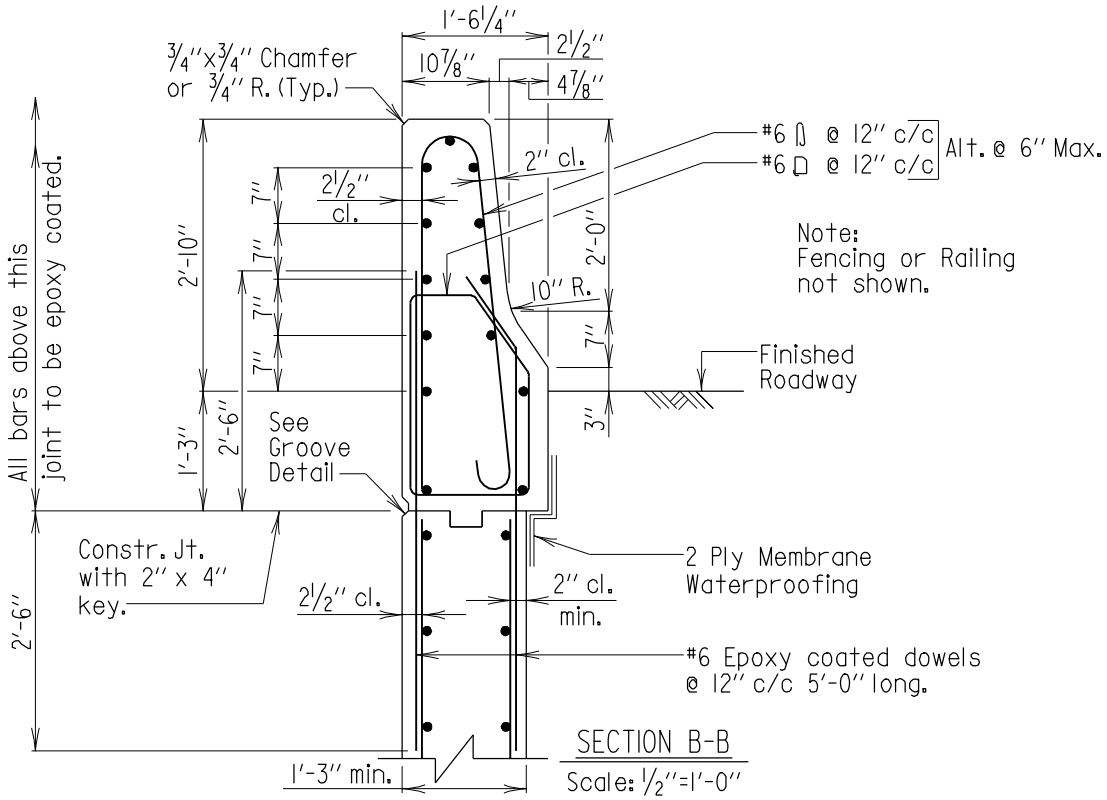

SECTION B-B

Scale: 1/2"=1'-0"

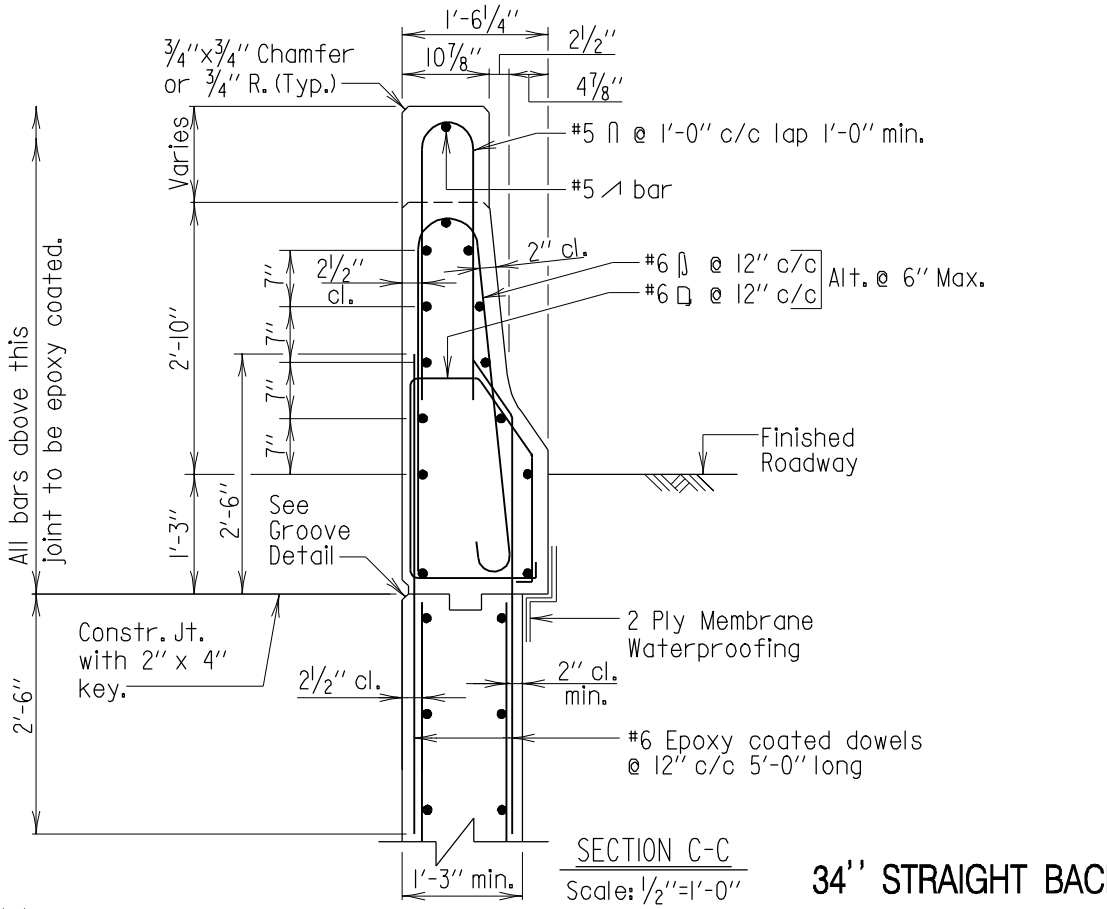

SECTION C-C

Scale: 1/2"=1'-0"

34" STRAIGHT BACK

Note:
All longitudinal bars are #5 spaced as shown.

APPROVAL	
R S Friedman DIRECTOR OFFICE OF BRIDGE DEVEL. DATE: 6/1/05	
REVISIONS	
SHA	FHWA
11-14-05	

FHWA APPROVAL
DATE:

STATE OF MARYLAND
DEPARTMENT OF TRANSPORTATION
STATE HIGHWAY ADMINISTRATION
OFFICE OF BRIDGE DEVELOPMENT

34" F-SHAPE PARAPET END POST WITH FENCING OR RAILING TRAIL END

STANDARD NO. BR-SB(6.49)-05-364 SHEET 3 OF 4

SUBSTRUCTURE ABUT.

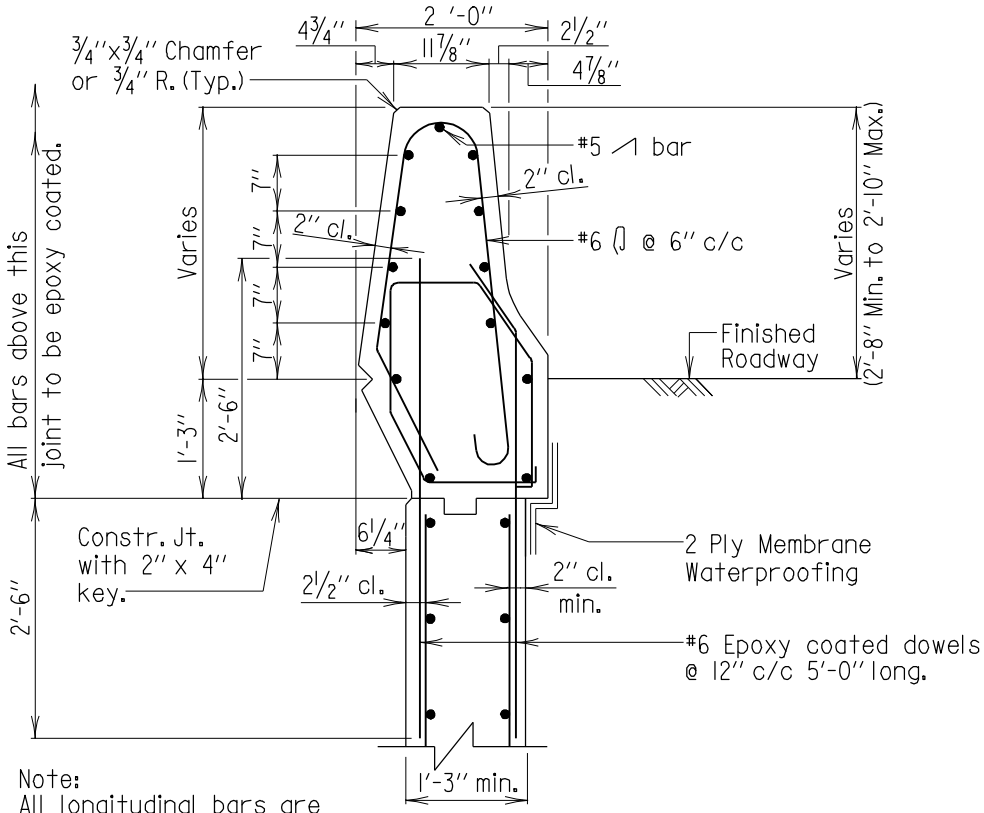

Note:
All longitudinal bars are
#5 spaced as shown.

SECTION D-D

Scale: 1/2"=1'-0"

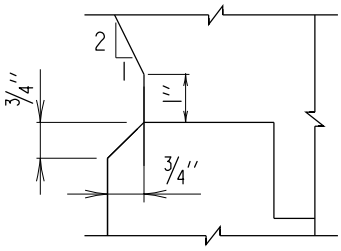

GROOVE DETAIL

Scale: 3"=1'-0"

Note:
All longitudinal bars are
#5 spaced as shown.

34" DIAMOND BACK

APPROVAL	
R.S. Freedman DIRECTOR OFFICE OF BRIDGE DEVEL. DATE: 6/1/05	
REVISIONS	
SHA	FHWA
11-14-05	·
·	·
·	·
·	·

FHWA APPROVAL
DATE: .

STATE OF MARYLAND
DEPARTMENT OF TRANSPORTATION
STATE HIGHWAY ADMINISTRATION
OFFICE OF BRIDGE DEVELOPMENT

34" F-SHAPE PARAPET END POST WITH FENCING OR RAILING TRAIL END

STANDARD NO. BR-SB(6.49)-05-364 SHEET 4 OF 4

SUBSTRUCTURE ABUT.

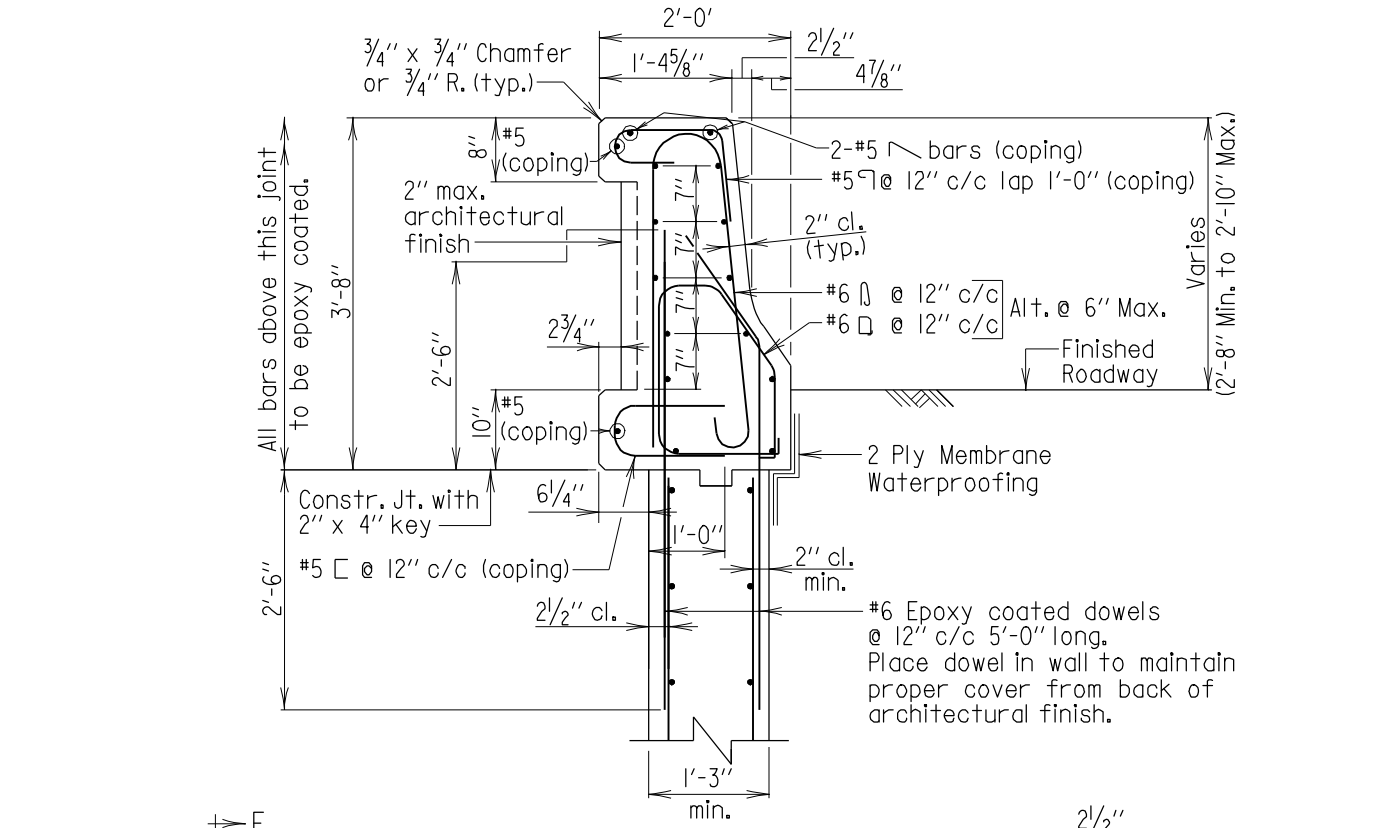

SECTION D-D

Scale: 1/2''=1'-0''

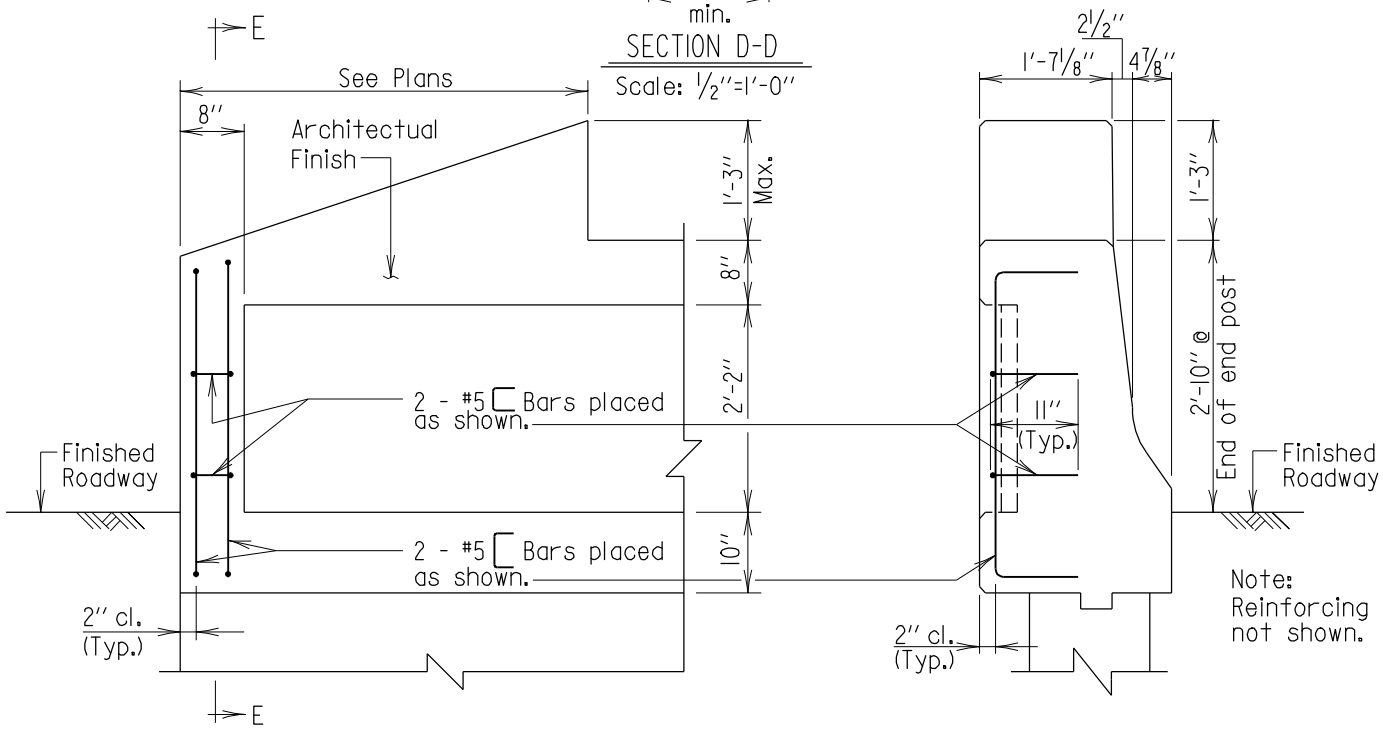

PARTIAL REAR ELEVATION

Scale: 1/2''=1'-0''

SECTION E-E

Scale: 1/2''=1'-0''

34'' RECESSED BACK

Note:
All longitudinal bars are #5's placed as shown.

APPROVAL	
DIRECTOR OFFICE OF BRIDGE DEVEL. DATE: 6/1/05	
REVISIONS	
SHA	FHWA
11-14-05	

FHWA APPROVAL
DATE:

STATE OF MARYLAND
DEPARTMENT OF TRANSPORTATION
STATE HIGHWAY ADMINISTRATION
OFFICE OF BRIDGE DEVELOPMENT

34'' F-SHAPE PARAPET END POST WITH FENCING OR RAILING TRAIL END

STANDARD NO. BR-SB(6.49)-05-364 SHEET 4 OF 4

SUBSTRUCTURE ABUT.

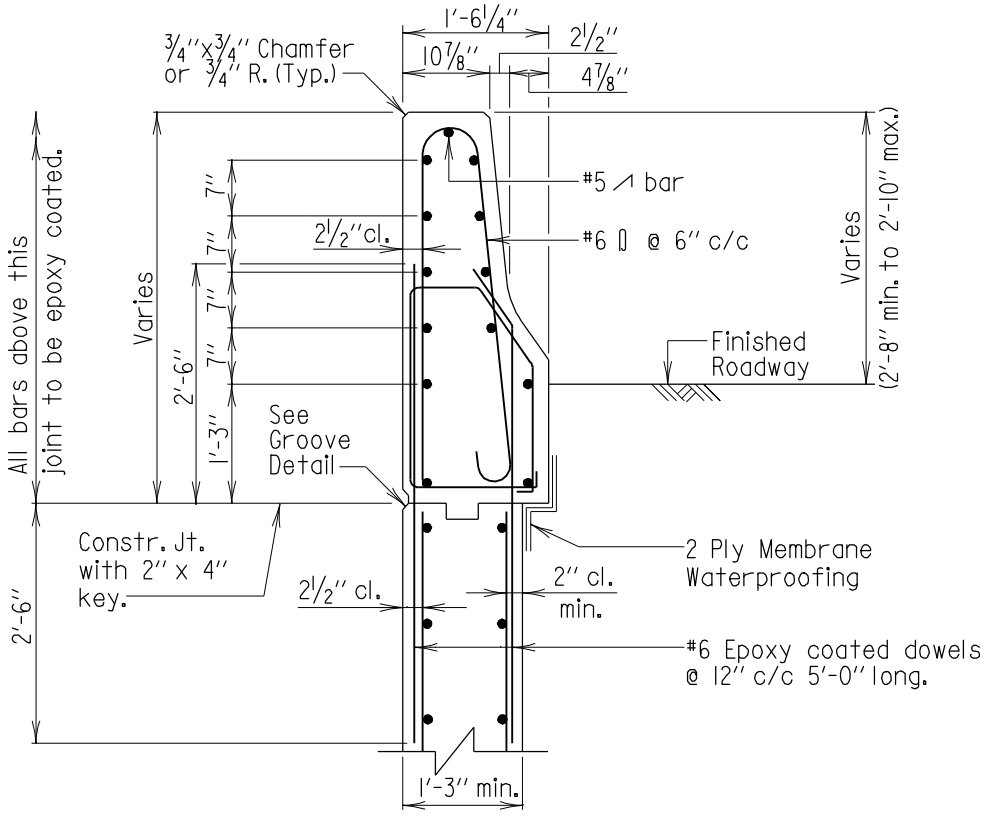

SECTION D-D

Scale: 1/2"=1'-0"

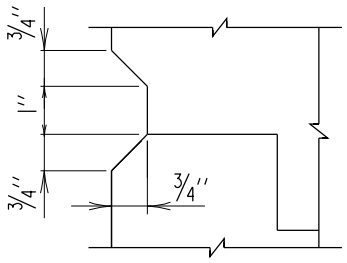

GROOVE DETAIL

Scale: 3"=1'-0"

Note:
All longitudinal bars are
#5 spaced as shown.

34" STRAIGHT BACK

APPROVAL	
DIRECTOR OFFICE OF BRIDGE DEVEL.	
DATE: 6/1/05	
REVISIONS	
SHA	FHWA
11-14-05	

FHWA APPROVAL
DATE:

STATE OF MARYLAND
DEPARTMENT OF TRANSPORTATION
STATE HIGHWAY ADMINISTRATION
OFFICE OF BRIDGE DEVELOPMENT

34" F-SHAPE PARAPET END POST WITH FENCING OR RAILING TRAIL END

STANDARD NO. BR-SB(6.49)-05-364 SHEET 4 OF 4

SUBSTRUCTURE ABUT.

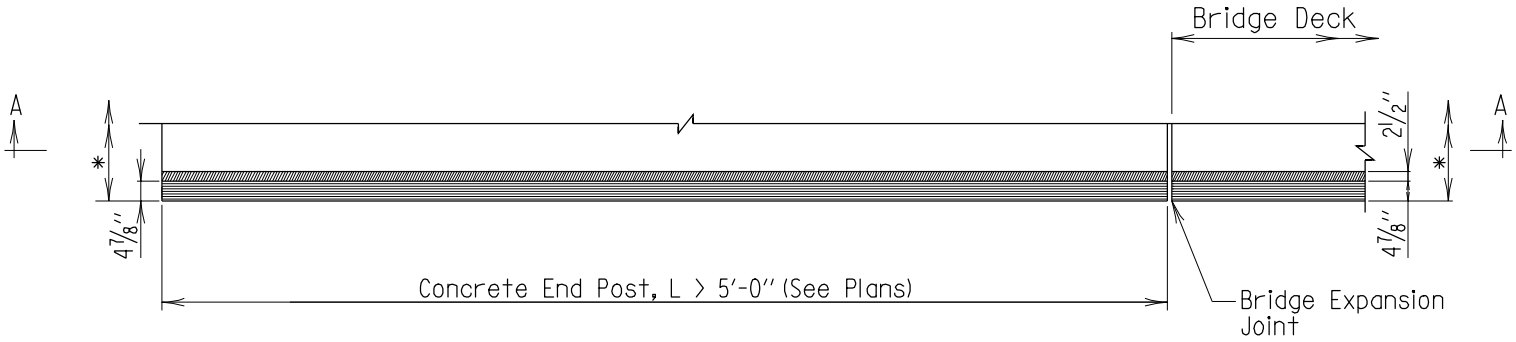

PLAN

Scale: $\frac{1}{4}''=1'-0''$

* For overall Parapet dimensions, see sheet 3 of 3.

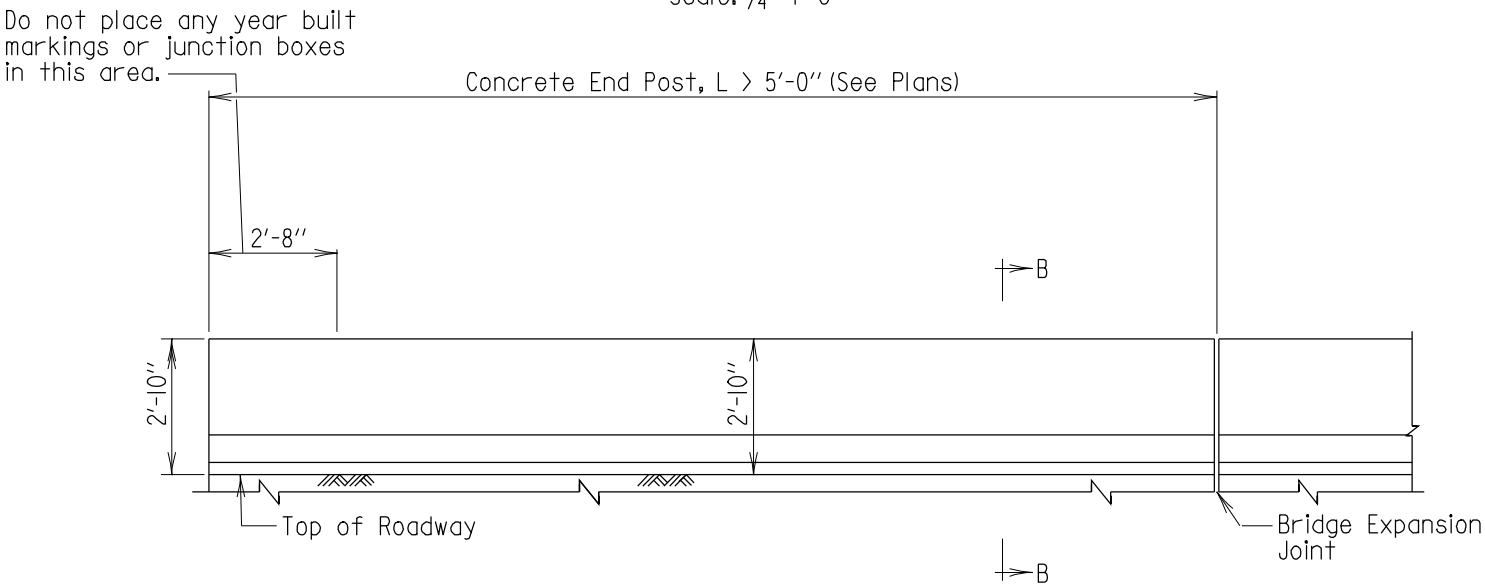

ELEVATION

Scale: $\frac{1}{4}''=1'-0''$

Notes:
1. Use on the trail end of bridges without fencing or railing.
2. W-Beam Traffic Barrier not shown.

Note to Designer:
This standard contains details for straight back, diamond back and recessed back parapets. Include the appropriate shape in the Contract Plans.

APPROVAL
DIRECTOR
OFFICE OF BRIDGE DEVEL.
DATE: 6/1/05

REVISIONS
SHA
FHWA

FHWA APPROVAL
DATE:

STATE OF MARYLAND
DEPARTMENT OF TRANSPORTATION
STATE HIGHWAY ADMINISTRATION
OFFICE OF BRIDGE DEVELOPMENT

34" F-SHAPE PARAPET END POST WITHOUT FENCING OR RAILING TRAIL END

STANDARD NO. BR-SB(6.50)-05-365

SHEET 1 OF 3

SUBSTRUCTURE ABUT.

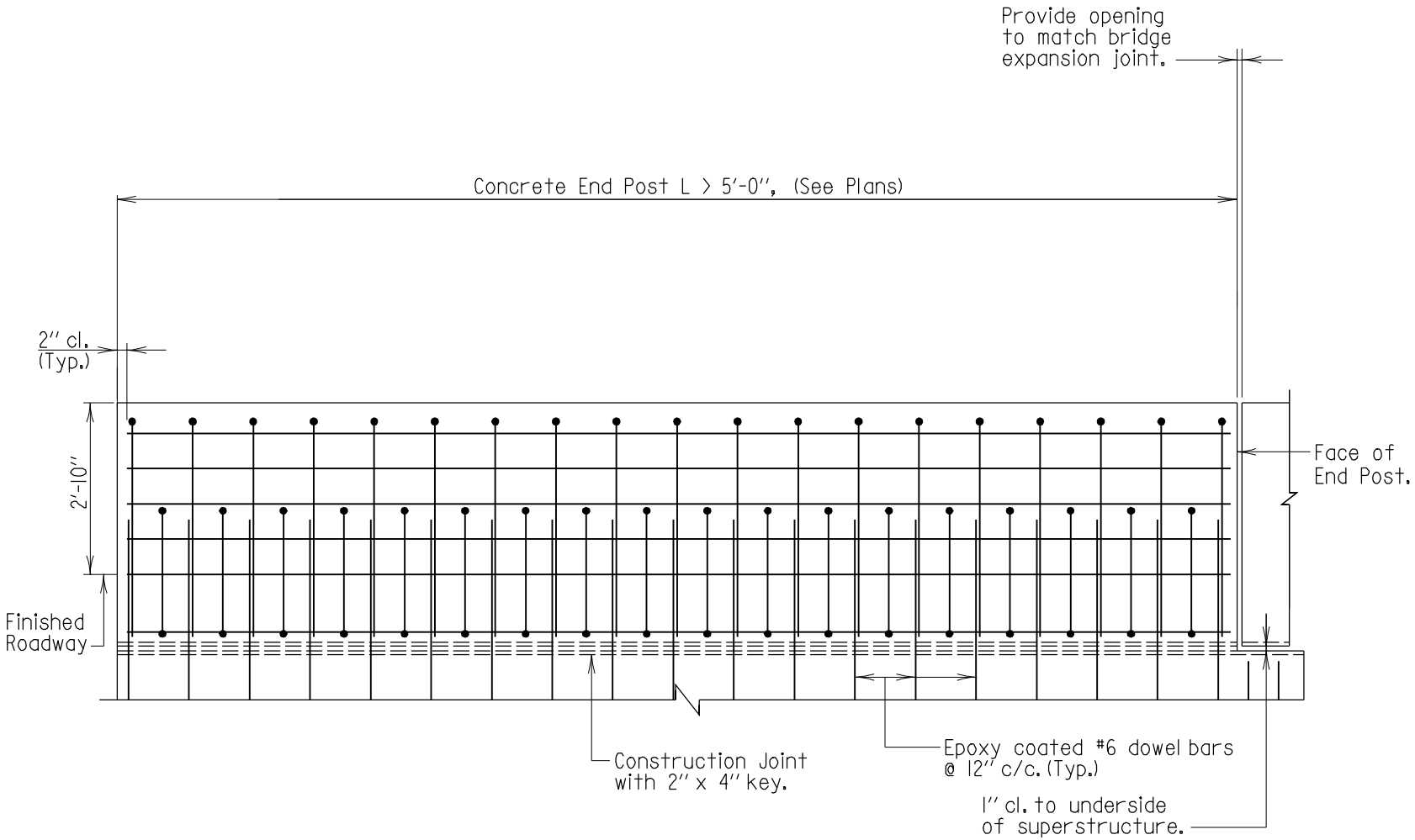

SECTION A-A

Scale: 3/8"=1'-0"

Notes:
1. For Parapet Reinforcing Details, see sheet 3.
2. If applicable, reinforcing for coping not shown.

Note to Designer:
This standard contains details for straight back, diamond back and recessed back parapets. Include the appropriate shape in the Contract Plans.

APPROVAL	
DIRECTOR OFFICE OF BRIDGE DEVEL.	
DATE: 6/1/05	
REVISIONS	
SHA	FHWA
11-14-05	

FHWA APPROVAL
DATE:

STATE OF MARYLAND
DEPARTMENT OF TRANSPORTATION
STATE HIGHWAY ADMINISTRATION
OFFICE OF BRIDGE DEVELOPMENT

34" F-SHAPE PARAPET END POST WITHOUT FENCING OR RAILING TRAIL END

STANDARD NO. BR-SB(6.50)-05-365

SHEET 2 OF 3

SUBSTRUCTURE ABUT.

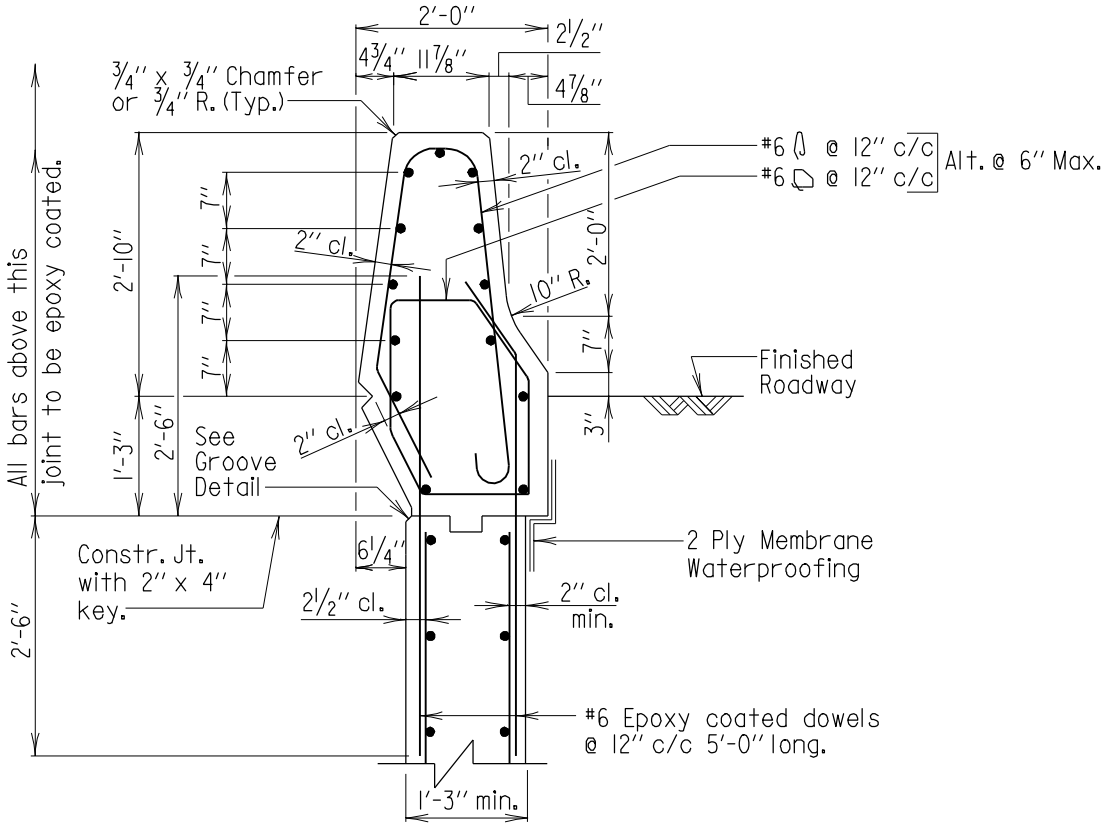

SECTION B-B

Scale: 1/2"=1'-0"

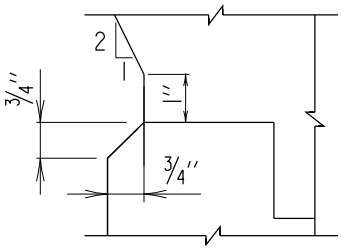

GROOVE DETAIL

Scale: 3"=1'-0"

Note:
All longitudinal bars are
#5 spaced as shown.

34" DIAMOND BACK

APPROVAL	
DIRECTOR OFFICE OF BRIDGE DEVEL. DATE: 6/1/05	
REVISIONS	
SHA	FHWA
11-14-05	

FHWA APPROVAL
DATE:

STATE OF MARYLAND
DEPARTMENT OF TRANSPORTATION
STATE HIGHWAY ADMINISTRATION
OFFICE OF BRIDGE DEVELOPMENT

34" F-SHAPE PARAPET END POST WITHOUT FENCING OR RAILING TRAIL END

STANDARD NO. BR-SB(6.50)-05-365 SHEET 3 OF 3

SUBSTRUCTURE ABUT.

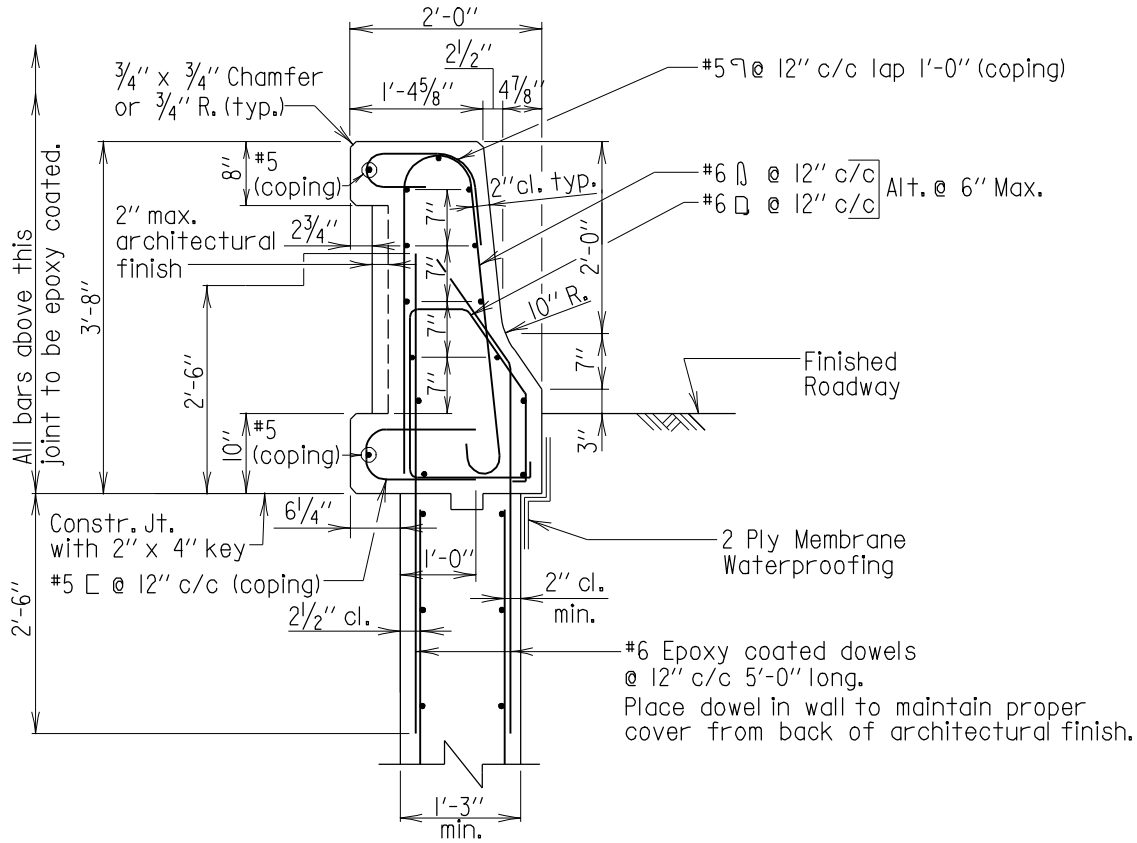

SECTION B-B

Scale: 1/2"=1'-0"

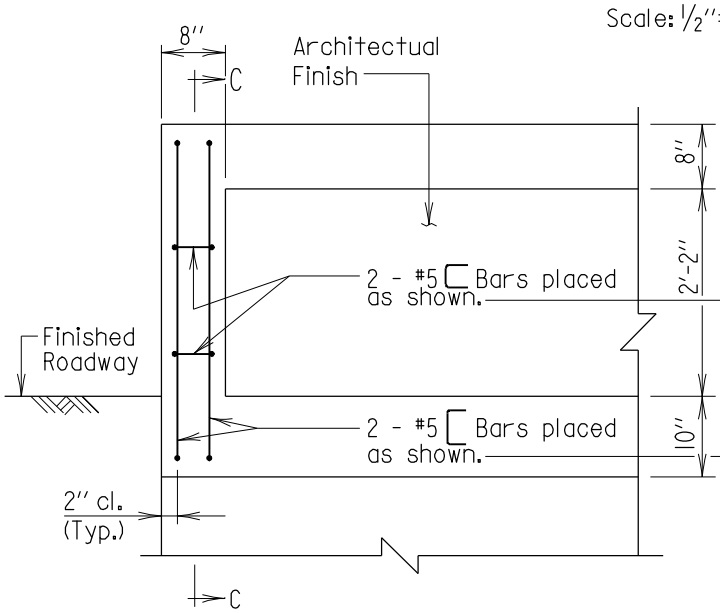

PARTIAL REAR ELEVATION

Scale: 1/2"=1'-0"

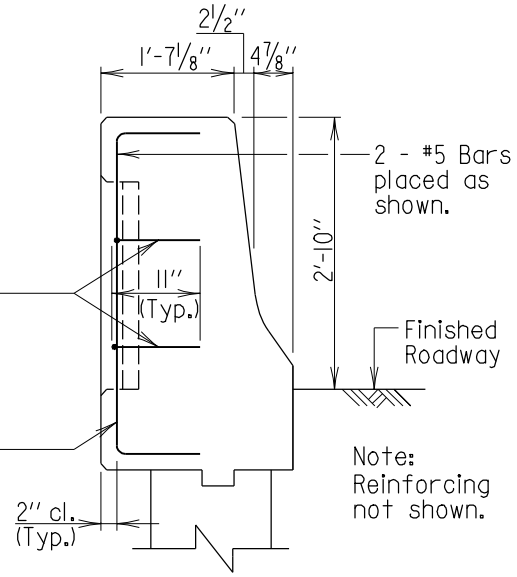

SECTION C-C

Scale: 1/2"=1'-0"

34" RECESSED BACK

Note:
All longitudinal bars are #5's placed as shown.

APPROVAL	
DIRECTOR OFFICE OF BRIDGE DEVEL. DATE: 6/1/05	
REVISIONS	
SHA	FHWA
11-14-05	

FHWA APPROVAL
DATE:

STATE OF MARYLAND
DEPARTMENT OF TRANSPORTATION
STATE HIGHWAY ADMINISTRATION
OFFICE OF BRIDGE DEVELOPMENT

34" F-SHAPE PARAPET END POST WITHOUT FENCING OR RAILING TRAIL END

STANDARD NO. BR-SB(6.50)-05-365 SHEET 3 OF 3

SUBSTRUCTURE ABUT.

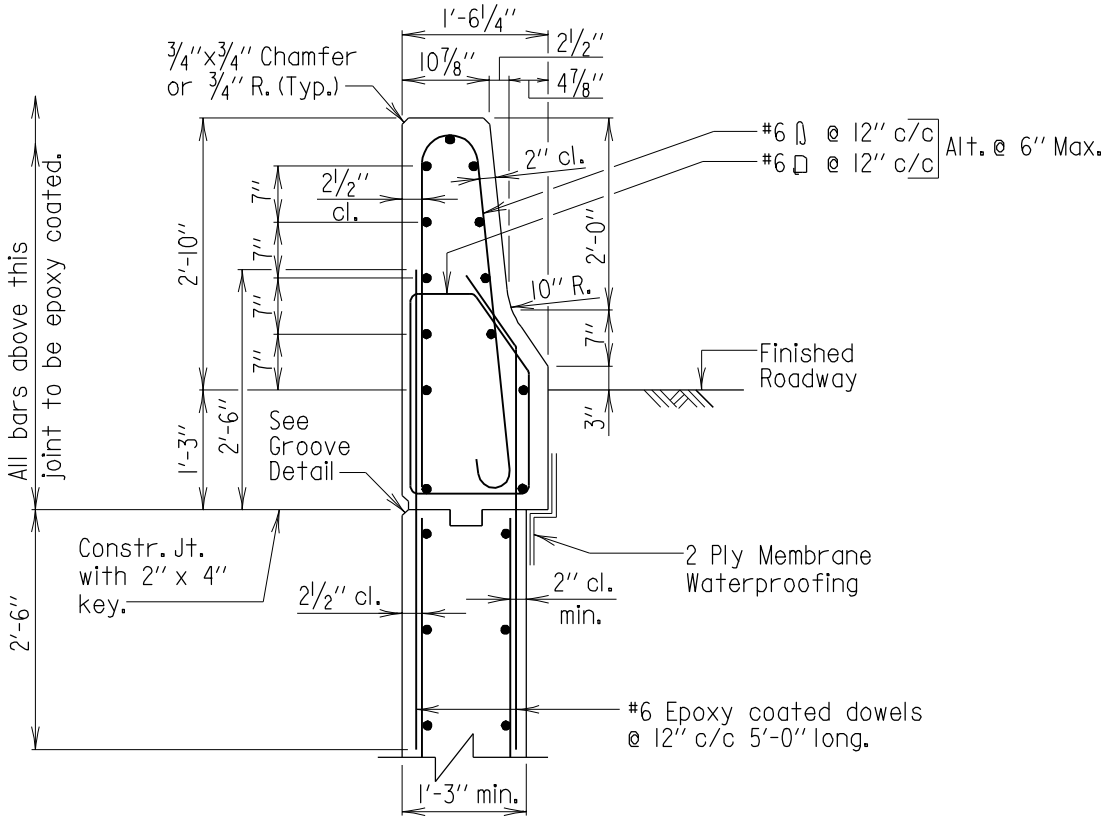

SECTION B-B

Scale: 1/2"=1'-0"

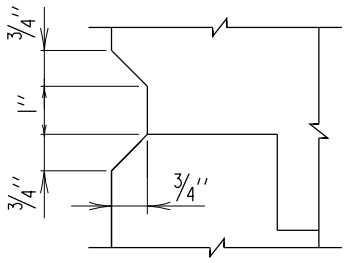

GROOVE DETAIL

Scale: 3"=1'-0"

Note:
All longitudinal bars are #5 spaced as shown.

34" STRAIGHT BACK

APPROVAL	
R.S. Freedman DIRECTOR OFFICE OF BRIDGE DEVEL. DATE: 6/1/05	
REVISIONS	
SHA	FHWA
11-14-05	

FHWA APPROVAL
DATE:

STATE OF MARYLAND
DEPARTMENT OF TRANSPORTATION
STATE HIGHWAY ADMINISTRATION
OFFICE OF BRIDGE DEVELOPMENT

34" F-SHAPE PARAPET END POST WITHOUT FENCING OR RAILING TRAIL END

STANDARD NO. BR-SB(6.50)-05-365 SHEET 3 OF 3

SUBSTRUCTURE ABUT.

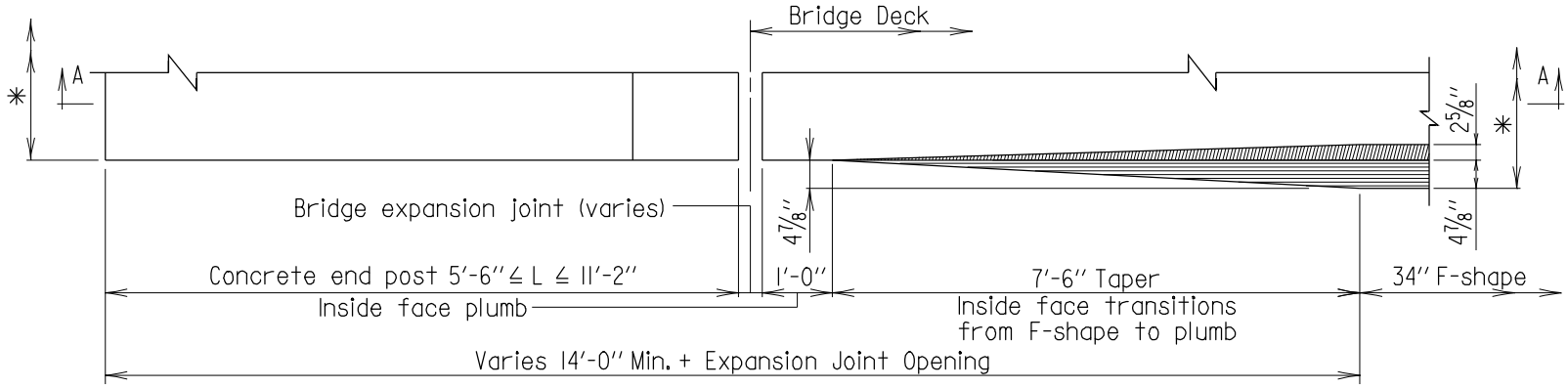

PLAN

Scale: 3/8''=1'-0''

* For overall parapet dimension see sheets 3 and 4.

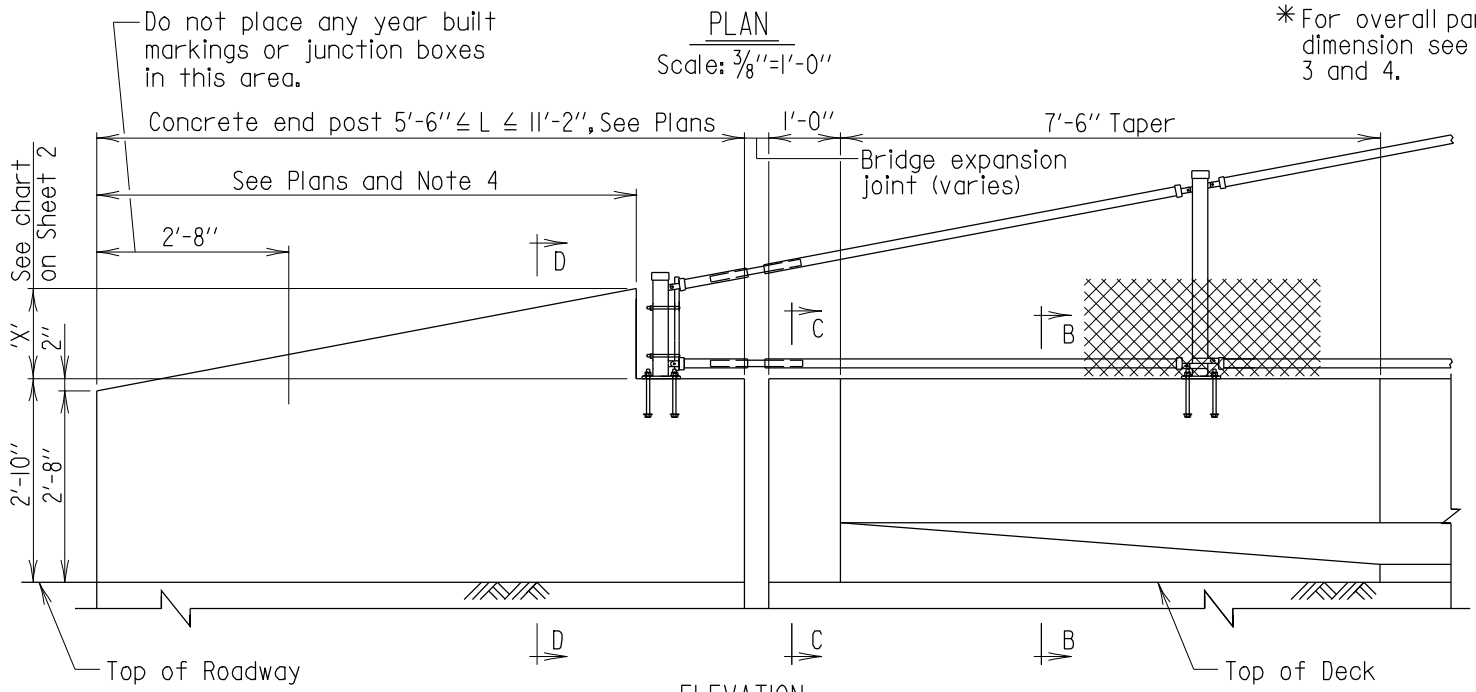

ELEVATION

Scale: 3/8''=1'-0''

Notes:

1. Use on the approach end of bridge when end post length is less than 11'-2''.
2. Thrie Beam Traffic Barrier not shown.
3. Type II fence shown, see Plans for fence or railing layout and details.
4. Taper barrier height to 2'-8'' when Thrie Beam is required. Taper barrier height to 2'-10'' and eliminate F-Shape transition when adjacent to concrete F-Shape barrier.

Note to Designer:
This standard contains details for straight back, diamond back and recessed back parapets. Include the appropriate shape in the Contract Plans.

FHWA APPROVAL	
DATE:	

APPROVAL
DIRECTOR OFFICE OF BRIDGE DEVEL.
DATE: 6/1/05

REVISIONS	
SHA	
FHWA	

STATE OF MARYLAND
DEPARTMENT OF TRANSPORTATION
STATE HIGHWAY ADMINISTRATION
OFFICE OF BRIDGE DEVELOPMENT

34'' F-SHAPE END POST WITH FENCING OR RAILING
(END POST LENGTH < = 11'-2'')

STANDARD NO. BR-SB(6.51)-05-366

SHEET 1 OF 4

SUBSTRUCTURE ABUT.

'X'	Fence or Railing Type
1'-0''	One Strand Railing
1'-3''	Type II Fence
1'-9''	Two Strand Railing

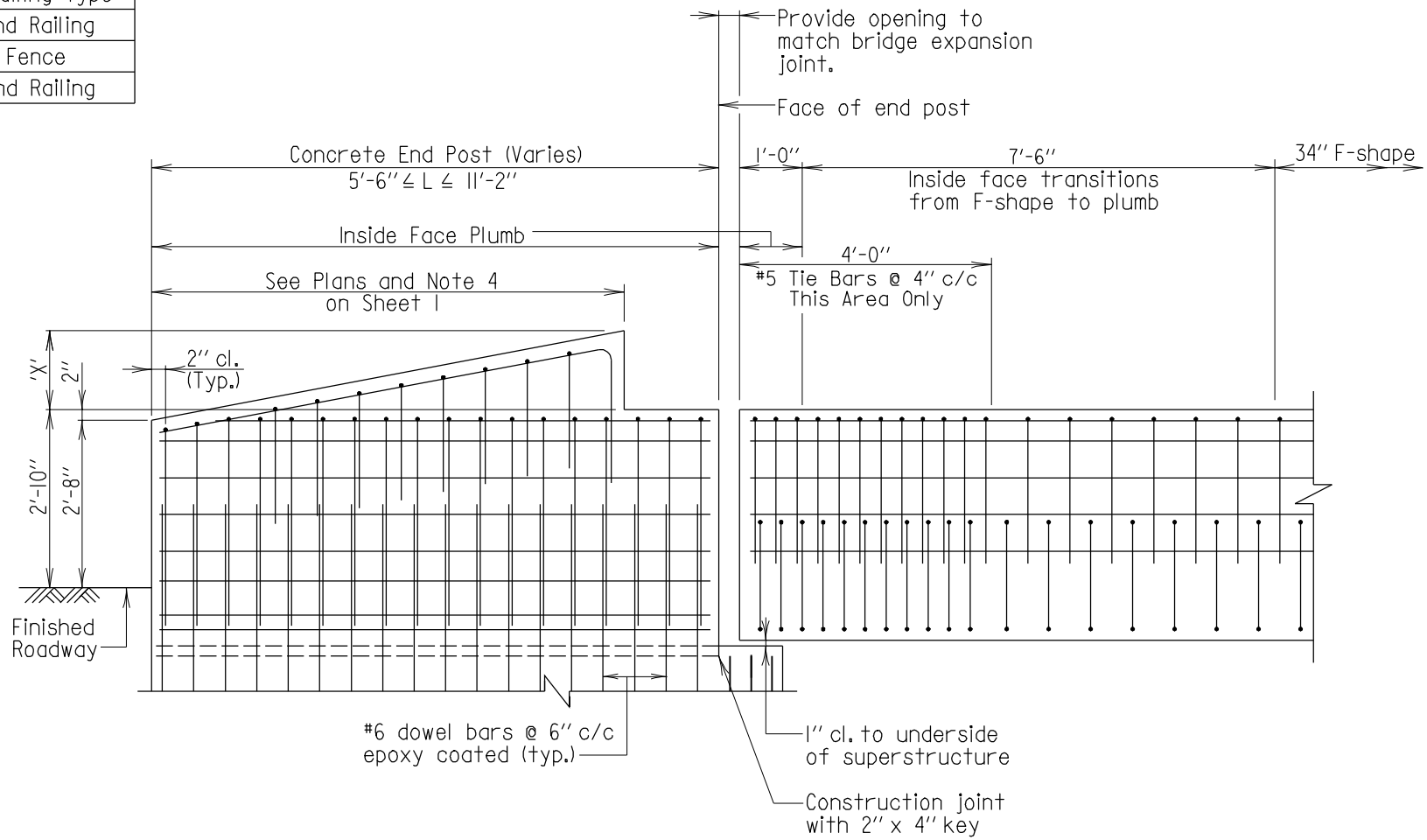

SECTION A-A

Scale: 3/8'' = 1'-0''

Notes:
1. For parapet reinforcing details see sheets 3 and 4.
2. If applicable, reinforcing for coping not shown.
3. Normal deck reinforcing not shown.
4. Fencing or railing not shown.

Note to Designer:
This standard contains details for straight back, diamond back and recessed back parapets. Include the appropriate shape in the Contract Plans.

STATE OF MARYLAND
DEPARTMENT OF TRANSPORTATION
STATE HIGHWAY ADMINISTRATION
OFFICE OF BRIDGE DEVELOPMENT

34'' F-SHAPE END POST WITH FENCING OR RAILING
(END POST LENGTH < = 11'-2'')

APPROVAL
DIRECTOR OFFICE OF BRIDGE DEVEL.
DATE: 6/1/05

REVISIONS
SHA 11-14-05
FHWA

FHWA APPROVAL
DATE:

STANDARD NO. BR-SB(6.51)-05-366

SHEET 2 OF 4

SUBSTRUCTURE ABUT.

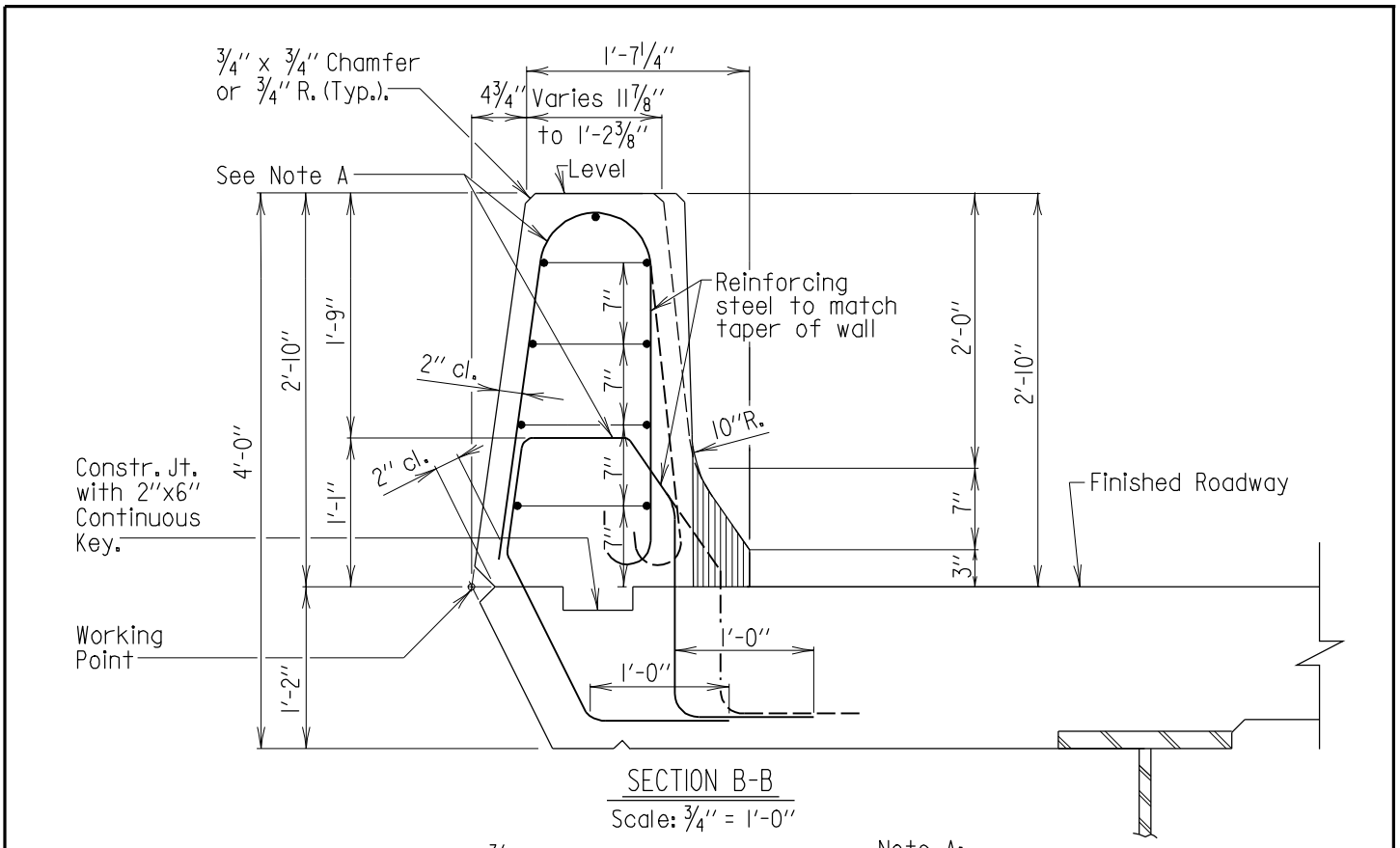

SECTION B-B

Scale: 3/4'' = 1'-0''

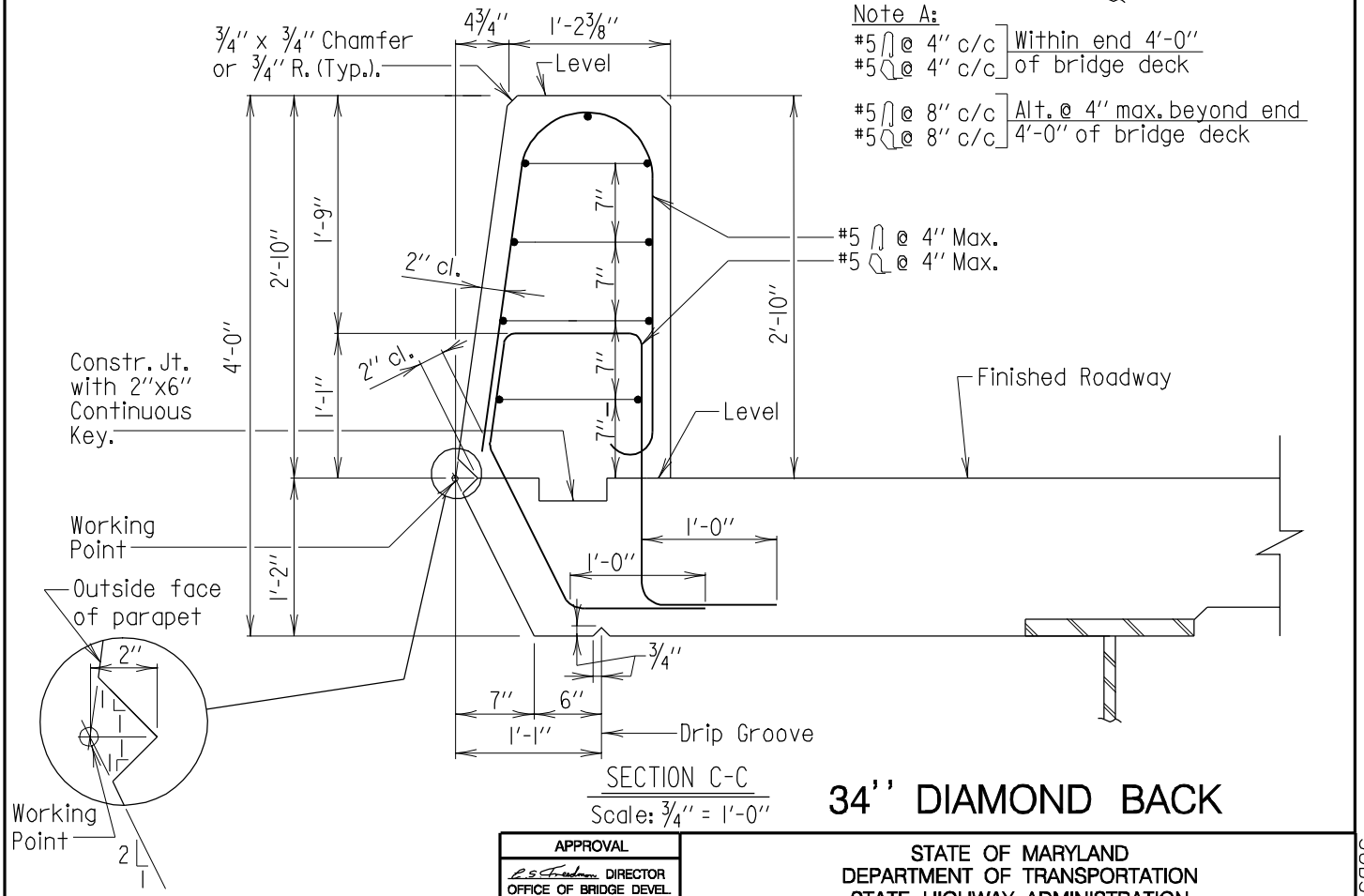

SECTION C-C

Scale: 3/4'' = 1'-0''

34'' DIAMOND BACK

Notes:
1. Normal deck reinforcing not shown.
2. All longitudinal bars are #5 spaced as shown.

APPROVAL	
R.S. Friedman DIRECTOR OFFICE OF BRIDGE DEVEL.	
DATE: 6/1/05	
REVISIONS	
SHA	FHWA

FHWA APPROVAL
DATE:

STATE OF MARYLAND
DEPARTMENT OF TRANSPORTATION
STATE HIGHWAY ADMINISTRATION
OFFICE OF BRIDGE DEVELOPMENT

34'' F-SHAPE END POST WITH FENCING OR RAILING
(END POST LENGTH < = 11'-2'')

STANDARD NO. BR-SB(6.51)-05-366

SHEET 3 OF 4

SUBSTRUCTURE ABUT.

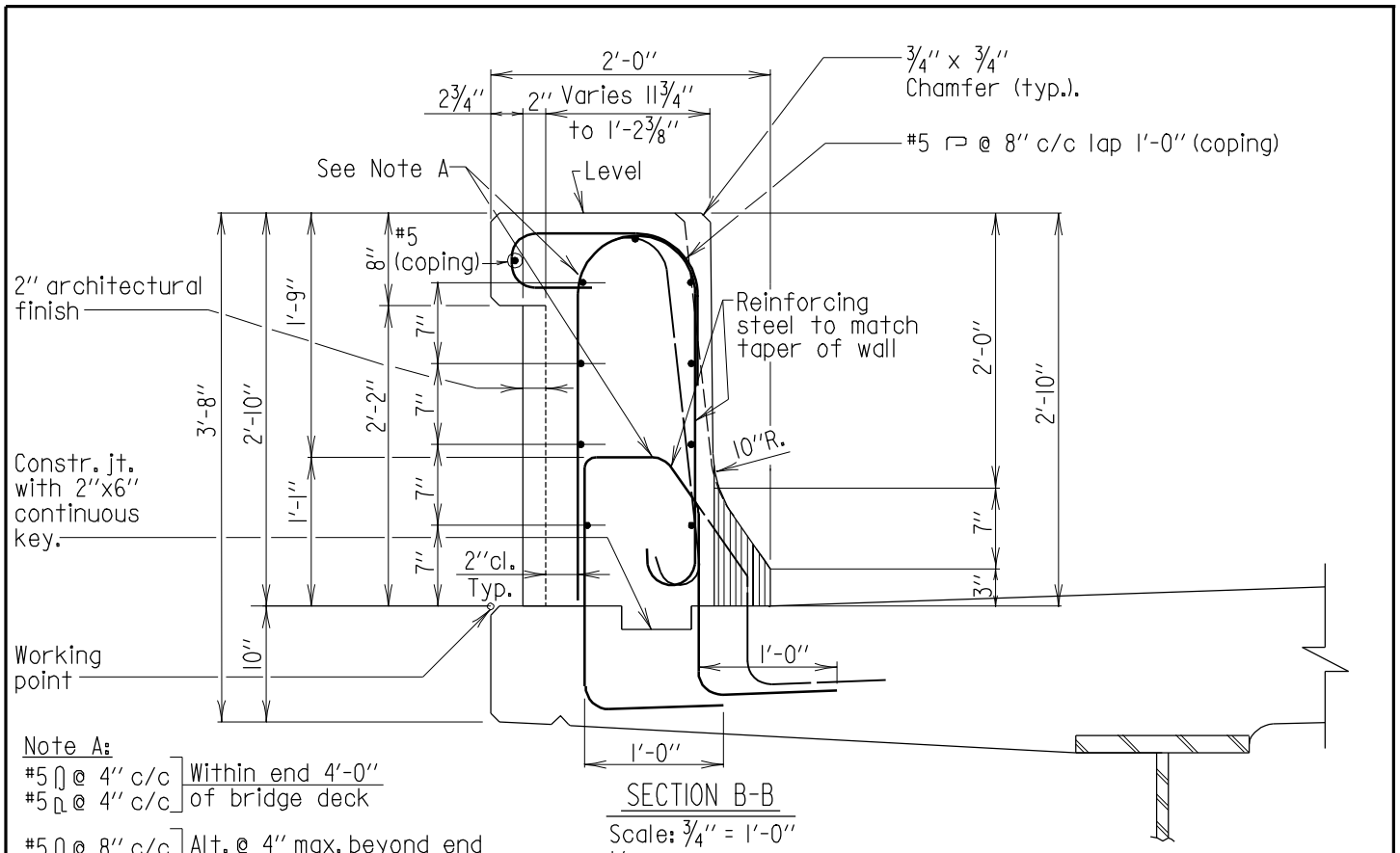

Note A:

#5 ∩ @ 4" c/c
#5 ⊓ @ 4" c/c
Within end 4'-0" of bridge deck

#5 ∩ @ 8" c/c
#5 ⊓ @ 8" c/c
Alt. @ 4" max. beyond end 4'-0" of bridge deck

SECTION B-B

Scale: ¾" = 1'-0"

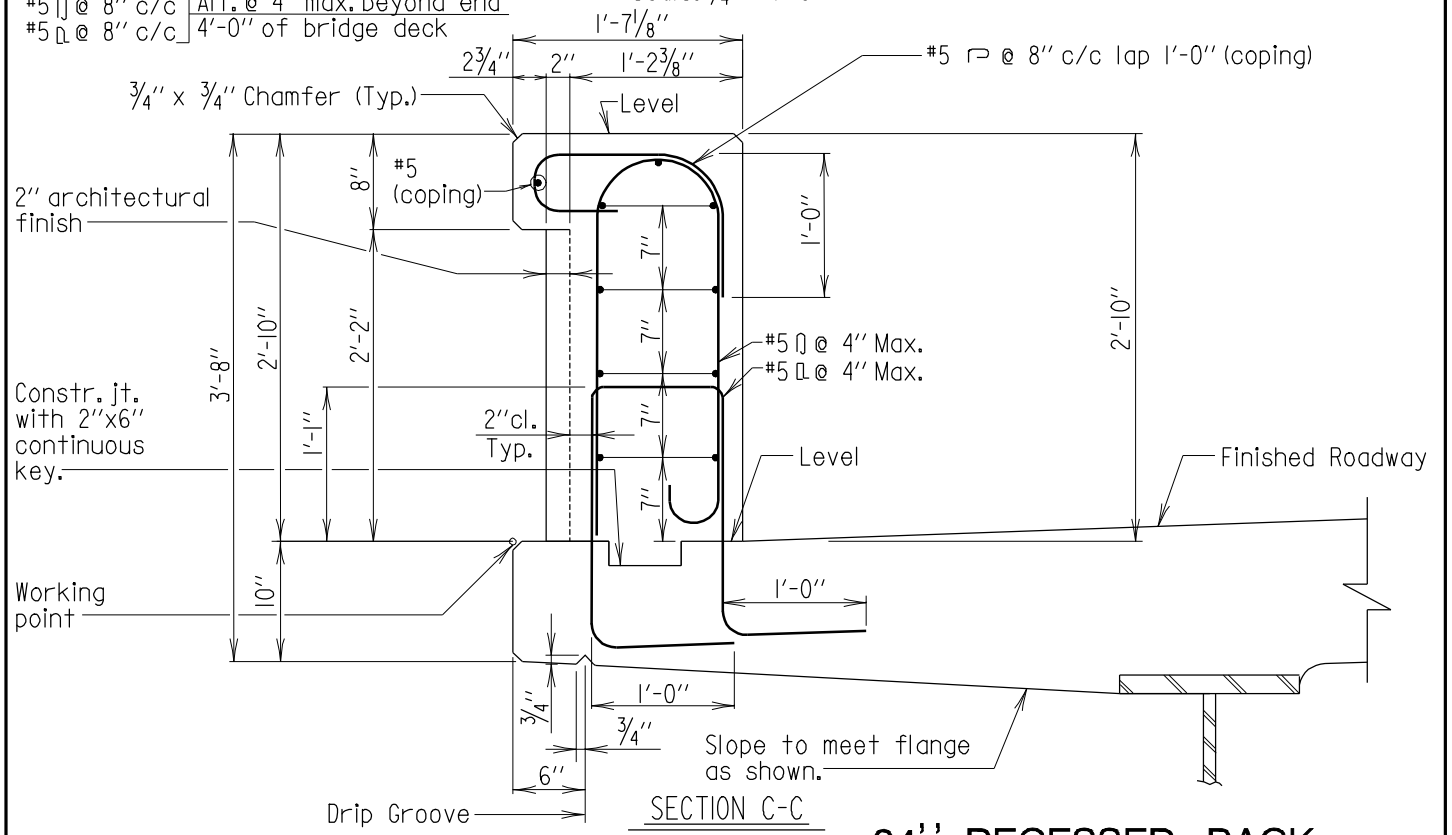

SECTION C-C

Scale: ¾" = 1'-0"

34" RECESSED BACK

Notes:
1. Normal deck reinforcing not shown.
2. All longitudinal bars are #5 spaced as shown.

APPROVAL	
R. S. Freedman DIRECTOR OFFICE OF BRIDGE DEVEL.	
DATE: 6/1/05	
REVISIONS	
SHA	FHWA

FHWA APPROVAL
DATE:

STATE OF MARYLAND
DEPARTMENT OF TRANSPORTATION
STATE HIGHWAY ADMINISTRATION
OFFICE OF BRIDGE DEVELOPMENT

34" F-SHAPE END POST WITH FENCING OR RAILING
(END POST LENGTH < = 11'-2")

STANDARD NO. BR-SB(6.51)-05-366 SHEET 3 OF 4

SUBSTRUCTURE ABUT.

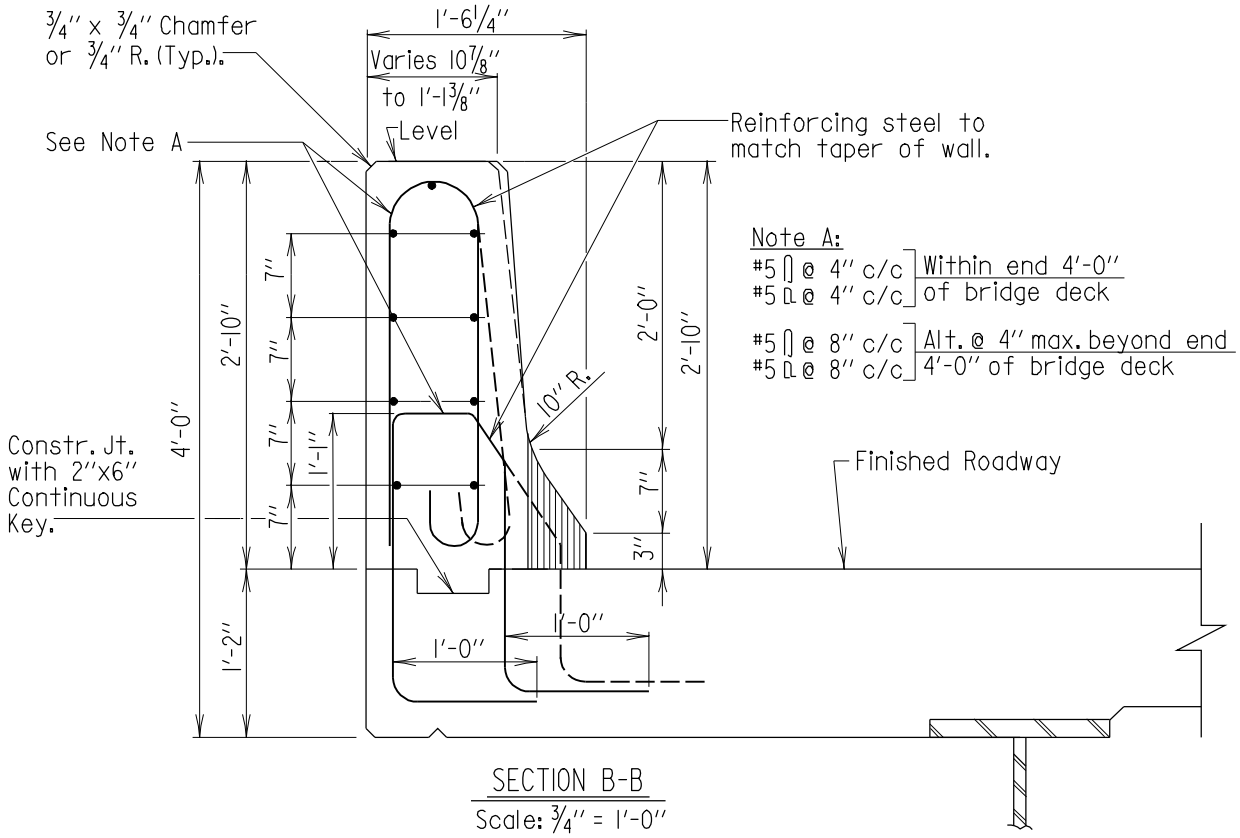

SECTION B-B

Scale: 3/4'' = 1'-0''

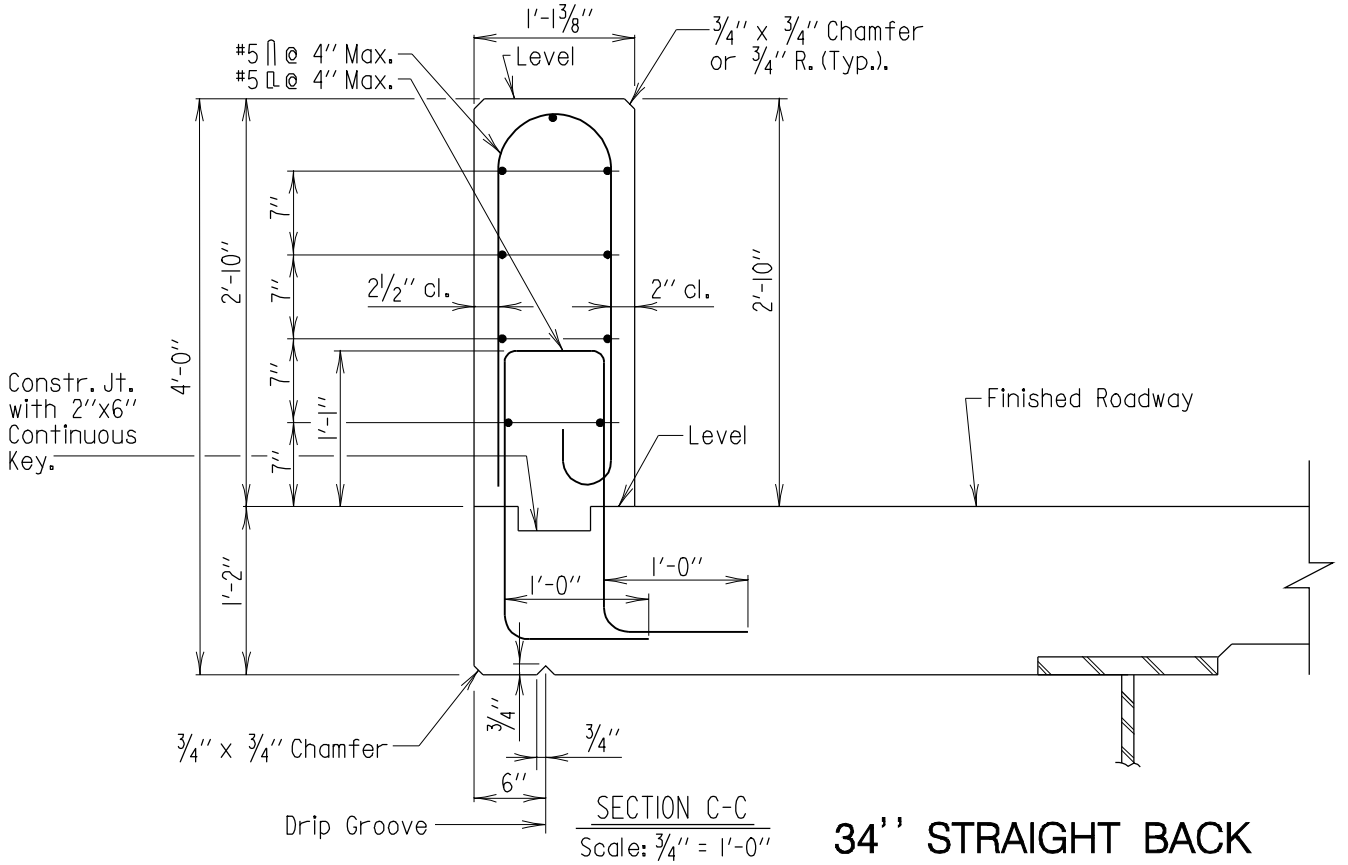

SECTION C-C

Scale: 3/4'' = 1'-0''

34'' STRAIGHT BACK

Notes:
1. Normal deck reinforcing not shown.
2. All longitudinal bars are #5 spaced as shown.

APPROVAL	
R. S. Freedman DIRECTOR OFFICE OF BRIDGE DEVEL. DATE: 6/1/05	
REVISIONS	
SHA	FHWA

FHWA APPROVAL
DATE:

STATE OF MARYLAND
DEPARTMENT OF TRANSPORTATION
STATE HIGHWAY ADMINISTRATION
OFFICE OF BRIDGE DEVELOPMENT

34'' F-SHAPE END POST WITH FENCING OR RAILING
(END POST LENGTH < = 11'-2'')

STANDARD NO. BR-SB(6.51)-05-366

SHEET 3 OF 4

SUBSTRUCTURE ABUT.

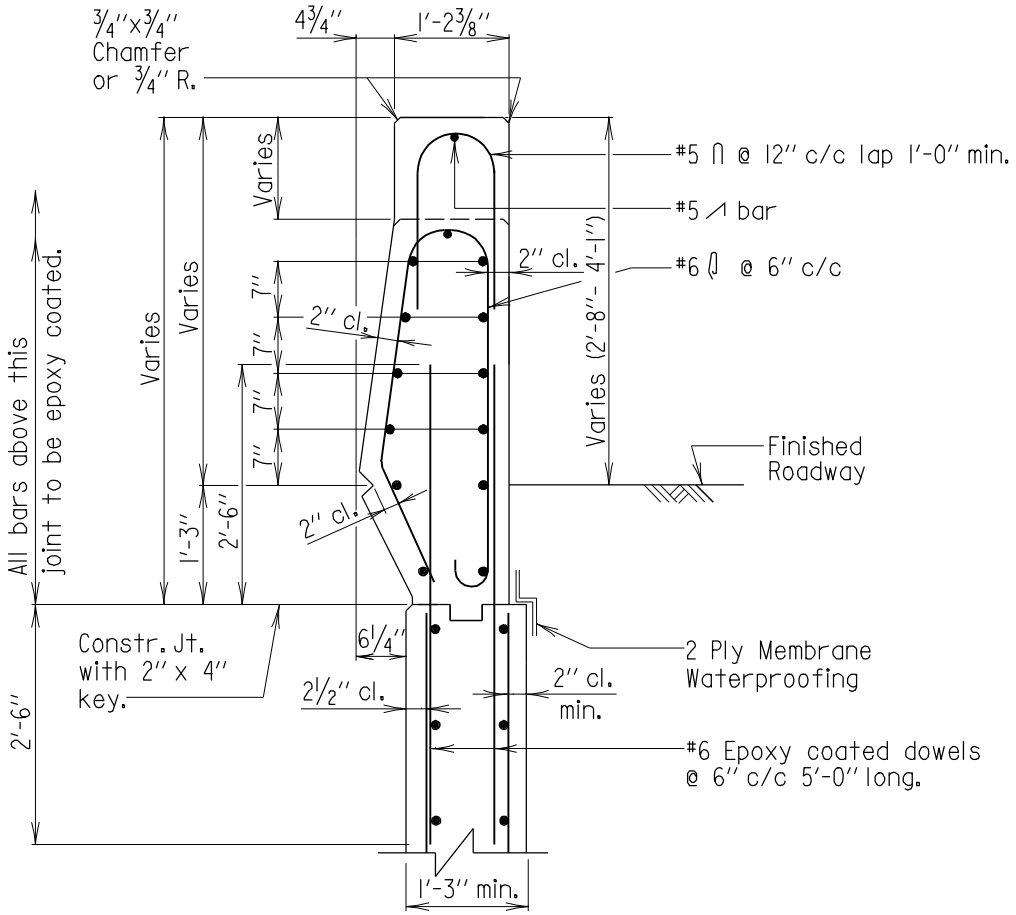

SECTION C-C

Scale: 1/2" = 1'-0"

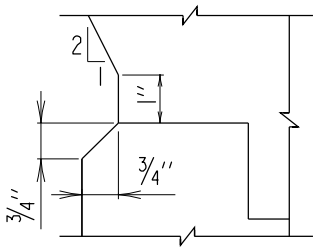

GROOVE DETAIL

Scale: 3" = 1'-0"

34" DIAMOND BACK

Note:
All longitudinal bars are #5 spaced as shown.

APPROVAL	
R.S. Freedman DIRECTOR OFFICE OF BRIDGE DEVEL. DATE: 6/1/05	
REVISIONS	
SHA	FHWA
11-14-05	

FHWA APPROVAL
DATE:

STATE OF MARYLAND
DEPARTMENT OF TRANSPORTATION
STATE HIGHWAY ADMINISTRATION
OFFICE OF BRIDGE DEVELOPMENT

34" F-SHAPE END POST WITH FENCING OR RAILING
(END POST LENGTH < = 11'-2")

STANDARD NO. BR-SB(6.51)-05-366 SHEET 4 OF 4

SUBSTRUCTURE ABUT.

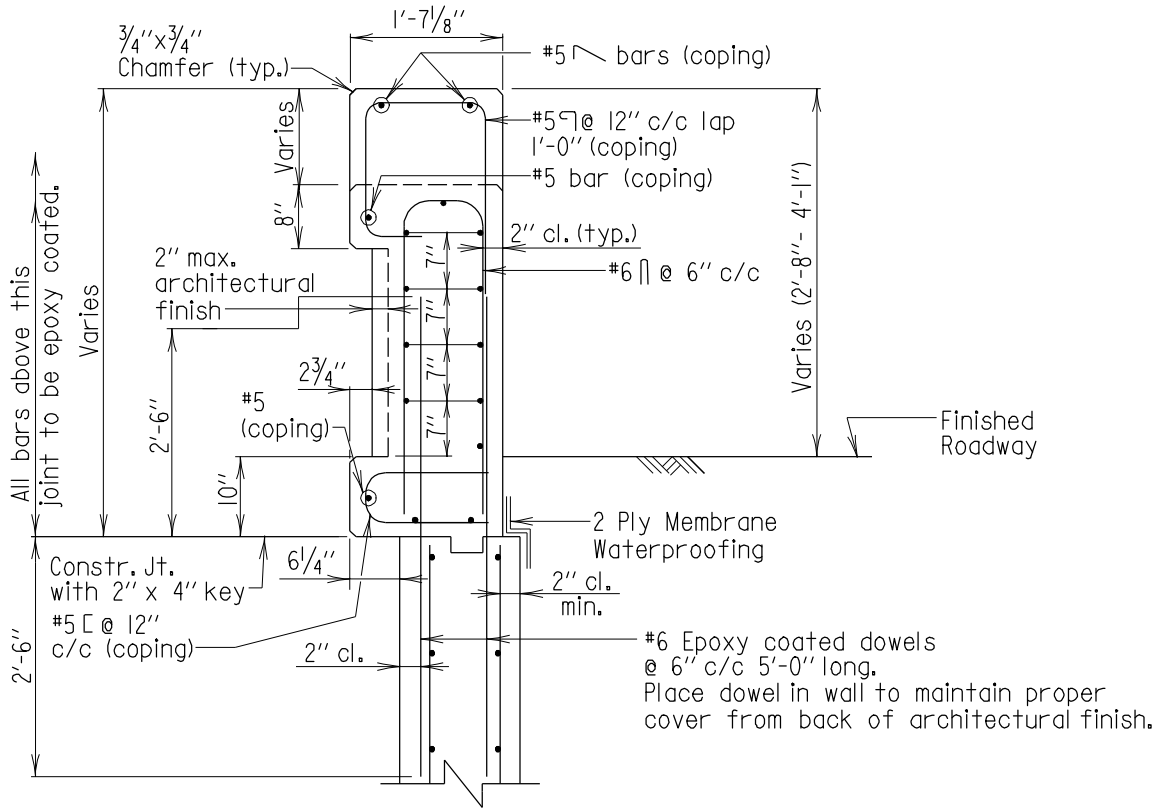

SECTION D-D

Scale: 1/2"=1'-0"

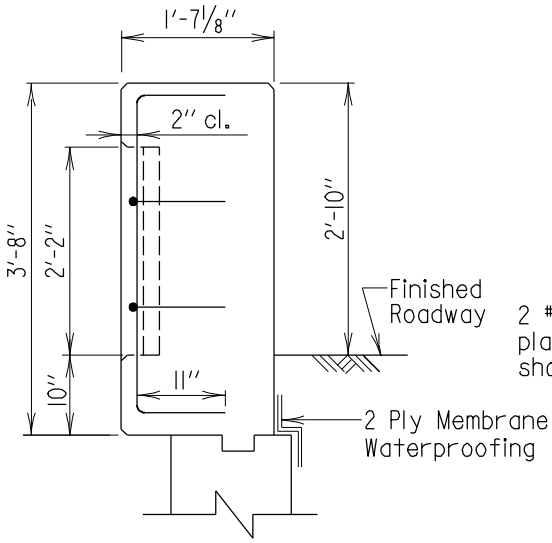

SECTION E-E

Scale: 1/2"=1'-0"

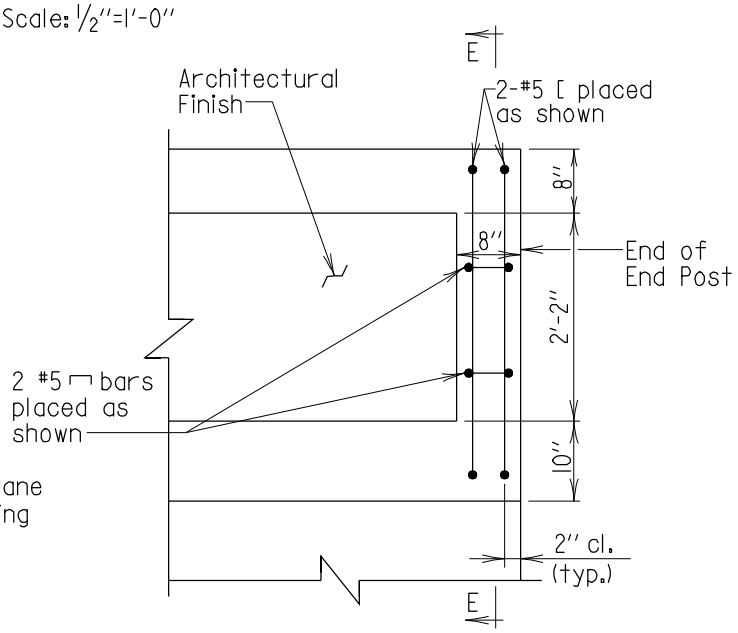

PARTIAL REAR ELEVATION

Scale: 1/2"=1'-0"

34" RECESSED BACK

Note:
All longitudinal bars are #5 spaced as shown.

APPROVAL	
R S Freedman DIRECTOR OFFICE OF BRIDGE DEVEL. DATE: 6/1/05	
REVISIONS	
SHA	FHWA
11-14-05	

FHWA APPROVAL
DATE:

STATE OF MARYLAND
DEPARTMENT OF TRANSPORTATION
STATE HIGHWAY ADMINISTRATION
OFFICE OF BRIDGE DEVELOPMENT

34" F-SHAPE END POST WITH FENCING OR RAILING
(END POST LENGTH < = 11'-2")

STANDARD NO. BR-SB(6.51)-05-366 SHEET 4 OF 4

SUBSTRUCTURE ABUT.

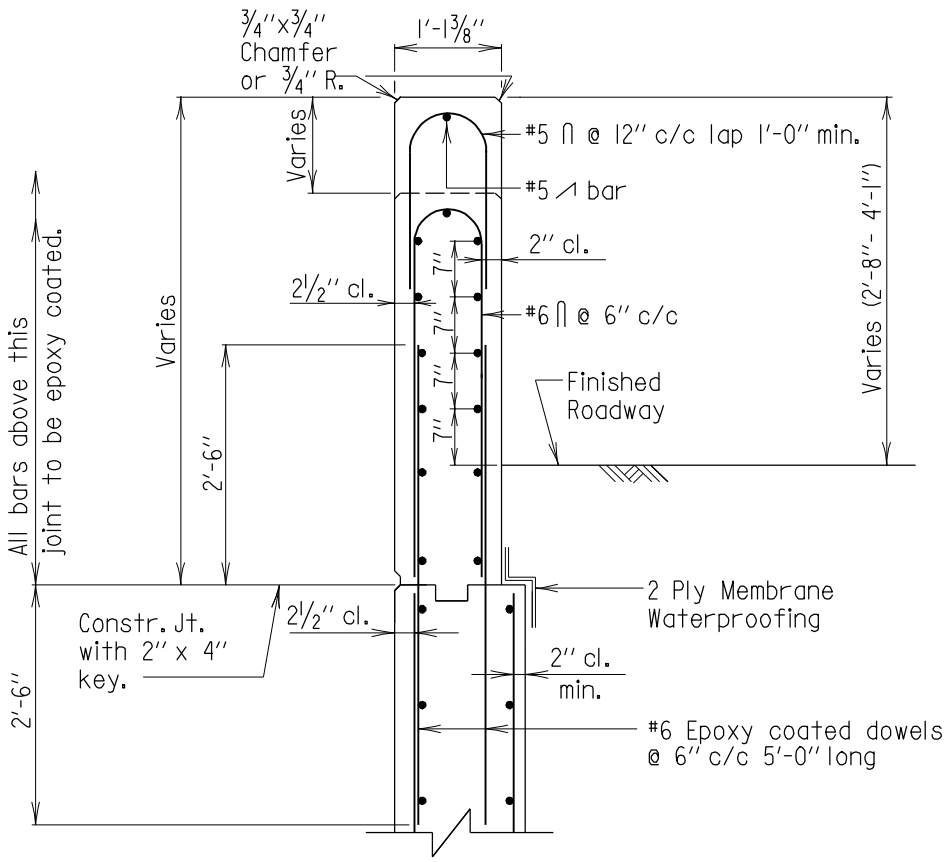

SECTION D-D

Scale: 1/2" = 1'-0"

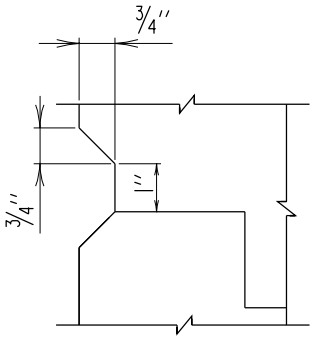

GROOVE DETAIL

Scale: 3" = 1'-0"

34" STRAIGHT BACK

Note:
All longitudinal bars are #5 spaced as shown.

APPROVAL	
R S Freedman DIRECTOR OFFICE OF BRIDGE DEVEL. DATE: 6/1/05	
REVISIONS	
SHA	FHWA
11-14-05	·
·	·
·	·
·	·

FHWA APPROVAL
DATE:

STATE OF MARYLAND
DEPARTMENT OF TRANSPORTATION
STATE HIGHWAY ADMINISTRATION
OFFICE OF BRIDGE DEVELOPMENT

34" F-SHAPE END POST WITH FENCING OR RAILING
(END POST LENGTH < = 11'-2")

STANDARD NO. BR-SB(6.51)-05-366 SHEET 4 OF 4

SUBSTRUCTURE ABUT.

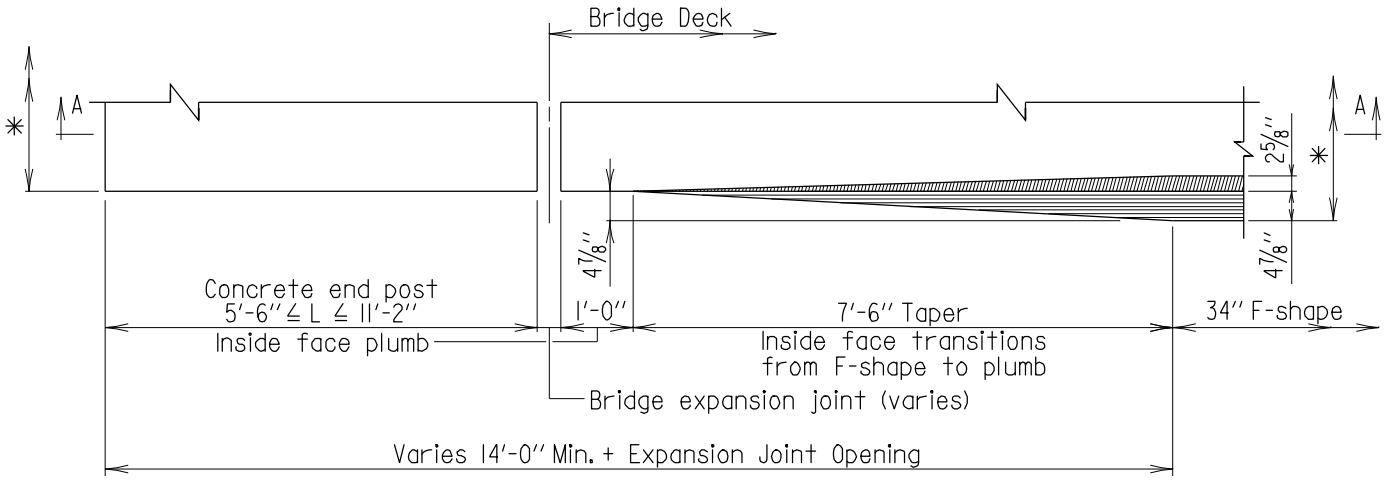

* For overall parapet dimension see sheets 3 and 4.

PLAN

Scale: 3/8"=1'-0"

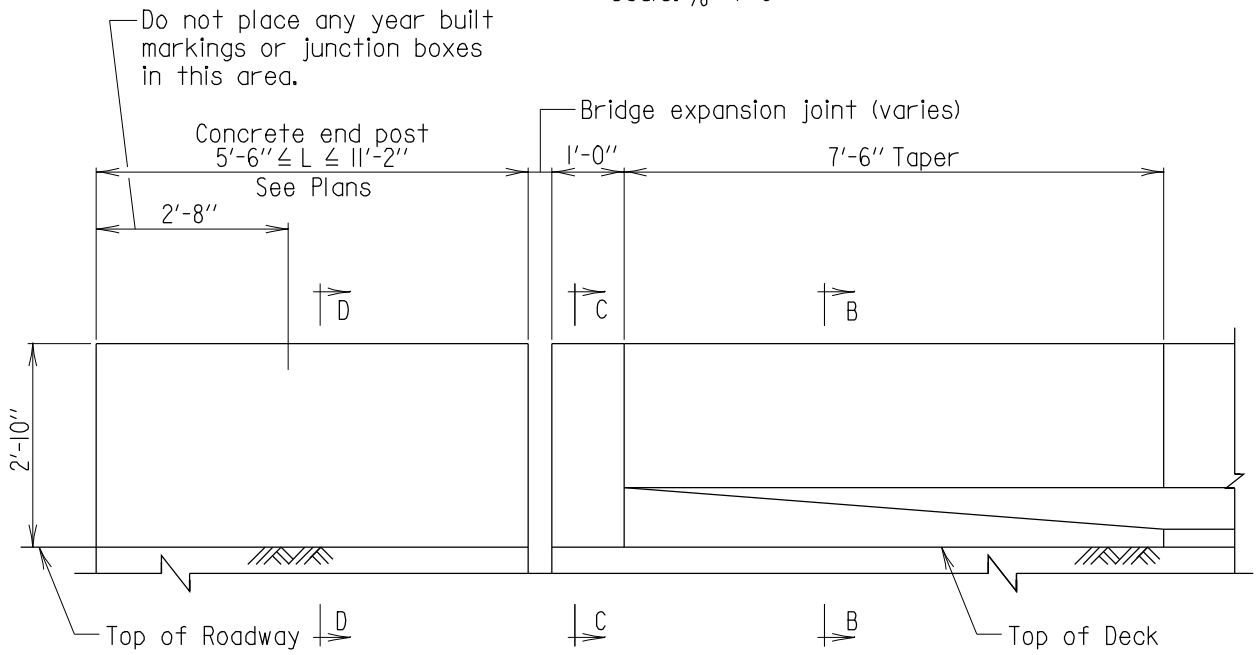

ELEVATION

Scale: 3/8"=1'-0"

Note to Designer:
This standard contains details for straight back, diamond back and recessed back parapets. Include the appropriate shape in the Contract Plans.

Notes:
1. Use on approach end of bridge when end post is less than 11'-2".
2. Thrie Beam Traffic Barrier attachment not shown.

APPROVAL	
R S Freedman DIRECTOR OFFICE OF BRIDGE DEVEL. DATE: 6/1/05	
REVISIONS	
SHA	FHWA
.	.
.	.
.	.
.	.

FHWA APPROVAL
DATE:

STATE OF MARYLAND
DEPARTMENT OF TRANSPORTATION
STATE HIGHWAY ADMINISTRATION
OFFICE OF BRIDGE DEVELOPMENT

34" F-SHAPE END POST WITHOUT FENCING OR RAILING
(APPROACH END, END POST LENGTH < = 11'-2")

STANDARD NO. BR-SB(6.52)-05-367 SHEET 1 OF 4

SUBSTRUCTURE ABUT.

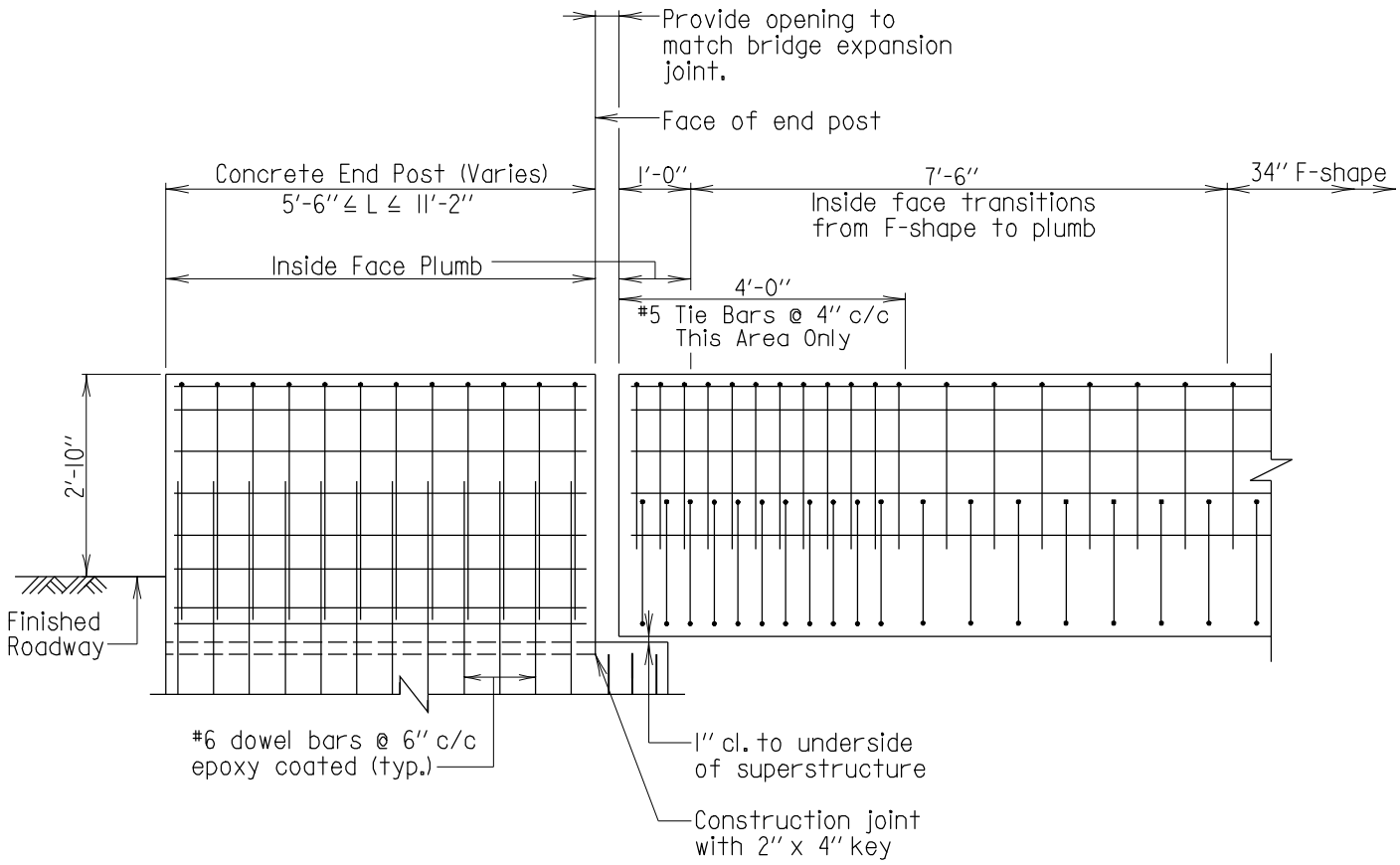

SECTION A-A

Scale: 3/8" = 1'-0"

Note to Designer:
This standard contains details for straight back, diamond back and recessed back parapets. Include the appropriate shape in the Contract Plans.

Notes:
1. For parapet reinforcing details see sheets 3 and 4.
2. If applicable, reinforcing for coping not shown.
3. Normal deck reinforcing not shown.

APPROVAL	
R S Freedman DIRECTOR OFFICE OF BRIDGE DEVEL.	
DATE: 6/1/05	
REVISIONS	
SHA	FHWA
11-14-05	·
·	·
·	·
·	·

FHWA APPROVAL
DATE:

STATE OF MARYLAND
DEPARTMENT OF TRANSPORTATION
STATE HIGHWAY ADMINISTRATION
OFFICE OF BRIDGE DEVELOPMENT

34" F-SHAPE END POST WITHOUT FENCING OR RAILING
(APPROACH END, END POST LENGTH < = 11'-2")

STANDARD NO. BR-SB(6.52)-05-367 SHEET 2 OF 4

SUBSTRUCTURE ABUT.

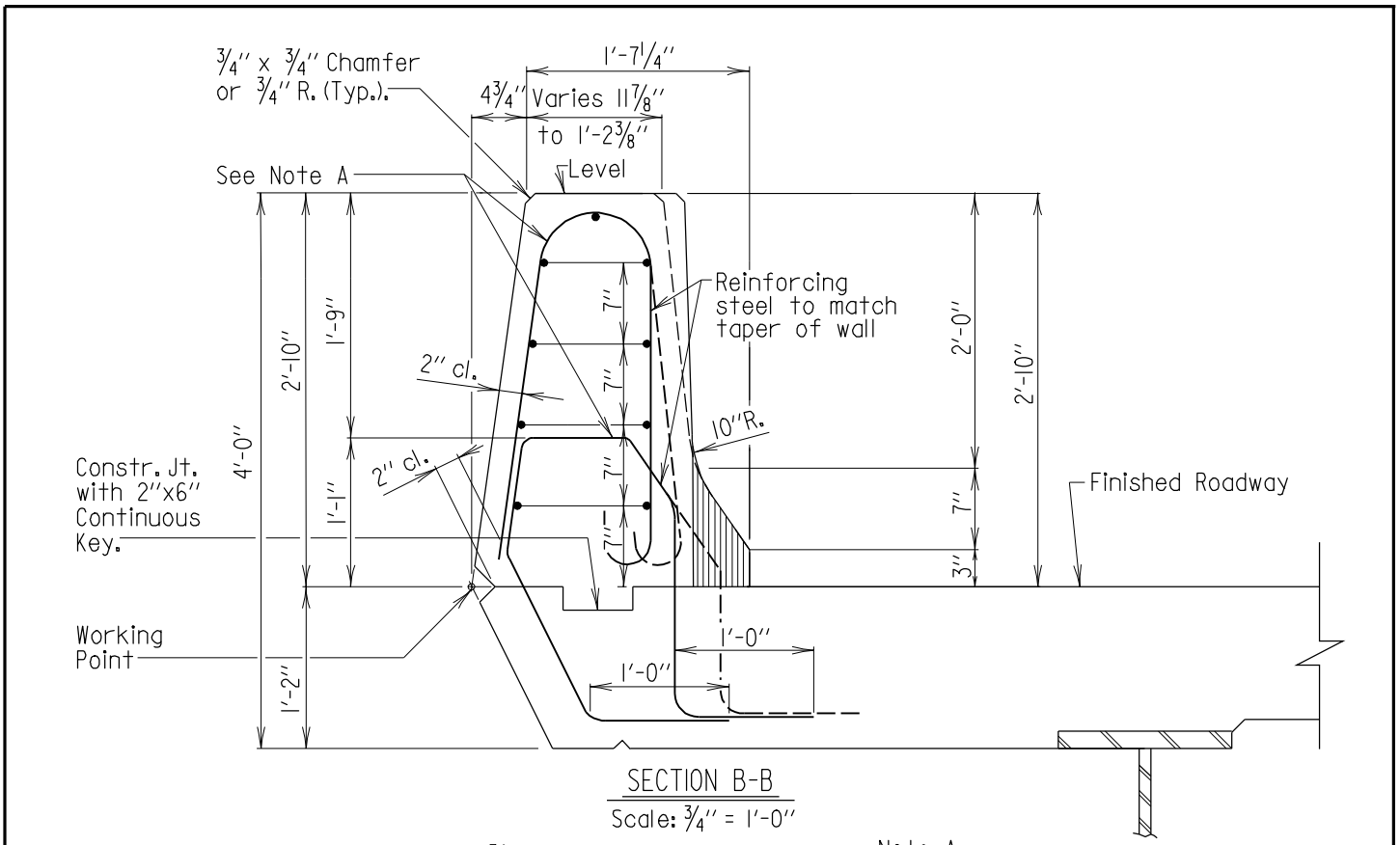

SECTION B-B

Scale: 3/4'' = 1'-0''

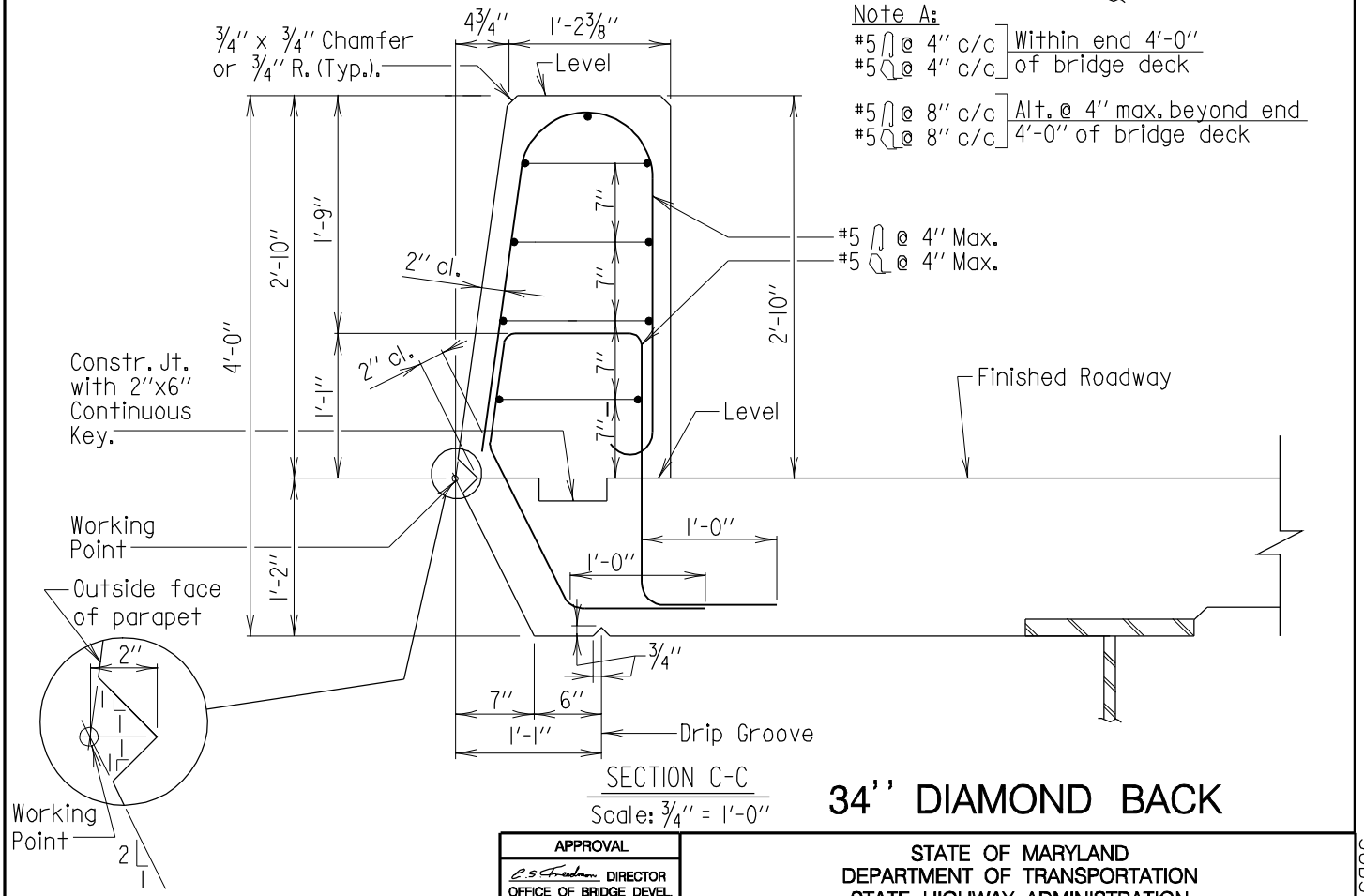

Note A:

#5 @ 4'' c/c, #5 @ 4'' c/c — Within end 4'-0'' of bridge deck

#5 @ 8'' c/c, #5 @ 8'' c/c — Alt. @ 4'' max. beyond end 4'-0'' of bridge deck

SECTION C-C

Scale: 3/4'' = 1'-0''

34'' DIAMOND BACK

Notes:
1. Normal deck reinforcing not shown.
2. All longitudinal bars are #5 spaced as shown.

APPROVAL	
DIRECTOR OFFICE OF BRIDGE DEVEL.	
DATE: 6/1/05	
REVISIONS	
SHA	FHWA

FHWA APPROVAL
DATE:

STATE OF MARYLAND
DEPARTMENT OF TRANSPORTATION
STATE HIGHWAY ADMINISTRATION
OFFICE OF BRIDGE DEVELOPMENT

34'' F-SHAPE END POST WITHOUT FENCING OR RAILING (APPROACH END, END POST LENGTH < = 11'-2'')

STANDARD NO. BR-SB(6.52)-05-367 SHEET 3 OF 4

SUBSTRUCTURE ABUT.

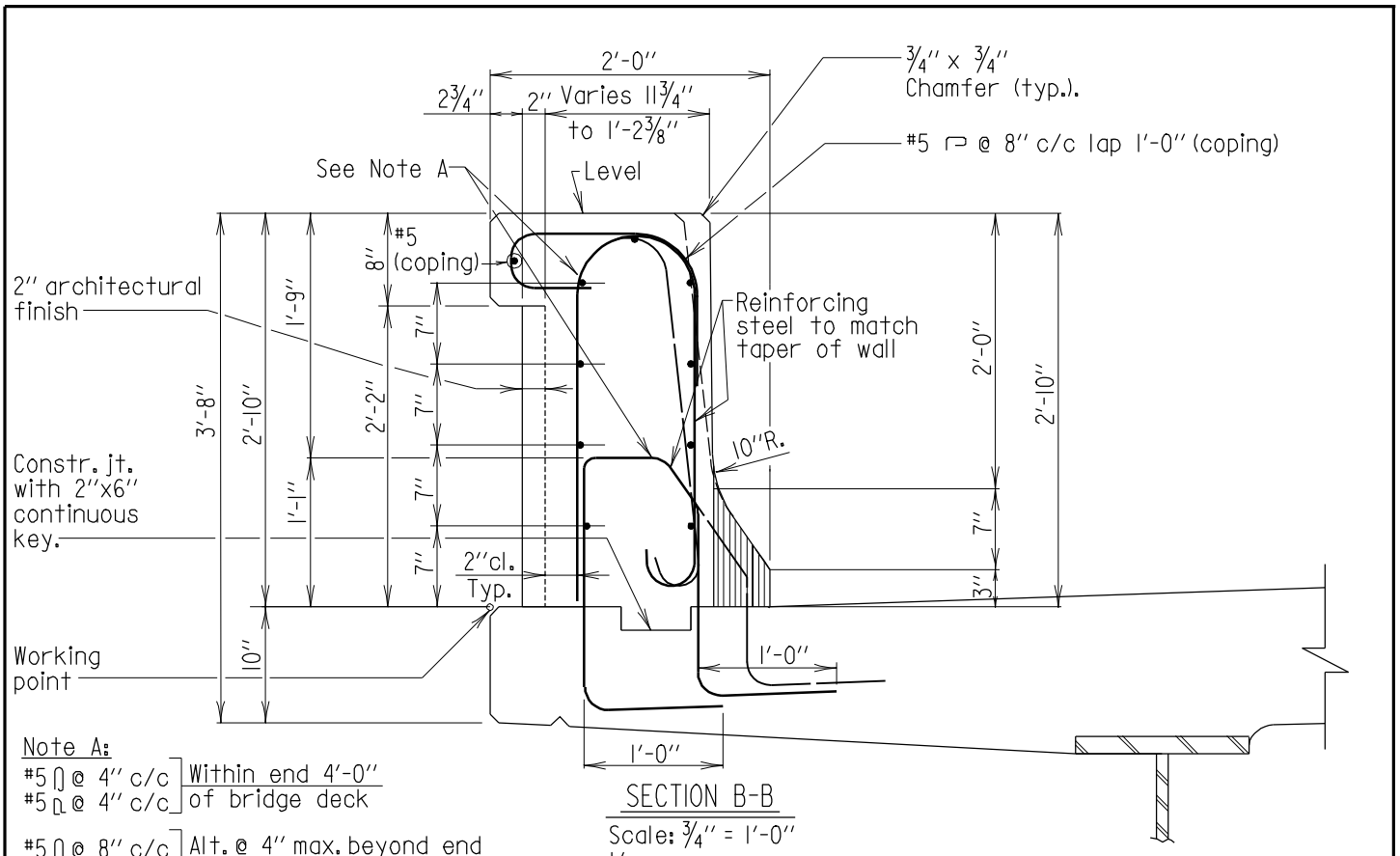

Note A:

#5 ∩ @ 4" c/c
#5 ⊔ @ 4" c/c
Within end 4'-0" of bridge deck

#5 ∩ @ 8" c/c
#5 ⊔ @ 8" c/c
Alt. @ 4" max. beyond end 4'-0" of bridge deck

SECTION B-B

Scale: ¾" = 1'-0"

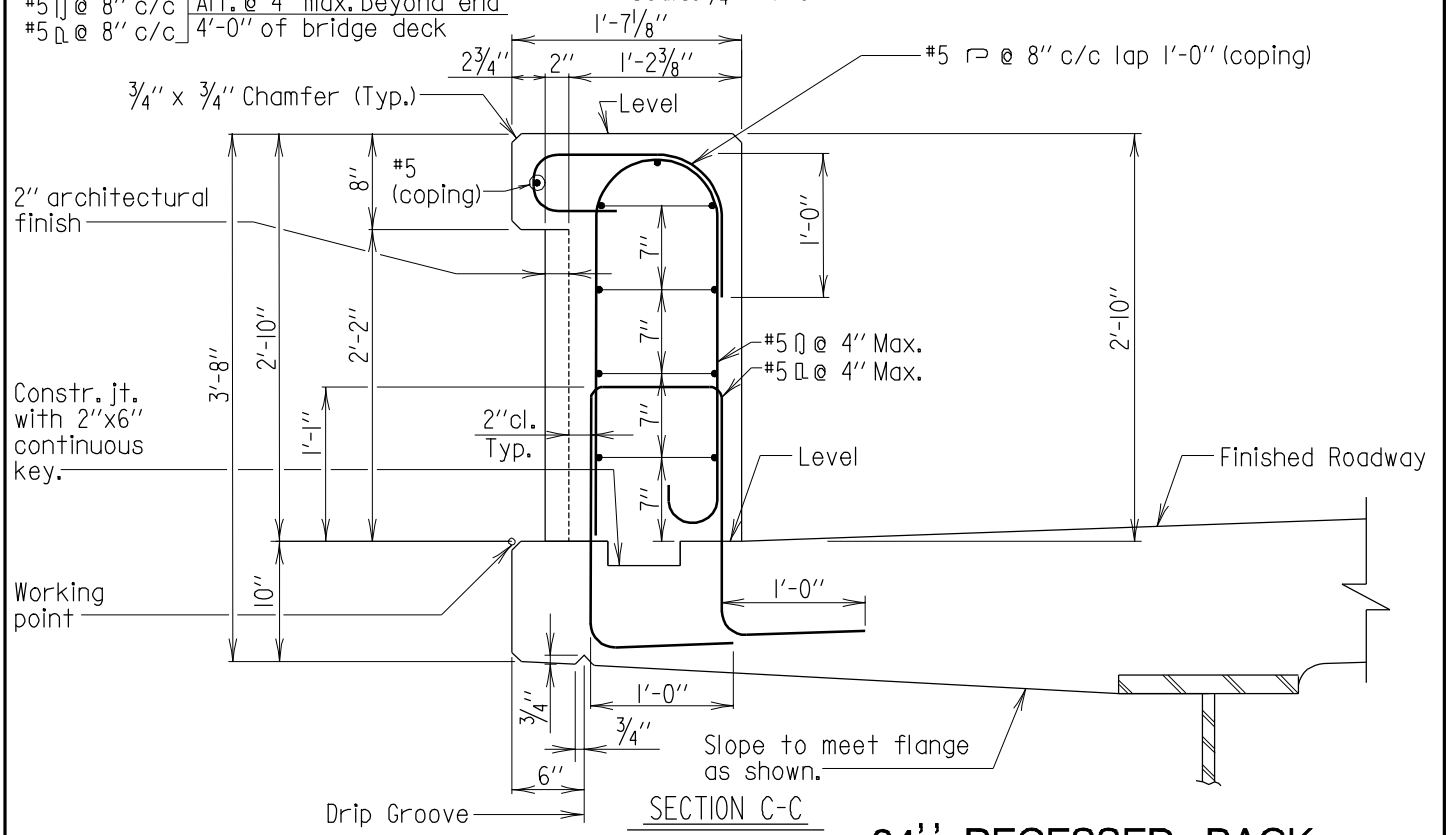

SECTION C-C

Scale: ¾" = 1'-0"

34" RECESSED BACK

Notes:
1. Normal deck reinforcing not shown.
2. All longitudinal bars are #5 spaced as shown.

APPROVAL	
R S Freedman DIRECTOR OFFICE OF BRIDGE DEVEL. DATE: 6/1/05	
REVISIONS	
SHA	FHWA

FHWA APPROVAL
DATE:

STATE OF MARYLAND
DEPARTMENT OF TRANSPORTATION
STATE HIGHWAY ADMINISTRATION
OFFICE OF BRIDGE DEVELOPMENT

34" F-SHAPE END POST WITHOUT FENCING OR RAILING (APPROACH END, END POST LENGTH < = 11'-2")

STANDARD NO. BR-SB(6.52)-05-367 SHEET 3 OF 4

SUBSTRUCTURE ABUT.

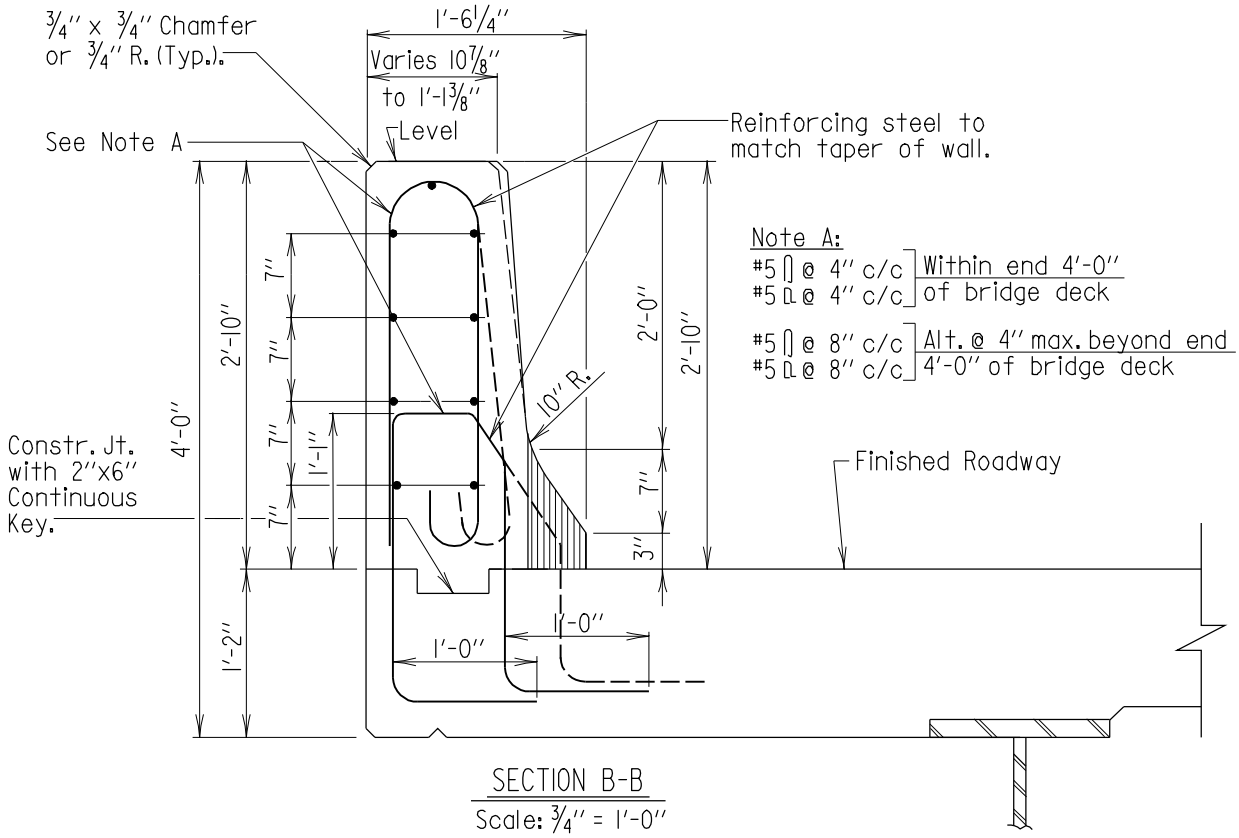

SECTION B-B

Scale: 3/4'' = 1'-0''

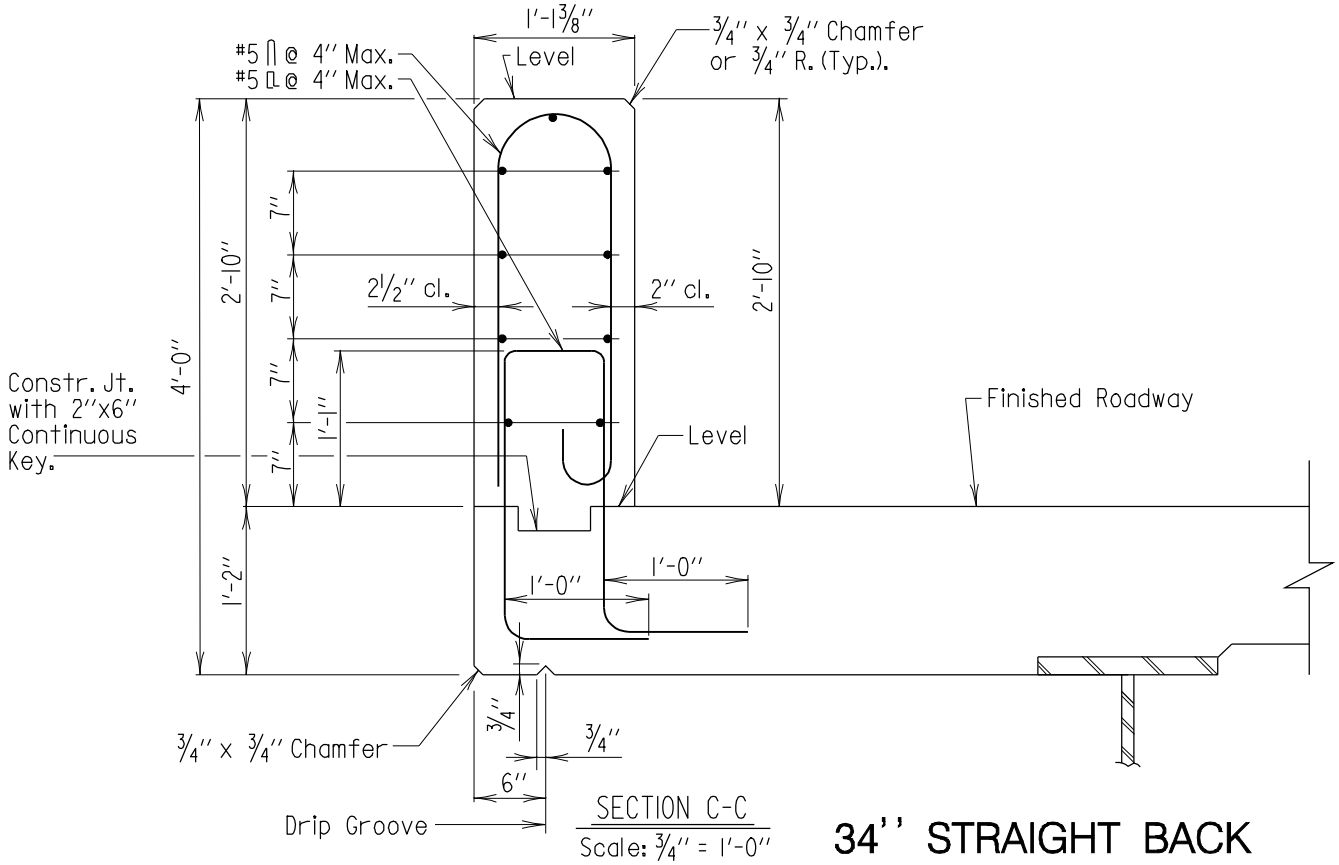

SECTION C-C

Scale: 3/4'' = 1'-0''

34'' STRAIGHT BACK

Notes:
1. Normal deck reinforcing not shown.
2. All longitudinal bars are #5 spaced as shown.

APPROVAL
R S Freedman DIRECTOR OFFICE OF BRIDGE DEVEL.
DATE: 6/1/05

REVISIONS	
SHA	FHWA

FHWA APPROVAL
DATE:

STATE OF MARYLAND
DEPARTMENT OF TRANSPORTATION
STATE HIGHWAY ADMINISTRATION
OFFICE OF BRIDGE DEVELOPMENT

34'' F-SHAPE END POST WITHOUT FENCING OR RAILING
(APPROACH END, END POST LENGTH < = 11'-2'')

STANDARD NO. BR-SB(6.52)-05-367 SHEET 3 OF 4

SUBSTRUCTURE ABUT.

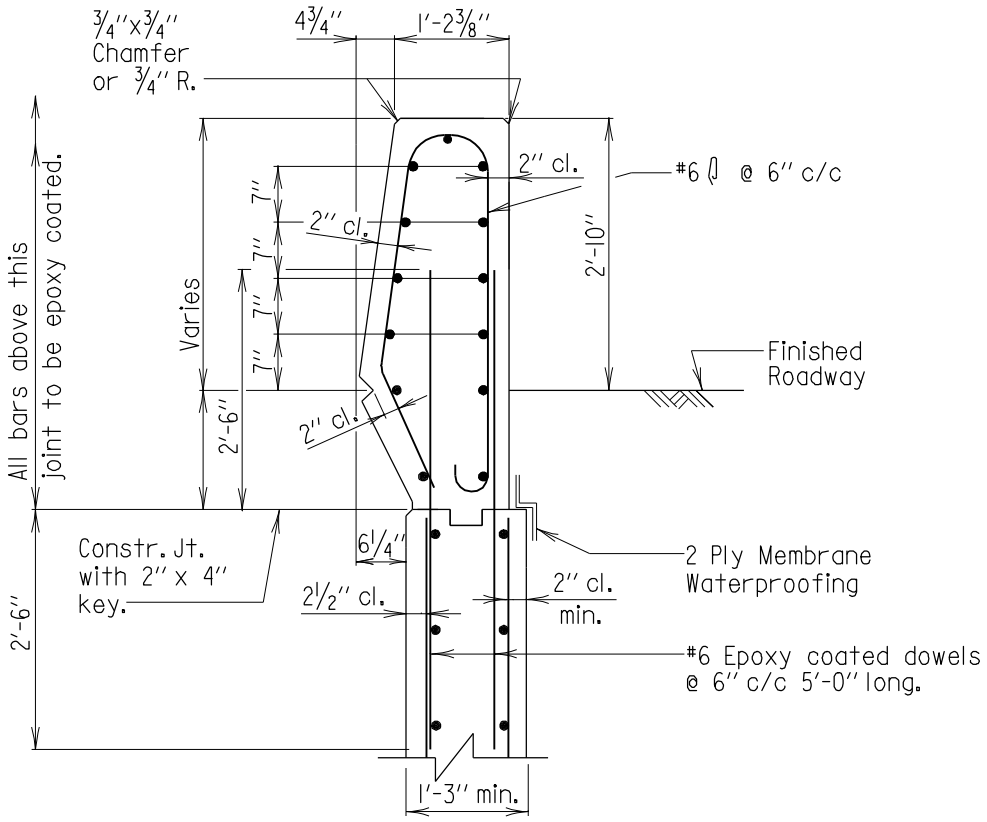

SECTION D-D

Scale: 1/2" = 1'-0"

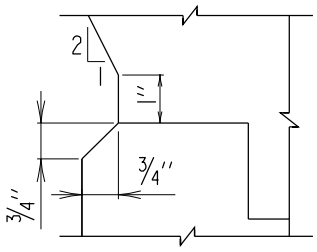

GROOVE DETAIL

Scale: 3" = 1'-0"

34" DIAMOND BACK

Note:
All longitudinal bars are #5 spaced as shown.

APPROVAL
R S Freedman DIRECTOR OFFICE OF BRIDGE DEVEL.
DATE: 6/1/05

REVISIONS	
SHA	FHWA
11-14-05	·
4-10-06	·
·	·
·	·

FHWA APPROVAL
DATE:

STATE OF MARYLAND
DEPARTMENT OF TRANSPORTATION
STATE HIGHWAY ADMINISTRATION
OFFICE OF BRIDGE DEVELOPMENT

34" F-SHAPE END POST WITHOUT FENCING OR RAILING
(APPROACH END, END POST LENGTH < = 11'-2")

STANDARD NO. BR-SB(6.52)-05-367 SHEET 4 OF 4

SUBSTRUCTURE ABUT.

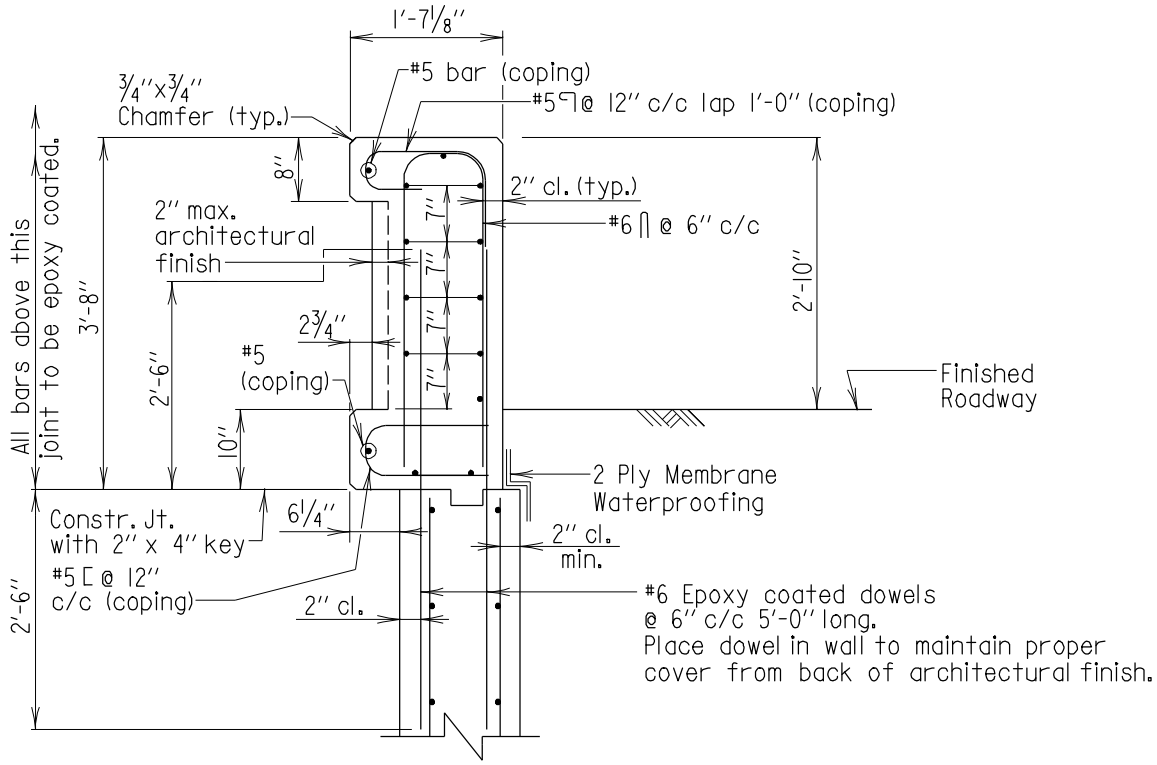

SECTION D-D

Scale: 1/2"=1'-0"

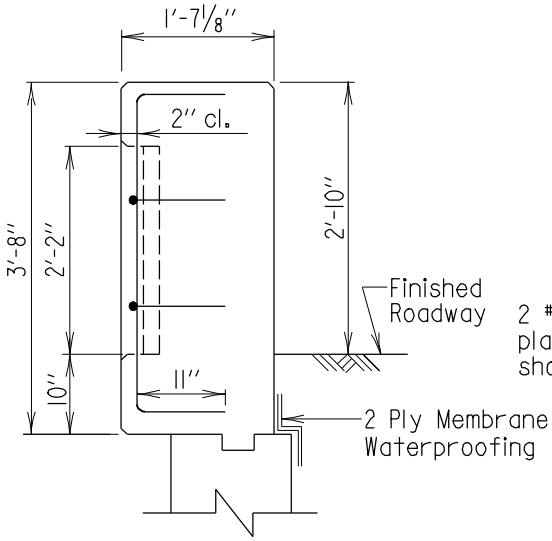

SECTION E-E

Scale: 1/2"=1'-0"

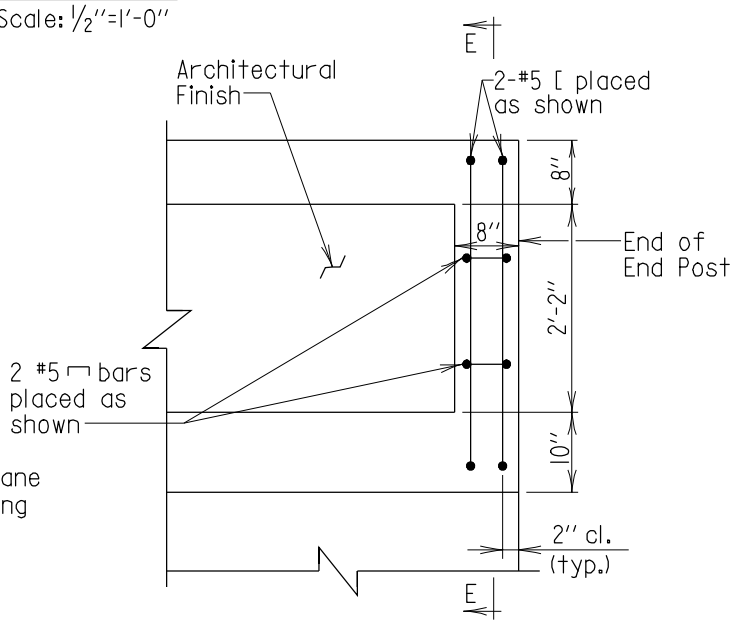

PARTIAL REAR ELEVATION

Scale: 1/2"=1'-0"

34'' RECESSED BACK

Note:
All longitudinal bars are #5 spaced as shown.

APPROVAL
R S Freedman DIRECTOR OFFICE OF BRIDGE DEVEL.
DATE: 6/1/05

REVISIONS	
SHA	FHWA
11-14-05	

FHWA APPROVAL
DATE:

STATE OF MARYLAND
DEPARTMENT OF TRANSPORTATION
STATE HIGHWAY ADMINISTRATION
OFFICE OF BRIDGE DEVELOPMENT

34'' F-SHAPE END POST WITHOUT FENCING OR RAILING
(APPROACH END, END POST LENGTH < = 11'-2'')

STANDARD NO. BR-SB(6.52)-05-367 SHEET 4 OF 4

SUBSTRUCTURE ABUT.

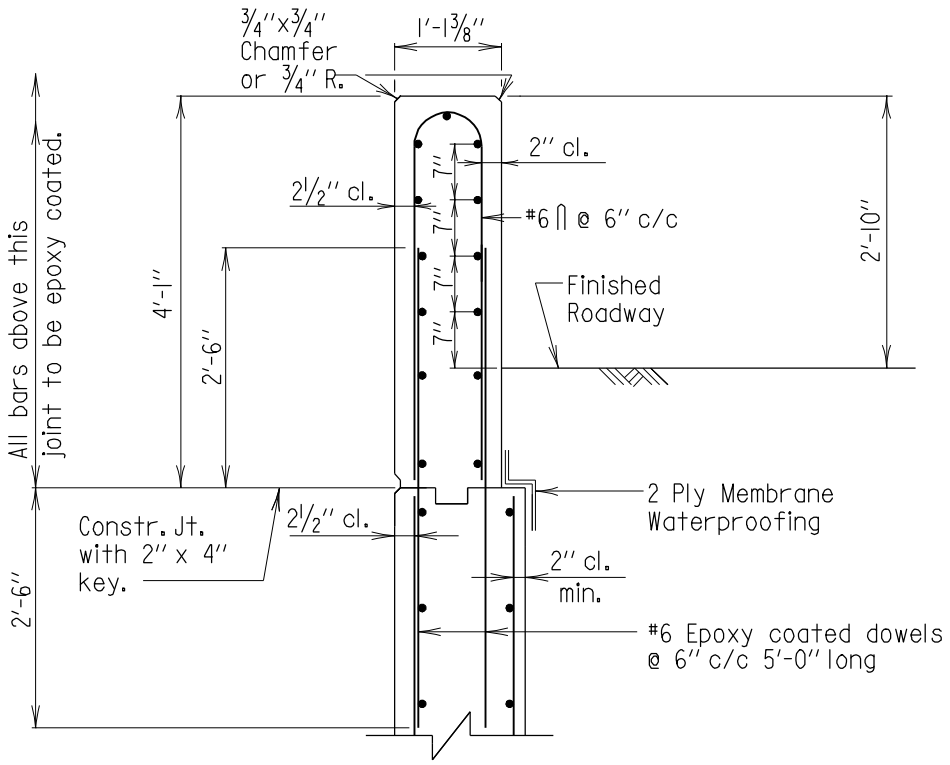

SECTION D-D

Scale: 1/2" = 1'-0"

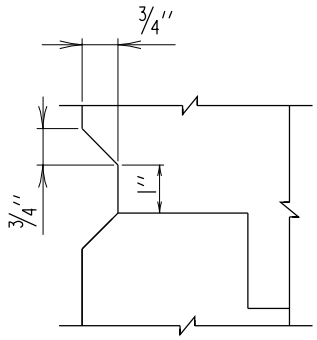

GROOVE DETAIL

Scale: 3" = 1'-0"

34" STRAIGHT BACK

Note:
All longitudinal bars are #5 spaced as shown.

APPROVAL	
R S Freedman DIRECTOR OFFICE OF BRIDGE DEVEL. DATE: 6/1/05	
REVISIONS	
SHA	FHWA
11-14-05	

FHWA APPROVAL
DATE:

STATE OF MARYLAND
DEPARTMENT OF TRANSPORTATION
STATE HIGHWAY ADMINISTRATION
OFFICE OF BRIDGE DEVELOPMENT

34" F-SHAPE END POST WITHOUT FENCING OR RAILING
(APPROACH END, END POST LENGTH < = 11'-2")

STANDARD NO. BR-SB(6.52)-05-367 SHEET 4 OF 4

SUBSTRUCTURE ABUT.

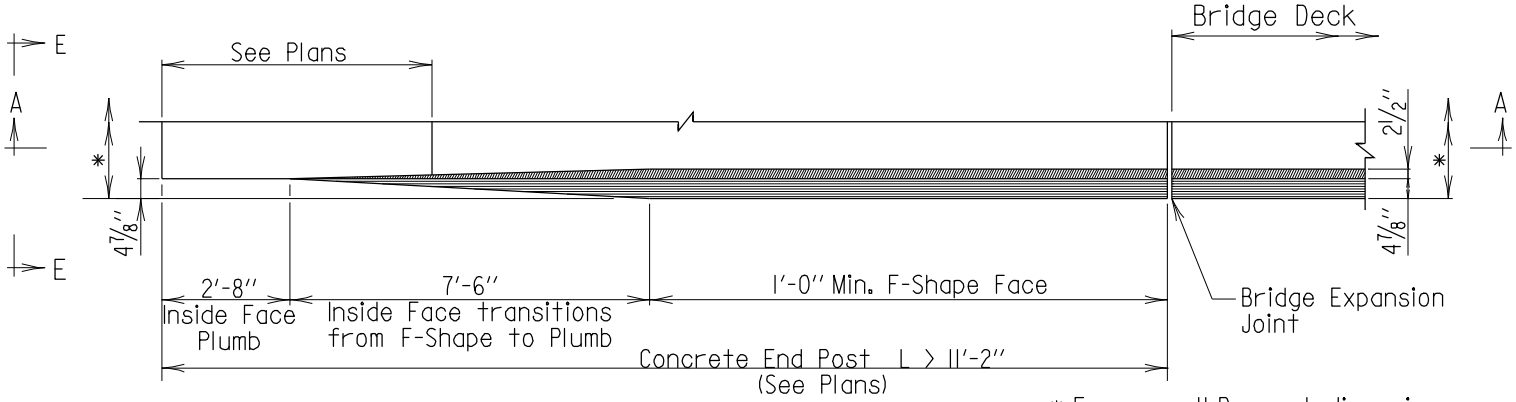

* For overall Parapet dimensions, see sheets 3 and 4 of 4.

PLAN

Scale: 1/4''=1'-0''

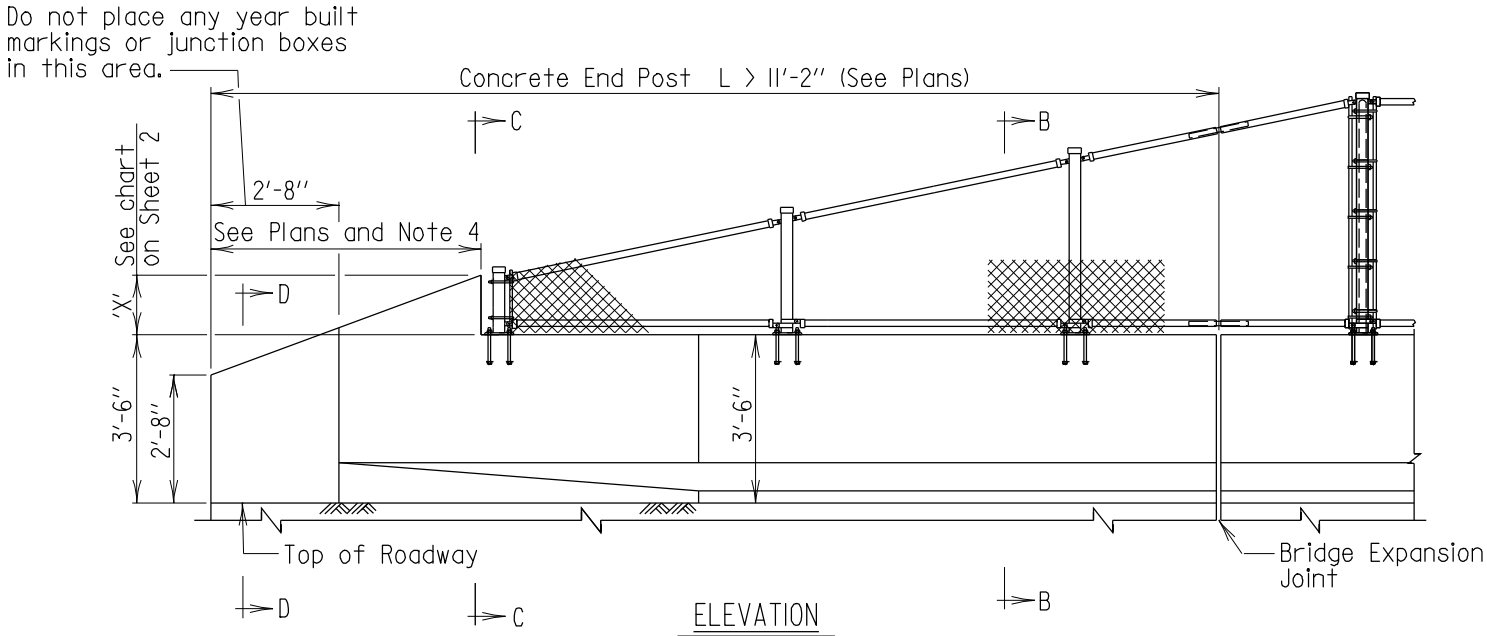

ELEVATION

Scale: 1/4''=1'-0''

Notes:

1. Use on the approach end of bridge when end post length is greater than 11'-2''.
2. Thrie Beam Traffic Barrier not shown.
3. Type II fence shown, see Plans for fence or railing layout and details.
4. Taper barrier height to 2'-8'' when Thrie Beam is required. Taper barrier height to 3'6'' and eliminate transition of F-Shape when adjacent to concrete F-Shape barrier.

Note to Designer:
This standard contains details for straight back, diamond back and recessed back parapets. Include the appropriate shape in the Contract Plans.

APPROVAL	
DIRECTOR OFFICE OF BRIDGE DEVEL.	
DATE: 6/1/05	
REVISIONS	
SHA	FHWA
.	.
.	.
.	.
.	.

FHWA APPROVAL
DATE: .

STATE OF MARYLAND
DEPARTMENT OF TRANSPORTATION
STATE HIGHWAY ADMINISTRATION
OFFICE OF BRIDGE DEVELOPMENT

42'' F-SHAPE PARAPET END POST WITH FENCING OR RAILING
APPROACH END, END POST LENGTH > 11'-2''

STANDARD NO. BR-SB(6.53)-05-368

SHEET 1 OF 4

SUBSTRUCTURE ABUT.

'X'	Fence or Railing Type
1'-0"	One Strand Railing
1'-3"	Type II Fence
1'-9"	Two Strand Railing

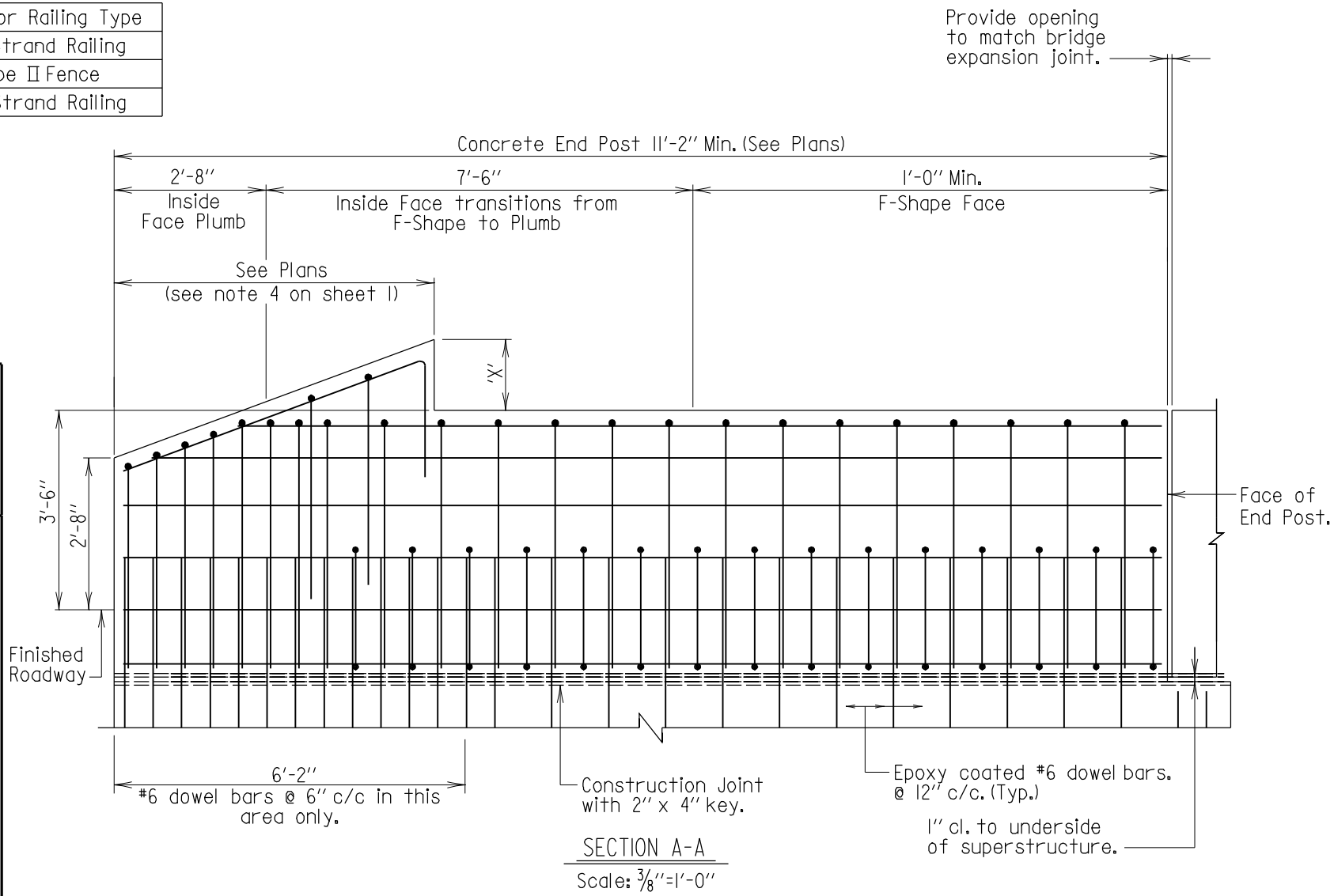

SECTION A-A

Scale: 3/8"=1'-0"

Notes:
1. For Parapet Reinforcing Details, see sheets 3 and 4.
2. Fencing or Railing not shown.
3. If applicable, reinforcing for coping not shown.

Note to Designer:
This standard contains details for straight back, diamond back and recessed back parapets. Include the appropriate shape in the Contract Plans.

APPROVAL
DIRECTOR OFFICE OF BRIDGE DEVEL.
DATE: 6/1/05

REVISIONS

SHA	11-14-05
FHWA	

FHWA APPROVAL
DATE:

STATE OF MARYLAND
DEPARTMENT OF TRANSPORTATION
STATE HIGHWAY ADMINISTRATION
OFFICE OF BRIDGE DEVELOPMENT

42" F-SHAPE PARAPET END POST WITH FENCING OR RAILING
APPROACH END, END POST LENGTH > 11'-2"

STANDARD NO. BR-SB(6.53)-05-368

SHEET 2 OF 4

SUBSTRUCTURE ABUT.

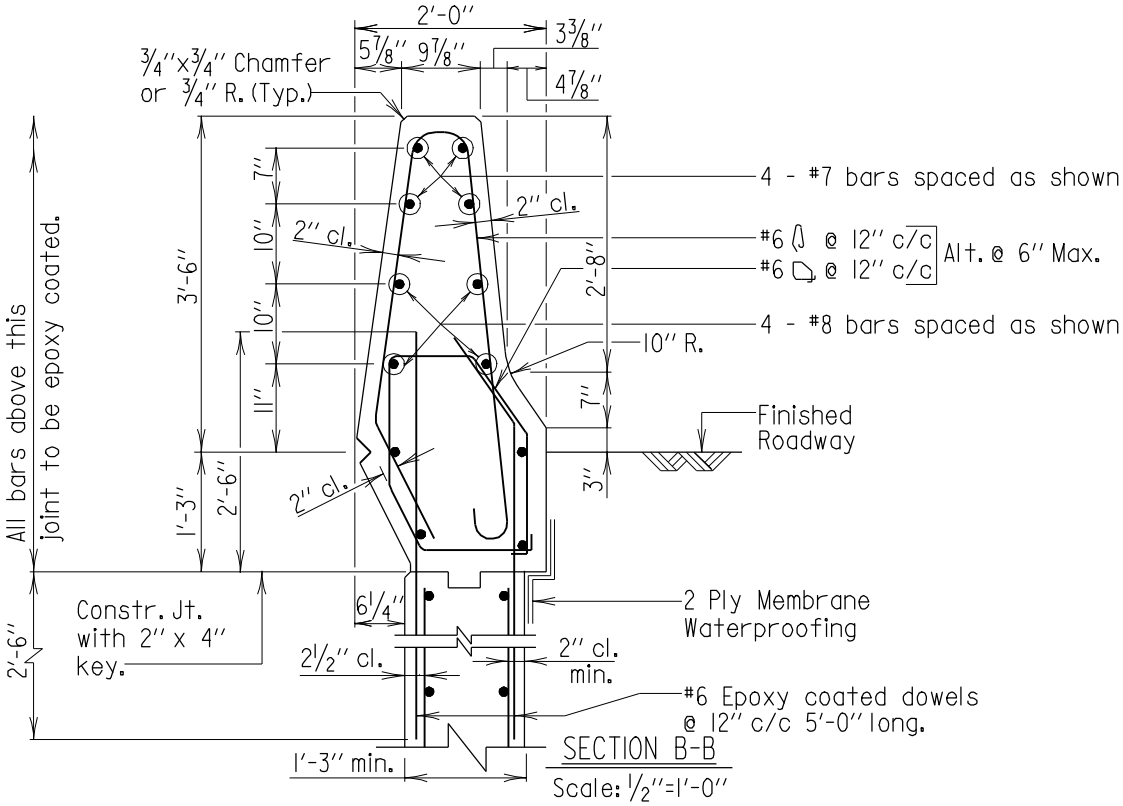

SECTION B-B

Scale: 1/2"=1'-0"

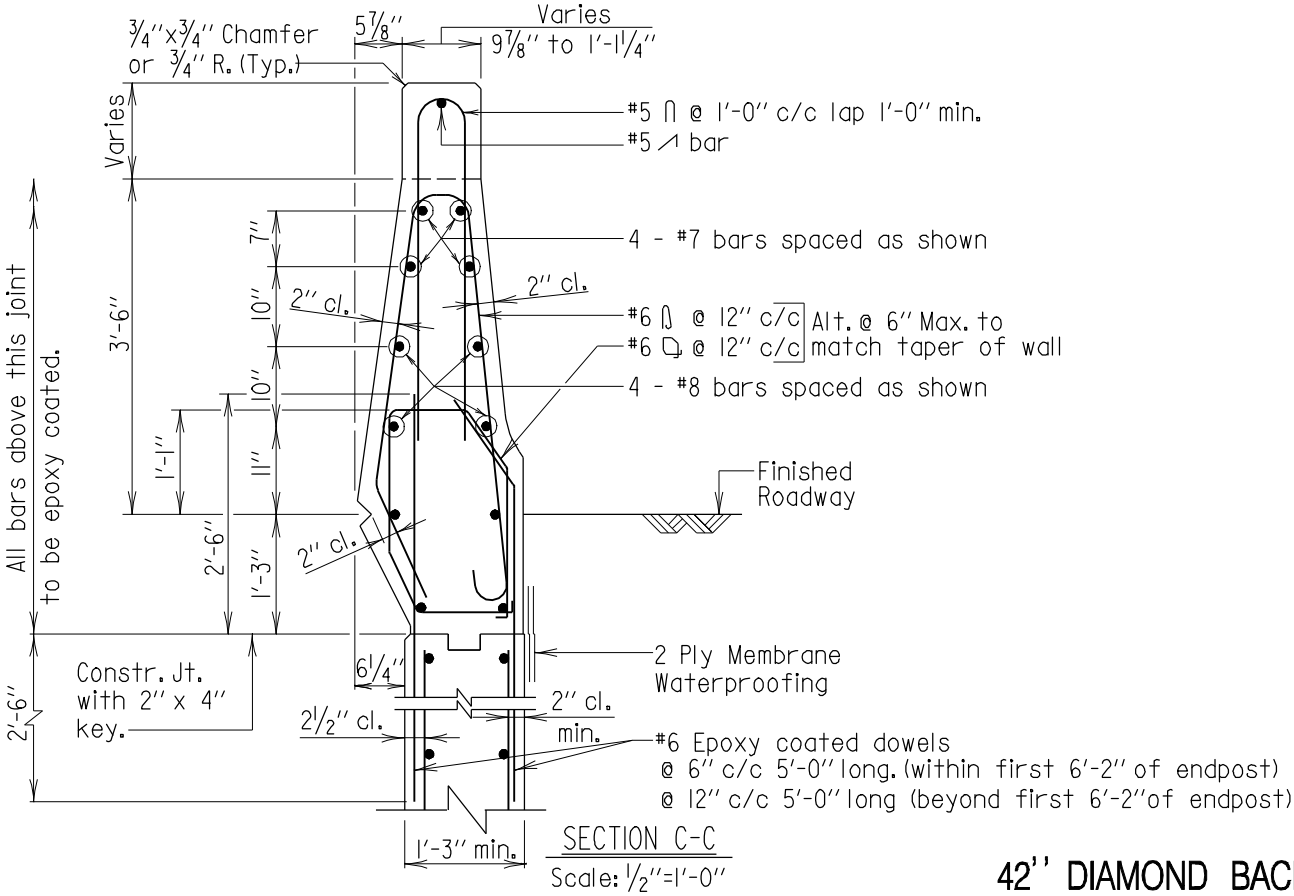

SECTION C-C

Scale: 1/2"=1'-0"

42'' DIAMOND BACK

Note:
All longitudinal bars are #5 spaced as shown, unless noted otherwise.

APPROVAL
R.S. Freedman DIRECTOR OFFICE OF BRIDGE DEVEL.
DATE: 6/1/05

REVISIONS	
SHA	FHWA
11-14-05	

FHWA APPROVAL
DATE:

STATE OF MARYLAND
DEPARTMENT OF TRANSPORTATION
STATE HIGHWAY ADMINISTRATION
OFFICE OF BRIDGE DEVELOPMENT

42'' F-SHAPE PARAPET END POST WITH FENCING OR RAILING
APPROACH END, END POST LENGTH > 11'-2''

STANDARD NO. BR-SB(6.53)-05-368 SHEET 3 OF 4

SUBSTRUCTURE ABUT.

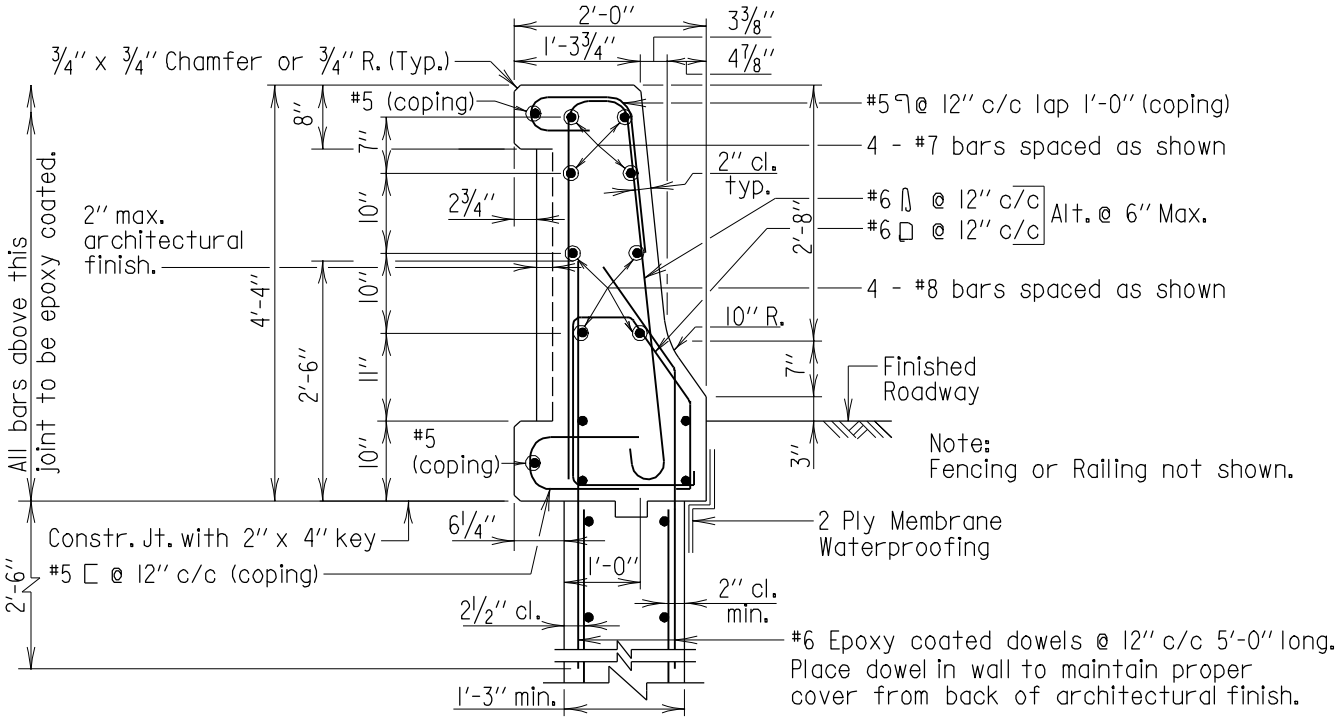

SECTION B-B

Scale: 1/2"=1'-0"

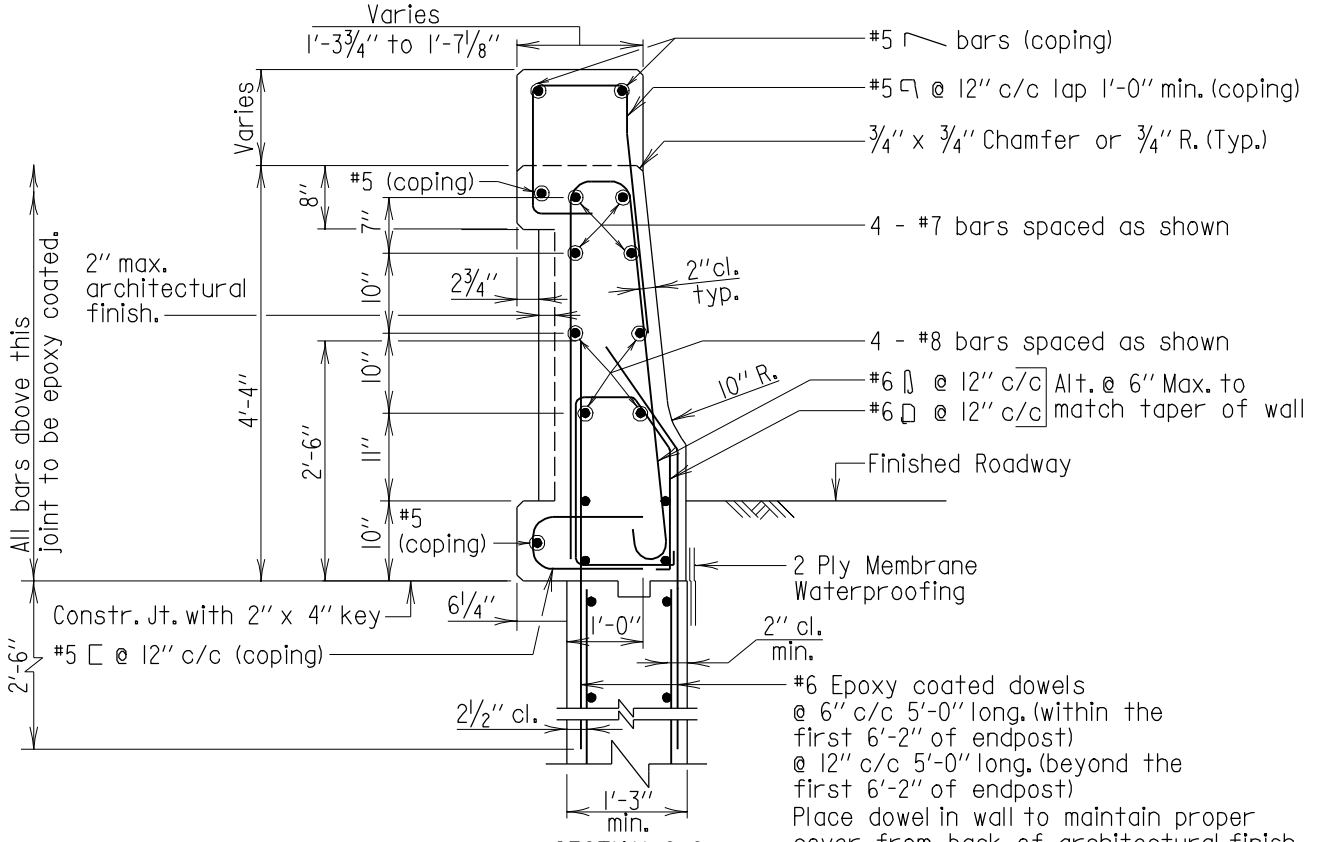

SECTION C-C

Scale: 1/2"=1'-0"

42" RECESSED BACK

Note:
All longitudinal bars are #5 spaced as shown, unless noted otherwise.

APPROVAL	
R.S. Freedman DIRECTOR OFFICE OF BRIDGE DEVEL. DATE: 6/1/05	
REVISIONS	
SHA	FHWA
11-14-05	·
12-12-08	·
·	·
·	·

FHWA APPROVAL
DATE:

STATE OF MARYLAND
DEPARTMENT OF TRANSPORTATION
STATE HIGHWAY ADMINISTRATION
OFFICE OF BRIDGE DEVELOPMENT

42" F-SHAPE PARAPET END POST WITH FENCING OR RAILING
APPROACH END, END POST LENGTH > 11'-2"

STANDARD NO. BR-SB(6.53)-05-368 SHEET 3 OF 4

SUBSTRUCTURE ABUT.

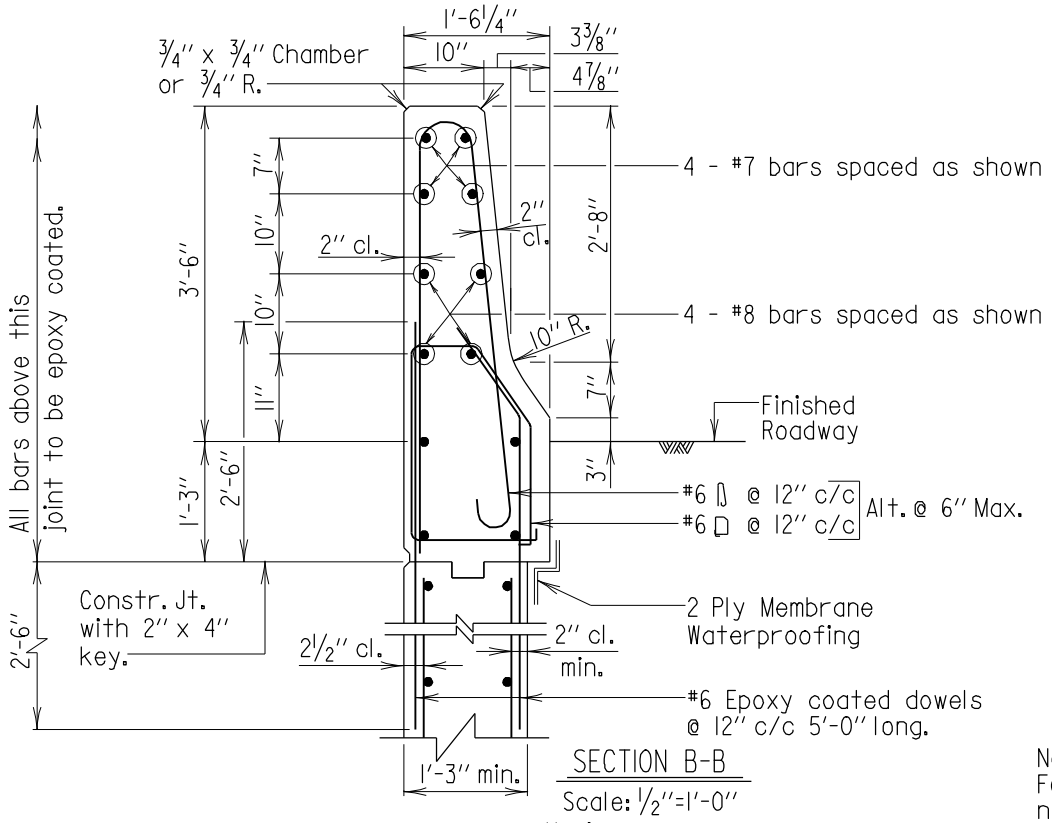

SECTION B-B

Scale: 1/2"=1'-0"

Note:
Fencing or Railing
not shown.

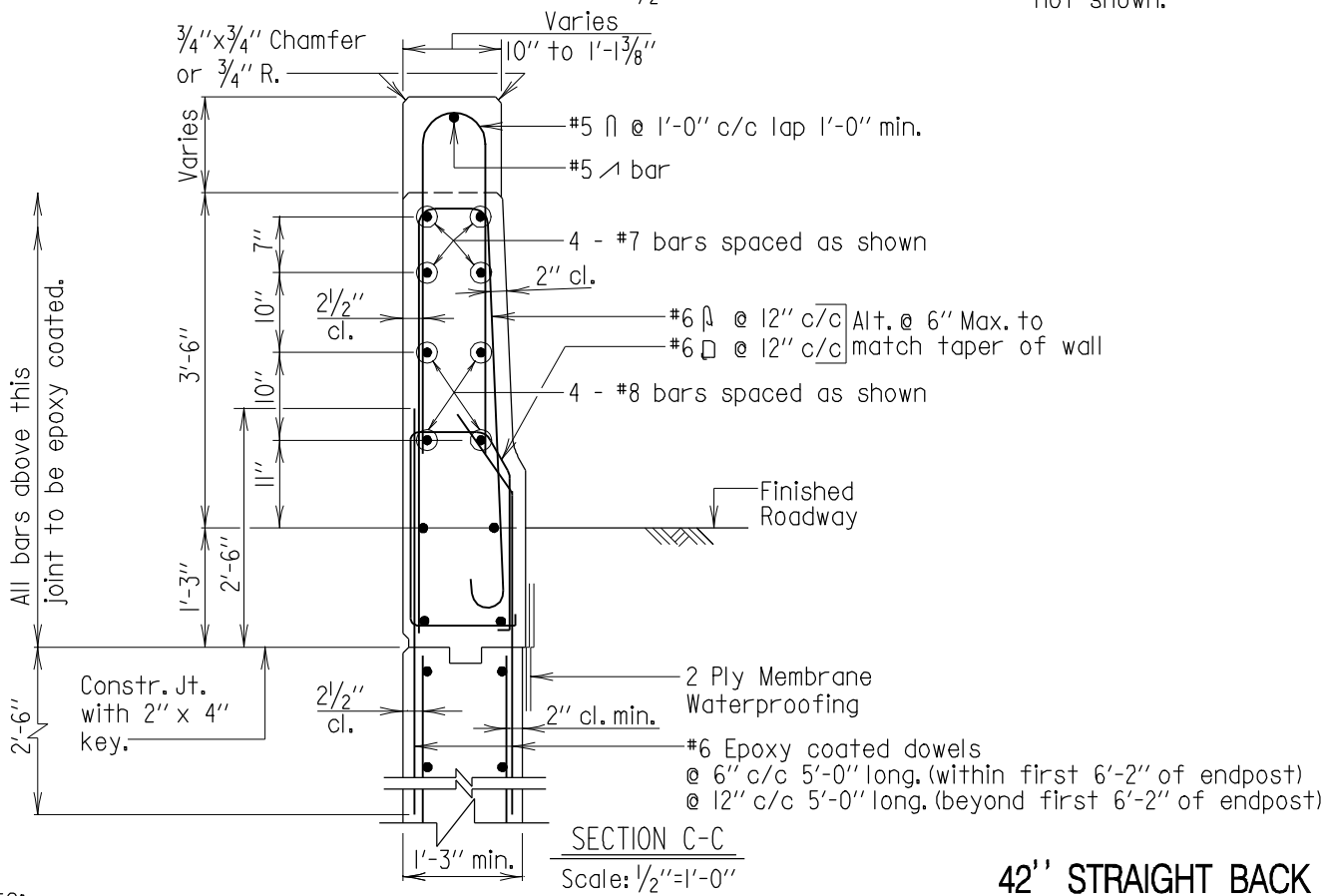

SECTION C-C

Scale: 1/2"=1'-0"

42" STRAIGHT BACK

Note:
All longitudinal bars are #5 spaced as shown, unless noted otherwise.

APPROVAL	
R S Freedman DIRECTOR OFFICE OF BRIDGE DEVEL. DATE: 6/1/05	
REVISIONS	
SHA	FHWA
11-14-05	

FHWA APPROVAL
DATE:

STATE OF MARYLAND
DEPARTMENT OF TRANSPORTATION
STATE HIGHWAY ADMINISTRATION
OFFICE OF BRIDGE DEVELOPMENT

42" F-SHAPE PARAPET END POST WITH
FENCING OR RAILING
APPROACH END, END POST LENGTH > 11'-2"

STANDARD NO. BR-SB(6.53)-05-368 SHEET 3 OF 4

SUBSTRUCTURE ABUT.

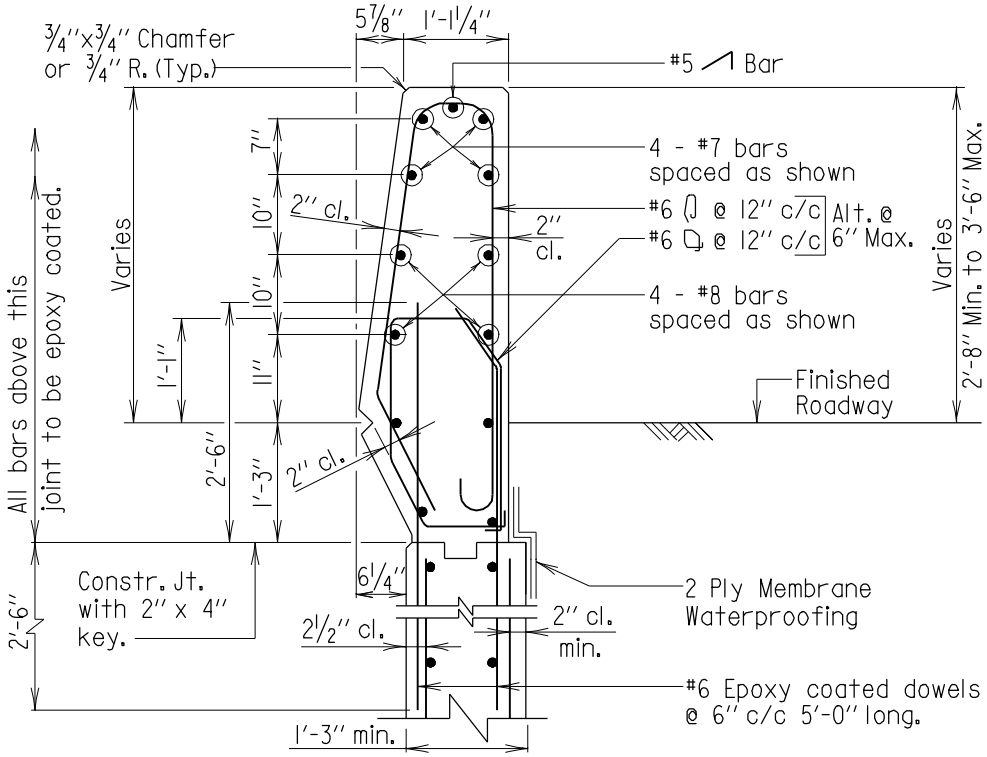

Note:
All longitudinal bars are #5 spaced as shown, unless noted otherwise.

SECTION D-D
Scale: 1/2"=1'-0"

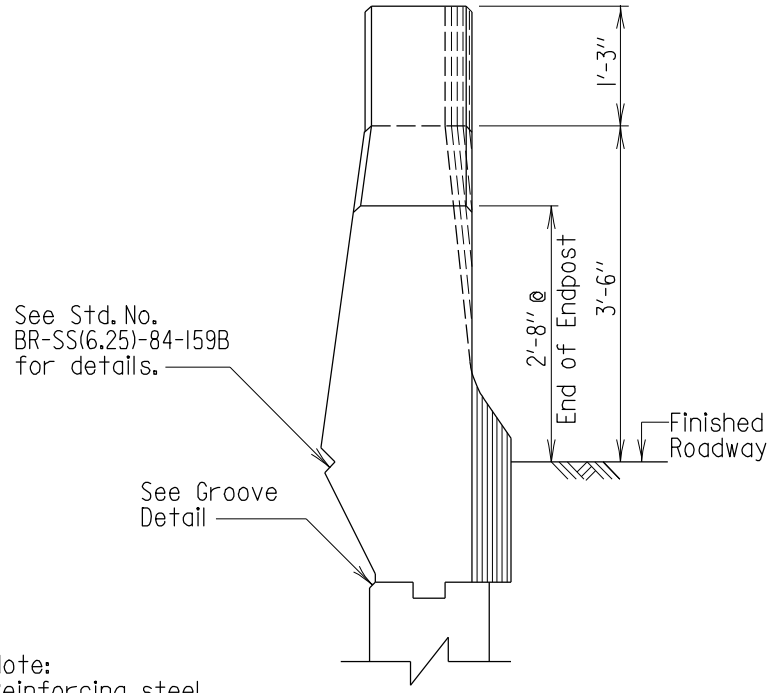

Note:
Reinforcing steel not shown.

VIEW E-E
Scale: 1/2"=1'-0"

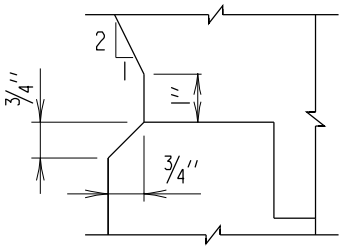

GROOVE DETAIL
Scale: 3"=1'-0"

42" DIAMOND BACK

APPROVAL	
R.S. Freedman DIRECTOR OFFICE OF BRIDGE DEVEL. DATE: 6/1/05	
REVISIONS	
SHA	FHWA
11-14-05	

FHWA APPROVAL
DATE:

STATE OF MARYLAND
DEPARTMENT OF TRANSPORTATION
STATE HIGHWAY ADMINISTRATION
OFFICE OF BRIDGE DEVELOPMENT

42" F-SHAPE PARAPET END POST WITH FENCING OR RAILING
APPROACH END, END POST LENGTH > 11'-2"

STANDARD NO. BR-SB(6.53)-05-368 SHEET 4 OF 4

SUBSTRUCTURE ABUT.

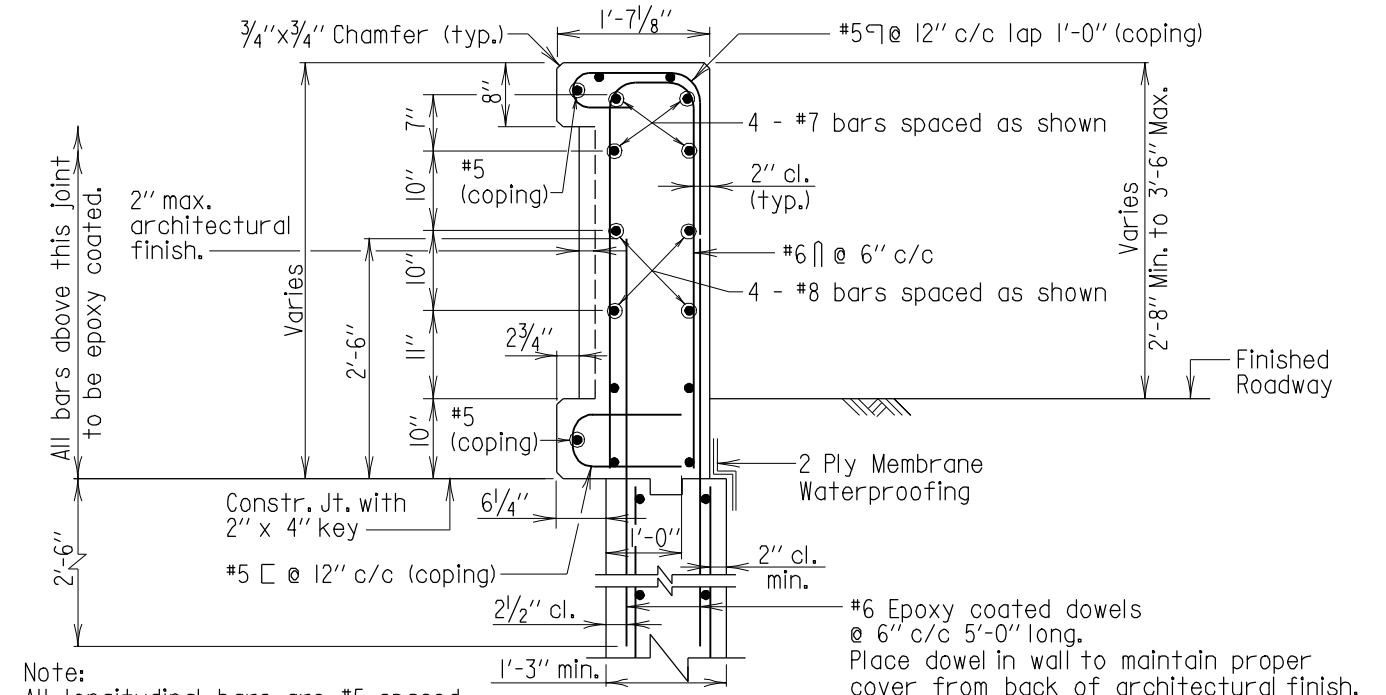

Note:
All longitudinal bars are #5 spaced as shown, unless noted otherwise.

SECTION D-D
Scale: 1/2"=1'-0"

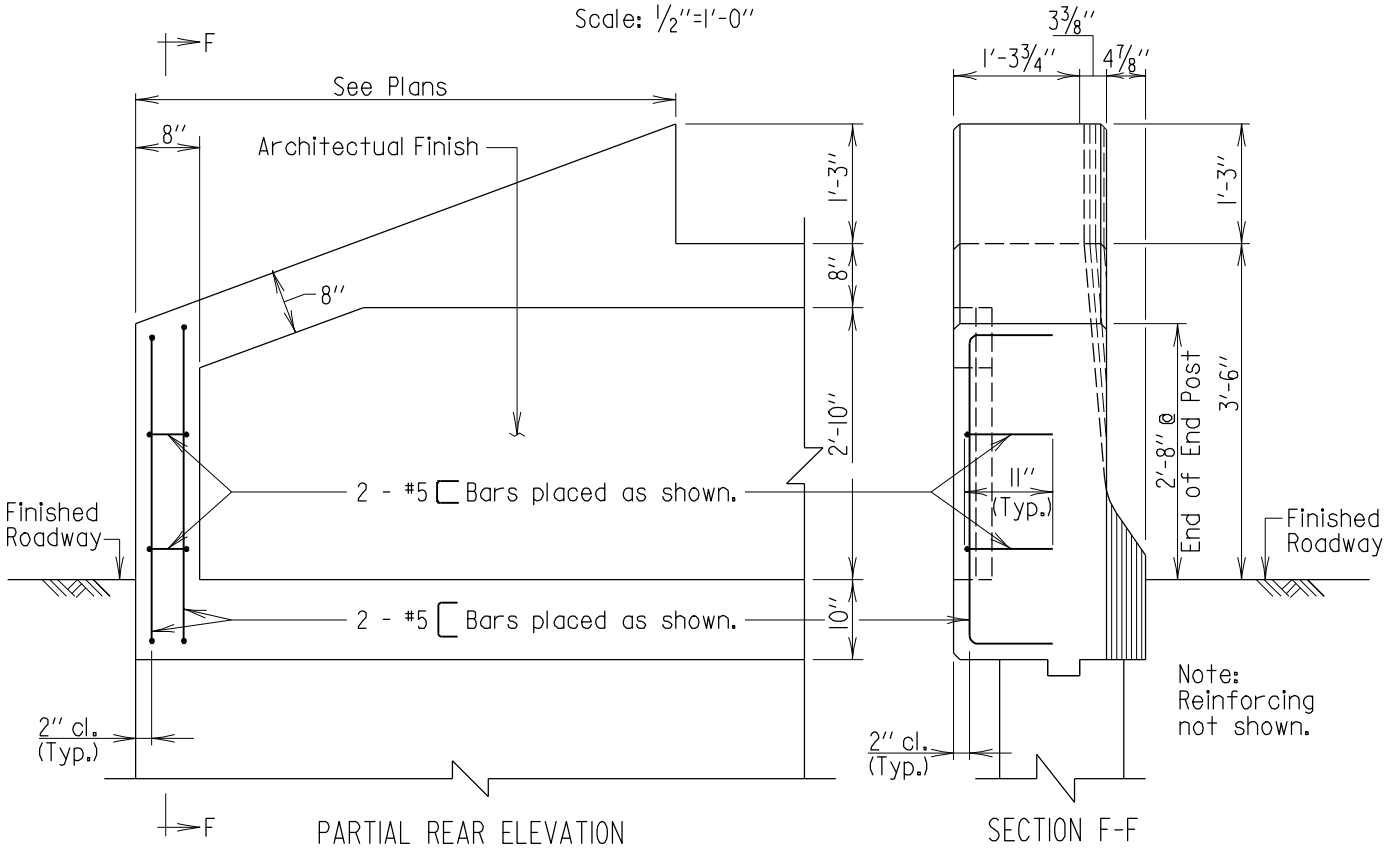

PARTIAL REAR ELEVATION
Scale: 1/2"=1'-0"

SECTION F-F
Scale: 1/2"=1'-0"

42" RECESSED BACK

Notes:
1. Taper of coping to begin at concrete lug.
2. There is no View E-E for the 42" Recessed Back End Post.

APPROVAL	
R S Freedman DIRECTOR OFFICE OF BRIDGE DEVEL. DATE: 6/1/05	
REVISIONS	
SHA	FHWA
11-14-05	

FHWA APPROVAL
DATE:

STATE OF MARYLAND
DEPARTMENT OF TRANSPORTATION
STATE HIGHWAY ADMINISTRATION
OFFICE OF BRIDGE DEVELOPMENT

42" F-SHAPE PARAPET END POST WITH FENCING OR RAILING
APPROACH END, END POST LENGTH > 11'-2"

STANDARD NO. BR-SB(6.53)-05-368 SHEET 4 OF 4

SUBSTRUCTURE ABUT.

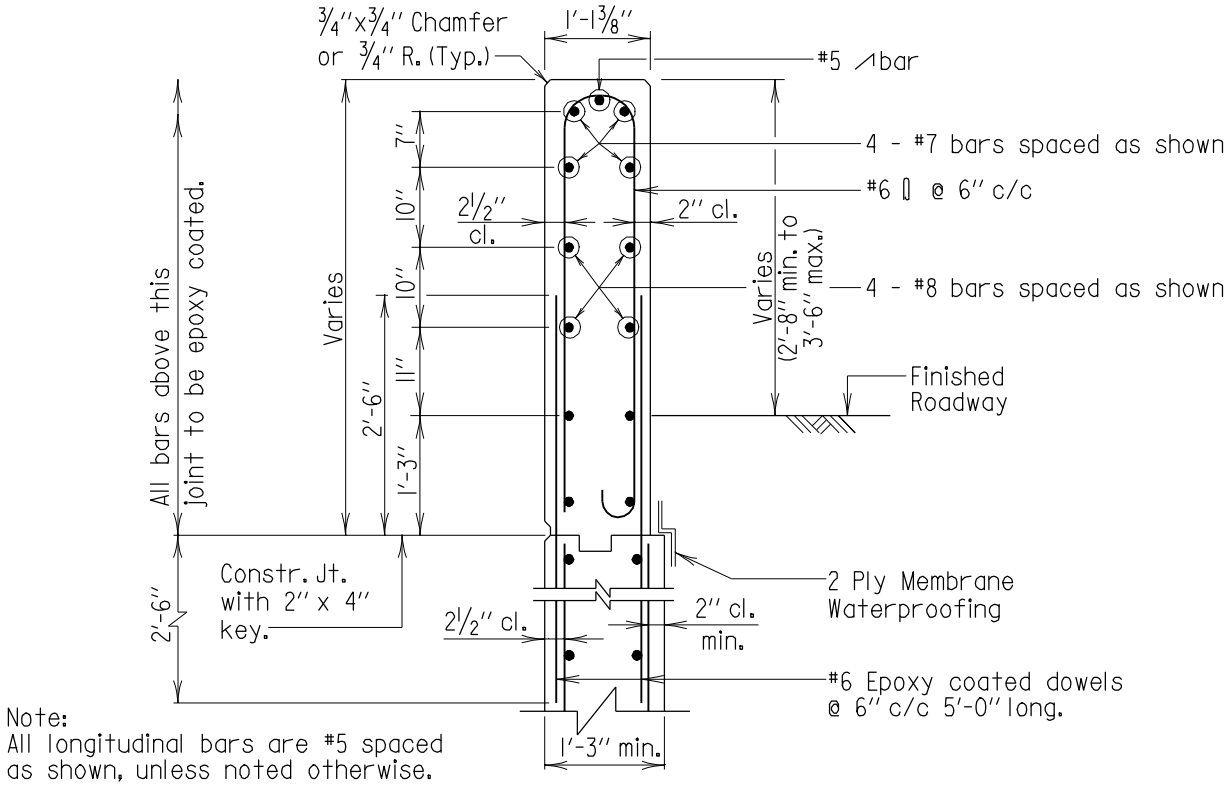

Note:
All longitudinal bars are #5 spaced as shown, unless noted otherwise.

SECTION D-D

Scale: 1/2"=1'-0"

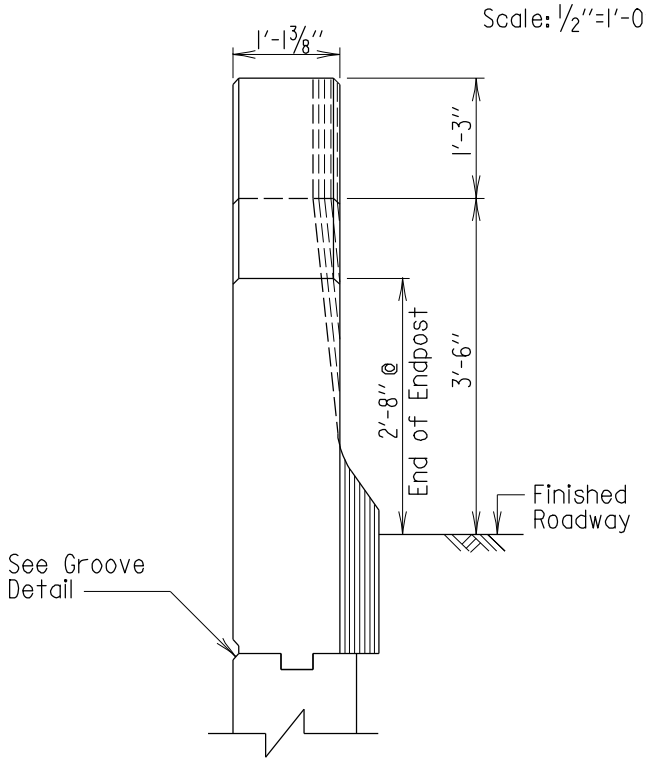

Note:
Reinforcing steel not shown.

VIEW E-E

Scale: 1/2"=1'-0"

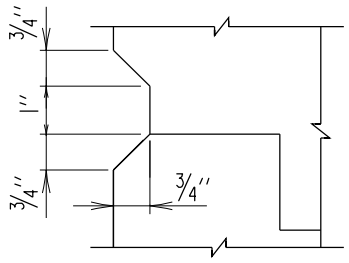

GROOVE DETAIL

Scale: 3"=1'-0"

42" STRAIGHT BACK

APPROVAL	
R S Friedman DIRECTOR OFFICE OF BRIDGE DEVEL. DATE: 6/1/05	
REVISIONS	
SHA	FHWA
11-14-05	

FHWA APPROVAL
DATE:

STATE OF MARYLAND
DEPARTMENT OF TRANSPORTATION
STATE HIGHWAY ADMINISTRATION
OFFICE OF BRIDGE DEVELOPMENT

42" F-SHAPE PARAPET END POST WITH FENCING OR RAILING
APPROACH END, END POST LENGTH > 11'-2"

STANDARD NO. BR-SB(6.53)-05-368 SHEET 4 OF 4

SUBSTRUCTURE ABUT.

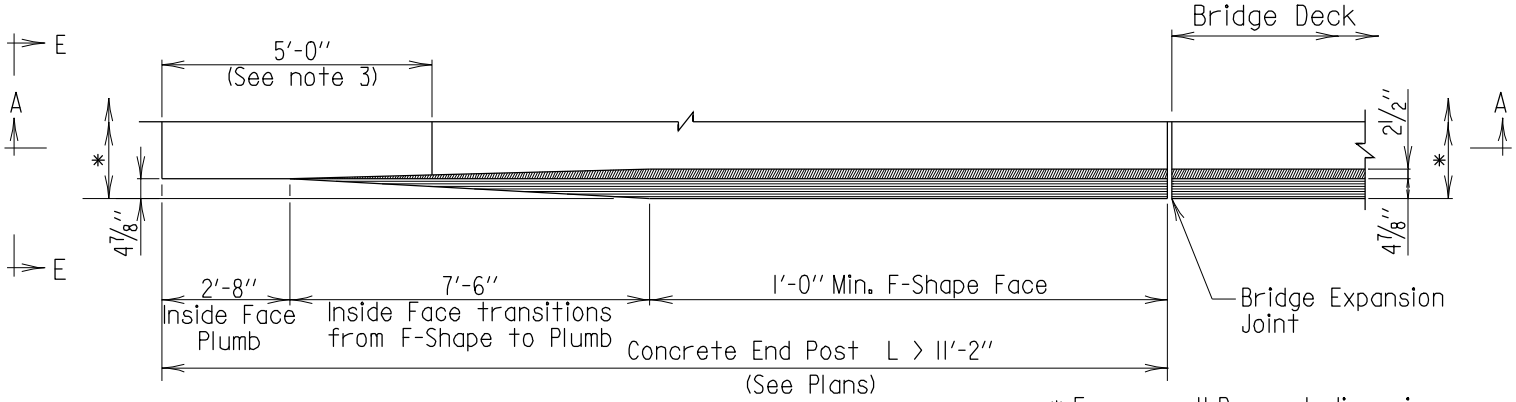

* For overall Parapet dimensions, see sheets 3 and 4 of 4.

PLAN

Scale: 1/4"=1'-0"

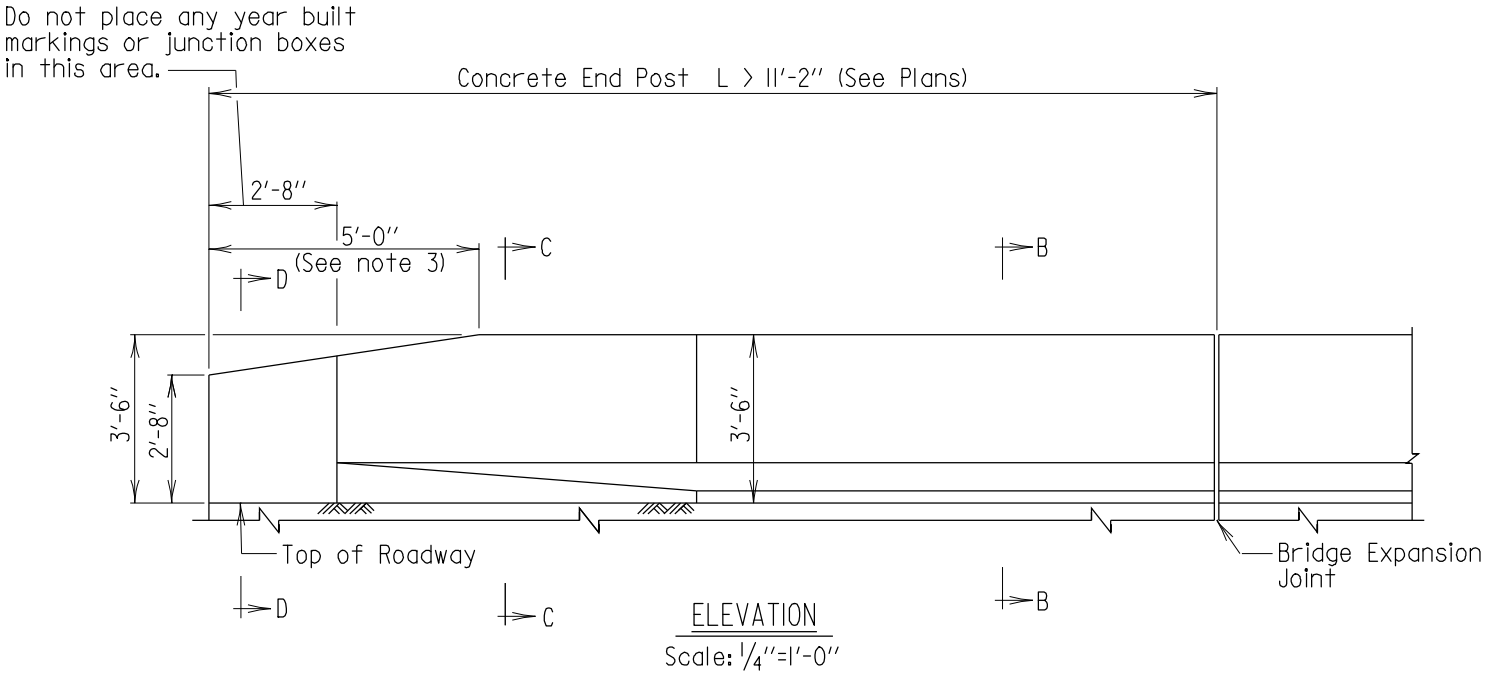

ELEVATION

Scale: 1/4"=1'-0"

Notes:
1. Use on the approach end of bridge when end post length is greater than 11'-2".
2. Thrie Beam Traffic Barrier not shown.
3. Taper barrier height to 2'-8" when Thrie Beam is required. Continue at 3'-6" and eliminate transition of F-Shape when adjacent to concrete F-Shape barrier.

Note to Designer:
This standard contains details for straight back, diamond back and recessed back parapets. Include the appropriate shape in the Contract Plans.

FHWA APPROVAL
DATE:

APPROVAL
DIRECTOR
OFFICE OF BRIDGE DEVEL.
DATE: 6/1/05

REVISIONS
SHA
FHWA

STATE OF MARYLAND
DEPARTMENT OF TRANSPORTATION
STATE HIGHWAY ADMINISTRATION
OFFICE OF BRIDGE DEVELOPMENT

42" F-SHAPE PARAPET END POST WITHOUT FENCING OR RAILING
APPROACH END, END POST LENGTH > 11'-2"

STANDARD NO. BR-SB(6.54)-05-369

SHEET 1 OF 4

SUBSTRUCTURE ABUT.

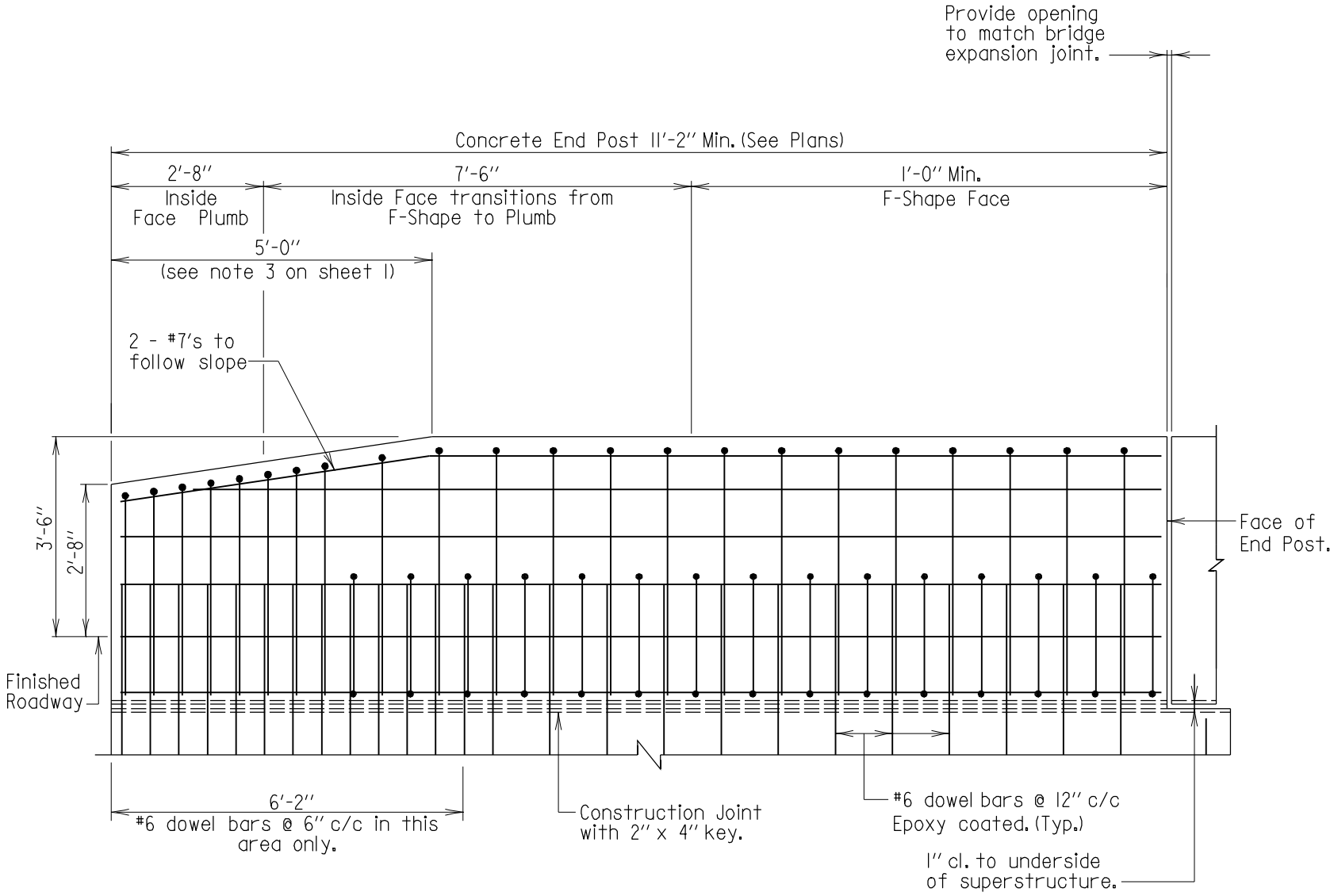

SECTION A-A

Scale: 3/8"=1'-0"

Notes:
1. For Parapet Reinforcing Details, see sheets 3 and 4.
2. If applicable, reinforcing for coping not shown.

Note to Designer:
This standard contains details for straight back, diamond back and recessed back parapets. Include the appropriate shape in the Contract Plans.

APPROVAL
OFFICE OF BRIDGE DEVEL. DIRECTOR
DATE: 6/1/05

REVISIONS

SHA	FHWA
11-14-05	

FHWA APPROVAL
DATE:

STATE OF MARYLAND
DEPARTMENT OF TRANSPORTATION
STATE HIGHWAY ADMINISTRATION
OFFICE OF BRIDGE DEVELOPMENT

42" F-SHAPE PARAPET END POST WITHOUT
FENCING OR RAILING
APPROACH END, END POST LENGTH > 11'-2"

STANDARD NO. BR-SB(6.54)-05-369 **SHEET** 2 **OF** 4

SUBSTRUCTURE ABUT.

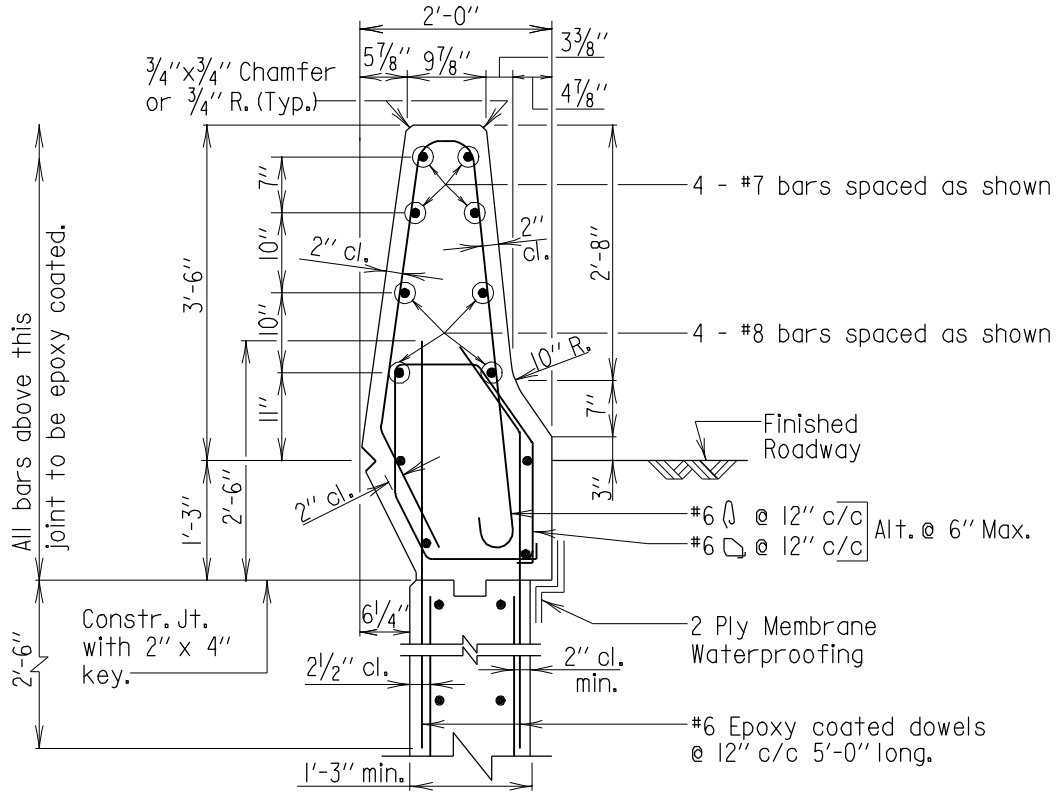

SECTION B-B

Scale: 1/2"=1'-0"

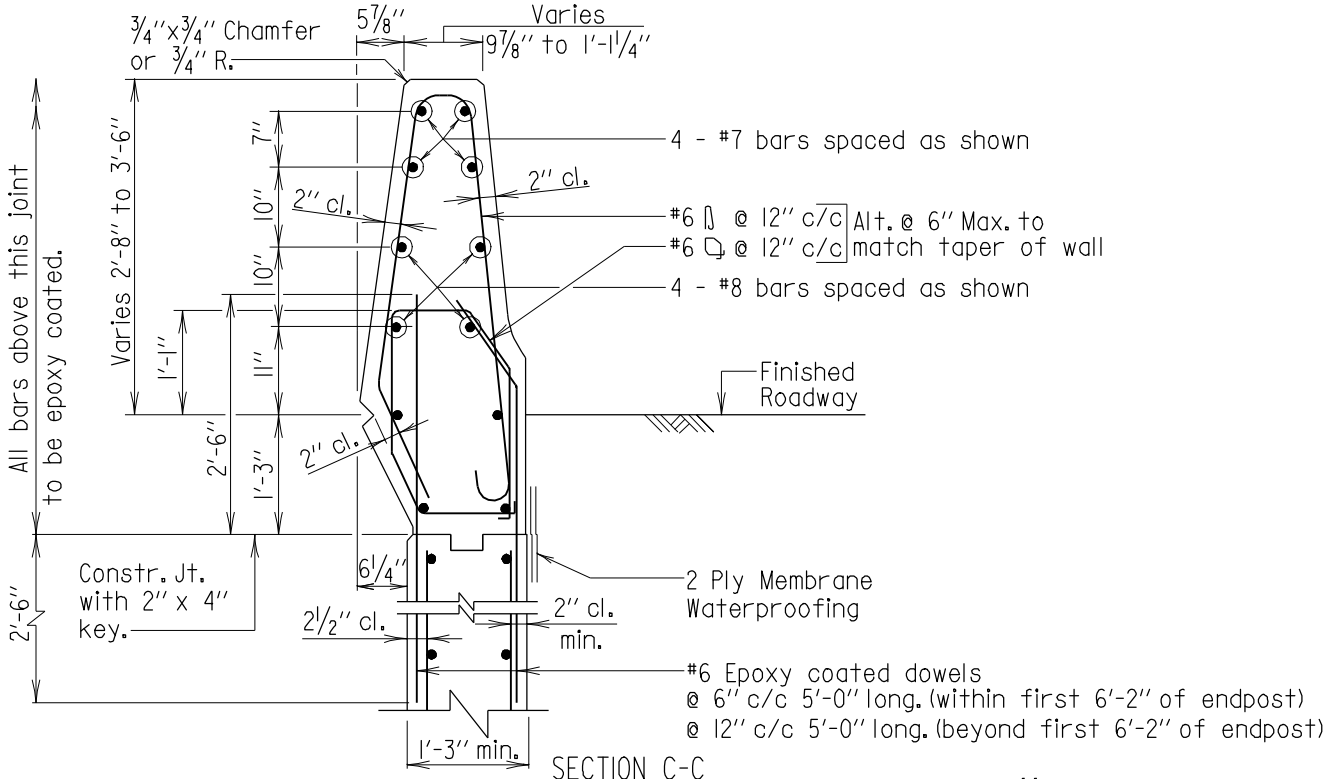

SECTION C-C

Scale: 1/2"=1'-0"

42" DIAMOND BACK

Note:
All longitudinal bars are #5 spaced as shown, unless noted otherwise.

APPROVAL	
R.S. Freedman DIRECTOR OFFICE OF BRIDGE DEVEL. DATE: 6/1/05	
REVISIONS	
SHA	FHWA
11-14-05	

FHWA APPROVAL
DATE:

STATE OF MARYLAND
DEPARTMENT OF TRANSPORTATION
STATE HIGHWAY ADMINISTRATION
OFFICE OF BRIDGE DEVELOPMENT

42" F-SHAPE PARAPET END POST WITHOUT FENCING OR RAILING
APPROACH END, END POST LENGTH > 11'-2"

STANDARD NO. BR-SB(6.54)-05-369 SHEET 3 OF 4

SUBSTRUCTURE ABUT.

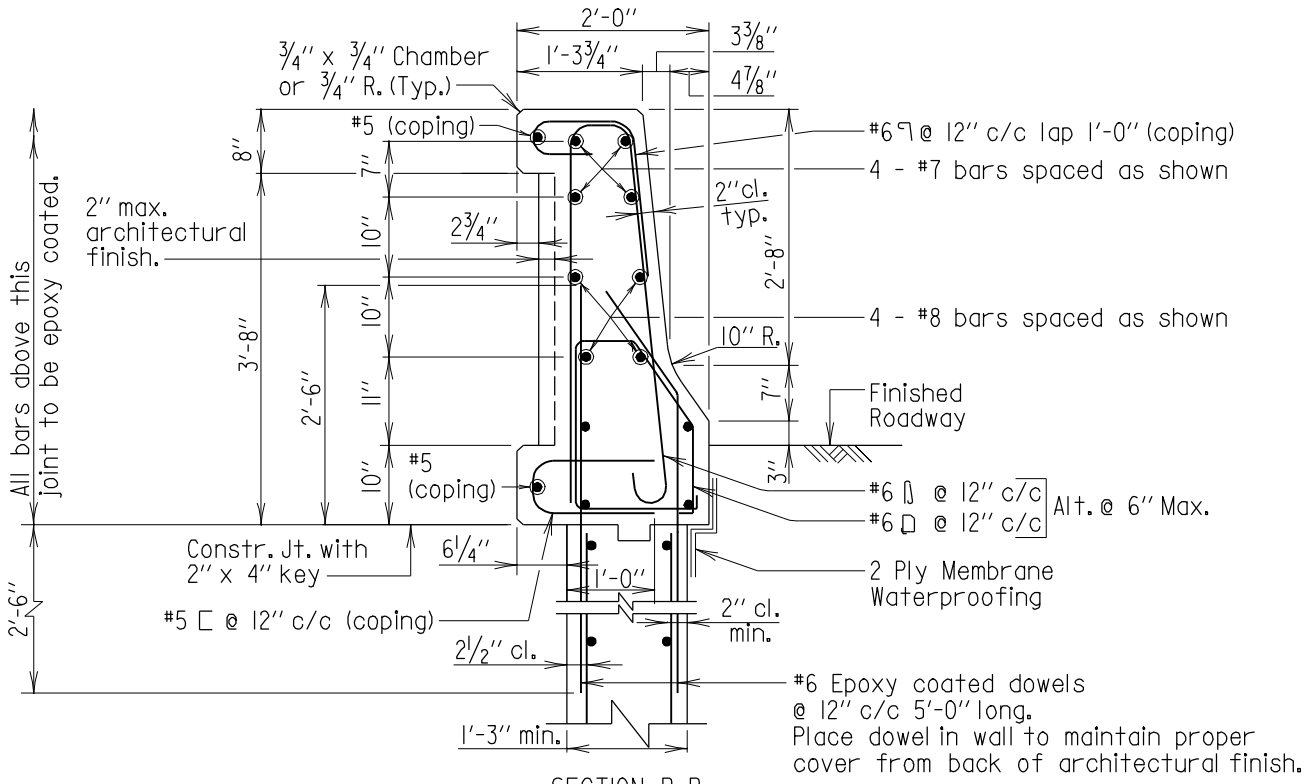

SECTION B-B

Scale: ½"=1'-0"

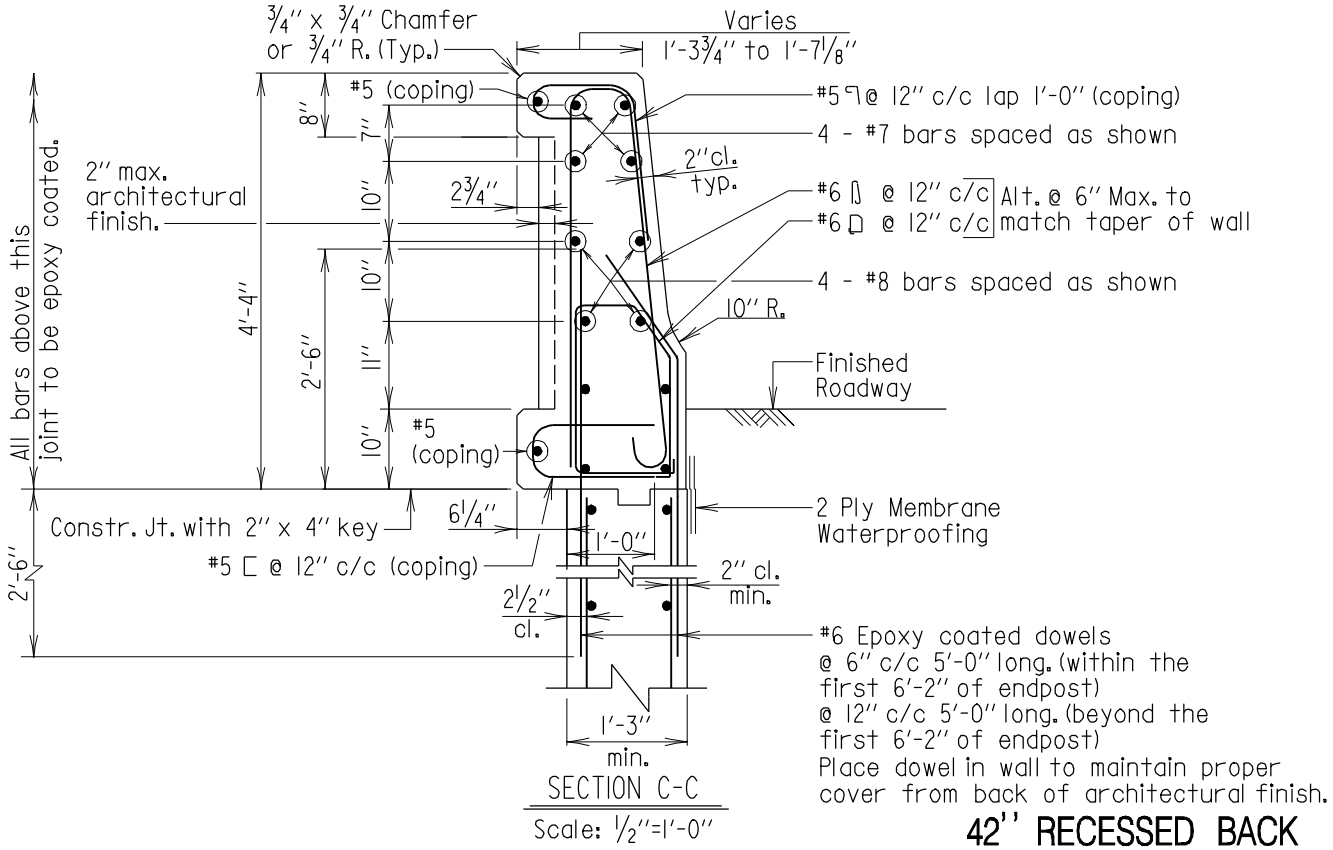

SECTION C-C

Scale: ½"=1'-0"

42" RECESSED BACK

Note:
All longitudinal bars are #5's placed as shown, unless noted otherwise.

APPROVAL	
R.S. Freedman DIRECTOR OFFICE OF BRIDGE DEVEL. DATE: 6/1/05	
REVISIONS	
SHA	FHWA
11-14-05	·
12-12-08	·
FHWA APPROVAL	· ·
DATE:	· ·

STATE OF MARYLAND
DEPARTMENT OF TRANSPORTATION
STATE HIGHWAY ADMINISTRATION
OFFICE OF BRIDGE DEVELOPMENT

42" F-SHAPE PARAPET END POST WITHOUT FENCING OR RAILING
APPROACH END, END POST LENGTH > 11'-2"

STANDARD NO. BR-SB(6.54)-05-369 SHEET 3 OF 4

SUBSTRUCTURE ABUT.

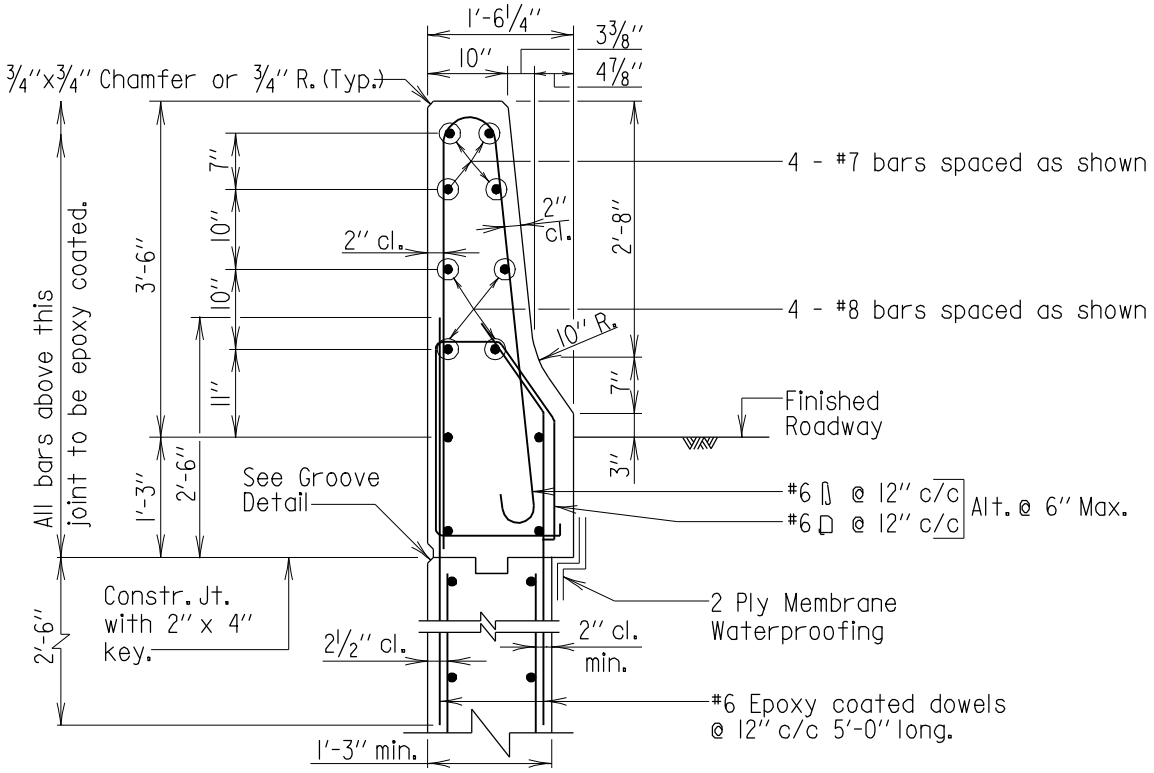

SECTION B-B

Scale: 1/2"=1'-0"

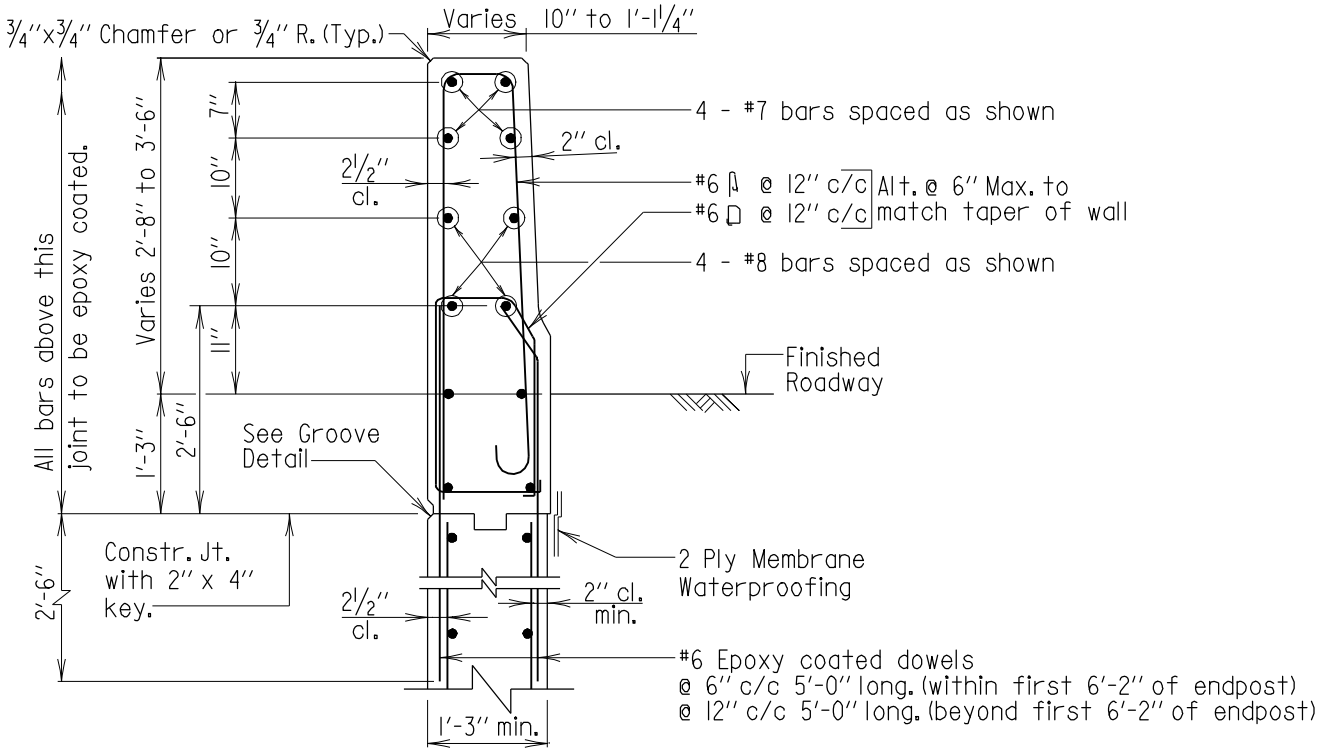

SECTION C-C

Scale: 1/2"=1'-0"

42" STRAIGHT BACK

Note:
All longitudinal bars are #5 spaced as shown, unless noted otherwise.

APPROVAL	
R S Freedman DIRECTOR OFFICE OF BRIDGE DEVEL. DATE: 6/1/05	
REVISIONS	
SHA	FHWA
11-14-05	

FHWA APPROVAL
DATE:

STATE OF MARYLAND
DEPARTMENT OF TRANSPORTATION
STATE HIGHWAY ADMINISTRATION
OFFICE OF BRIDGE DEVELOPMENT

42" F-SHAPE PARAPET END POST WITHOUT FENCING OR RAILING
APPROACH END, END POST LENGTH > 11'-2"

STANDARD NO. BR-SB(6.54)-05-369 SHEET 3 OF 4

SUBSTRUCTURE ABUT.

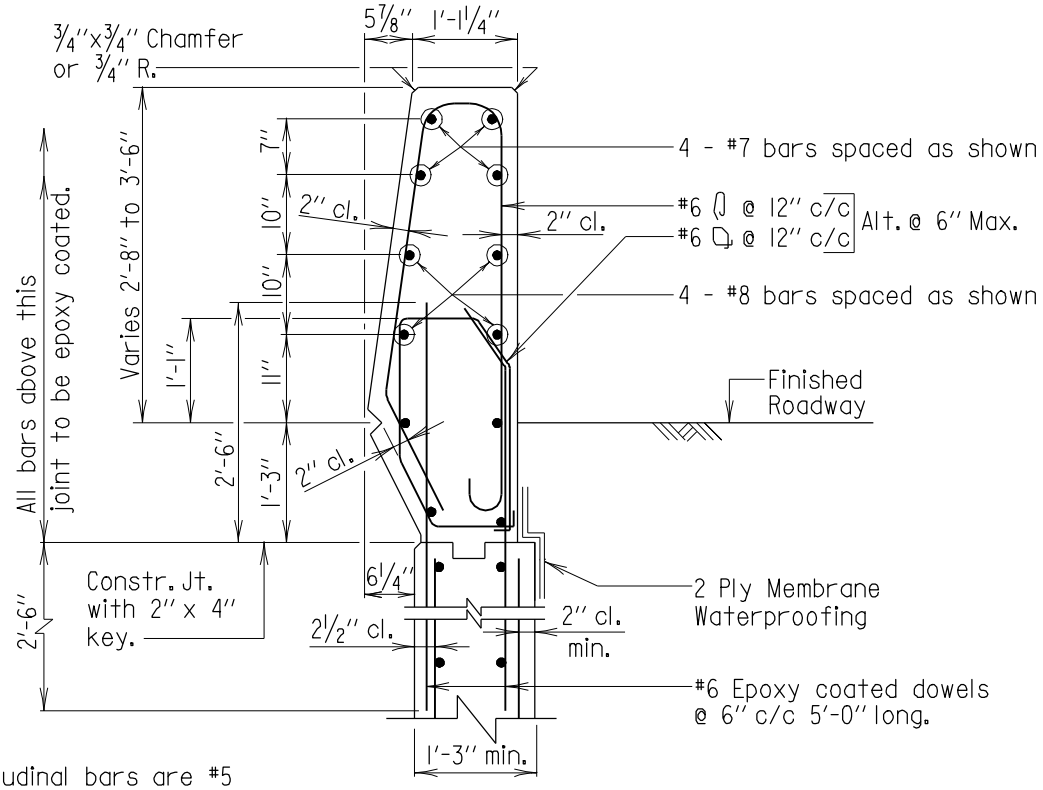

Note:
All longitudinal bars are #5 spaced as shown, unless noted otherwise.

SECTION D-D
Scale: 1/2"=1'-0"

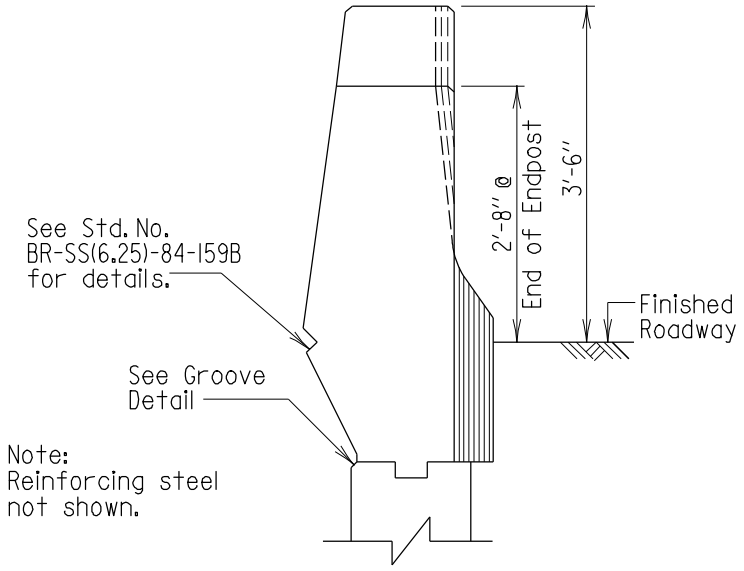

Note:
Reinforcing steel not shown.

VIEW E-E
Scale: 1/2"=1'-0"

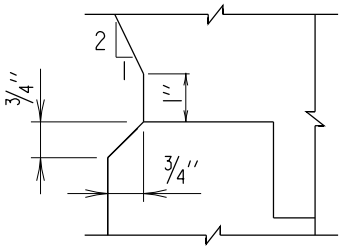

GROOVE DETAIL
Scale: 3"=1'-0"

42'' DIAMOND BACK

APPROVAL	
DIRECTOR OFFICE OF BRIDGE DEVEL. DATE: 6/1/05	
REVISIONS	
SHA	FHWA
11-14-05	

FHWA APPROVAL
DATE:

STATE OF MARYLAND
DEPARTMENT OF TRANSPORTATION
STATE HIGHWAY ADMINISTRATION
OFFICE OF BRIDGE DEVELOPMENT

42'' F-SHAPE PARAPET END POST WITHOUT FENCING OR RAILING
APPROACH END, END POST LENGTH > 11'-2''

STANDARD NO. BR-SB(6.54)-05-369 SHEET 4 OF 4

SUBSTRUCTURE ABUT.

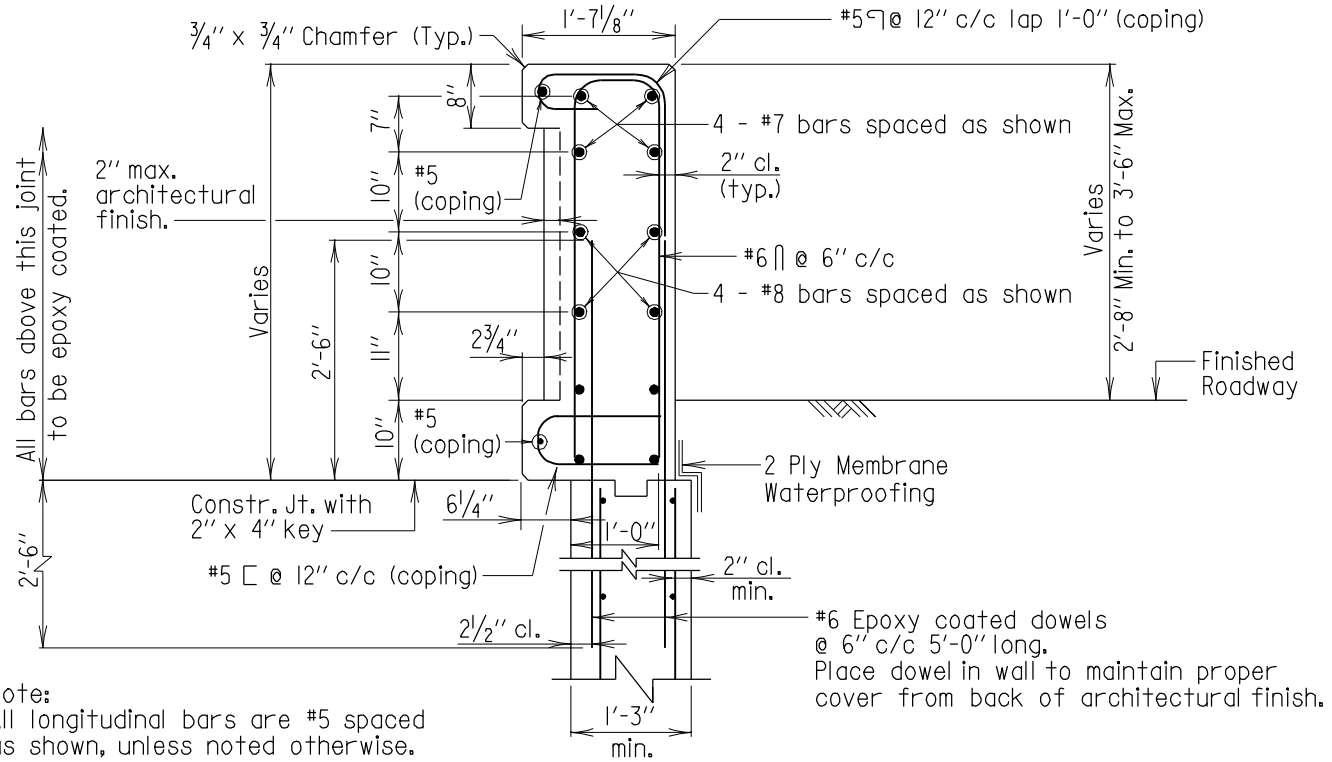

Note:
All longitudinal bars are #5 spaced as shown, unless noted otherwise.

SECTION D-D

Scale: 1/2''=1'-0''

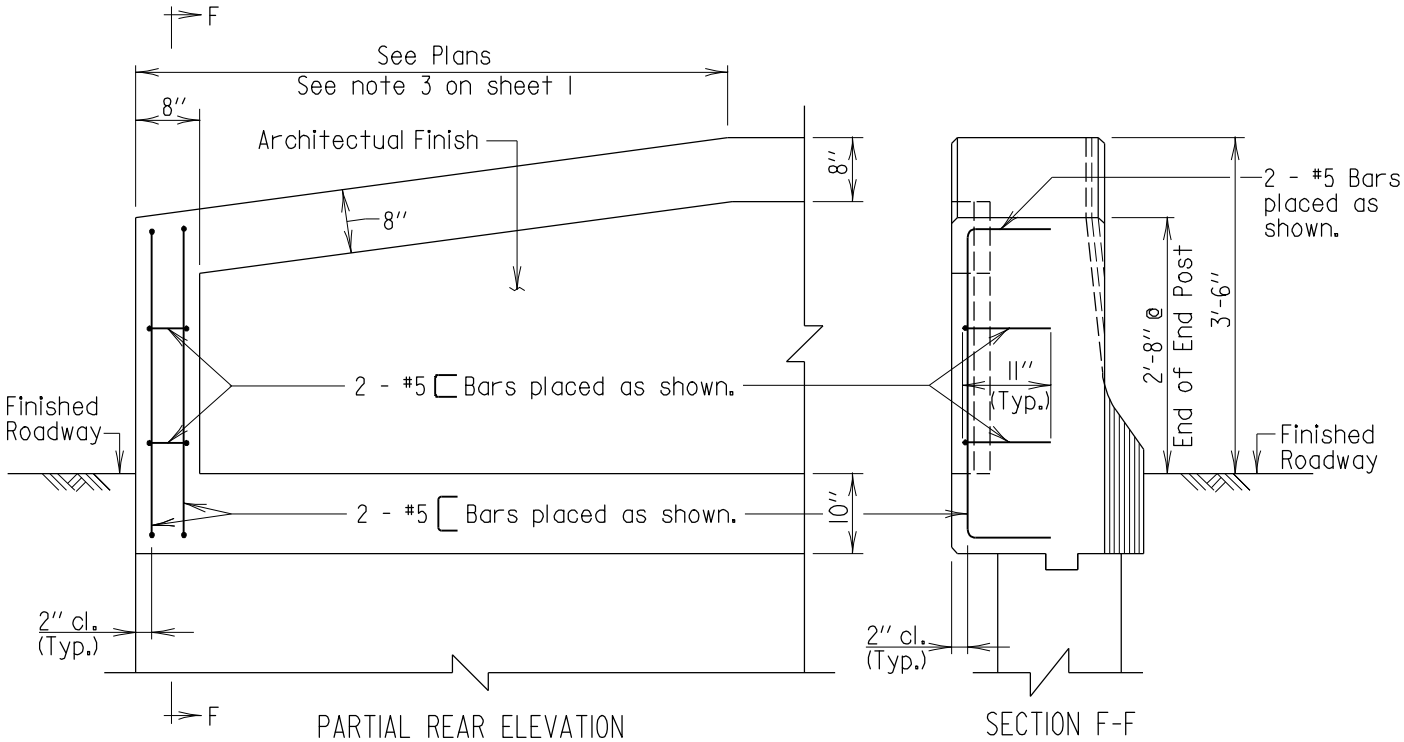

PARTIAL REAR ELEVATION

Scale: 1/2''=1'-0''

SECTION F-F

Scale: 1/2''=1'-0''

42'' RECESSED BACK

Notes:
1. Reinforcing steel not shown.
2. There is no View E-E for the 42'' Recessed Back End Post.

APPROVAL	
DIRECTOR OFFICE OF BRIDGE DEVEL. DATE: 6/1/05	
REVISIONS	
SHA	FHWA
11-14-05	

FHWA APPROVAL
DATE:

STATE OF MARYLAND
DEPARTMENT OF TRANSPORTATION
STATE HIGHWAY ADMINISTRATION
OFFICE OF BRIDGE DEVELOPMENT

42'' F-SHAPE PARAPET END POST WITHOUT FENCING OR RAILING
APPROACH END, END POST LENGTH > 11'-2''

STANDARD NO. BR-SB(6.54)-05-369 SHEET 4 OF 4

SUBSTRUCTURE ABUT.

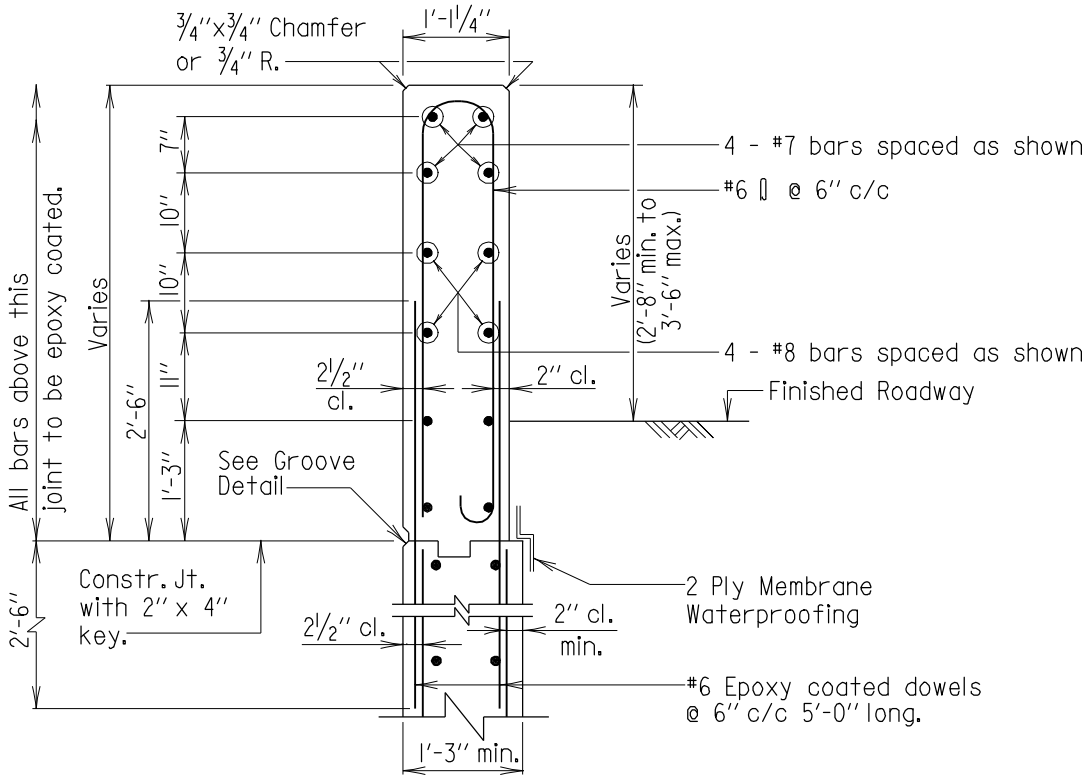

Note:
All longitudinal bars are
#5 spaced as shown, unless
noted otherwise.

SECTION D-D

Scale: 1/2''=1'-0''

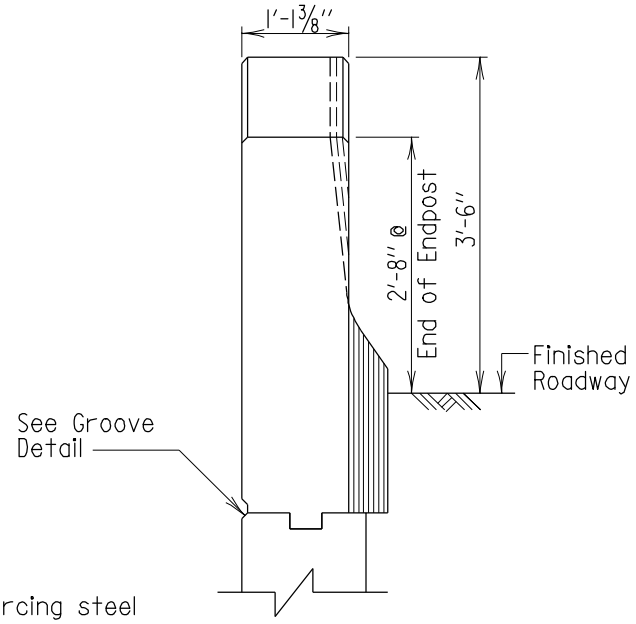

Note:
Reinforcing steel
not shown.

VIEW E-E

Scale: 1/2''=1'-0''

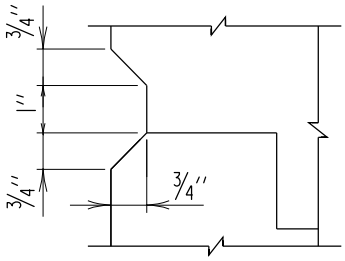

GROOVE DETAIL

Scale: 3''=1'-0''

42'' STRAIGHT BACK

APPROVAL	
DIRECTOR OFFICE OF BRIDGE DEVEL.	
DATE: 6/1/05	
REVISIONS	
SHA	FHWA
11-14-05	

FHWA APPROVAL
DATE:

STATE OF MARYLAND
DEPARTMENT OF TRANSPORTATION
STATE HIGHWAY ADMINISTRATION
OFFICE OF BRIDGE DEVELOPMENT

42'' F-SHAPE PARAPET END POST WITHOUT
FENCING OR RAILING
APPROACH END, END POST LENGTH > 11'-2''

STANDARD NO. BR-SB(6.54)-05-369 SHEET 4 OF 4

SUBSTRUCTURE ABUT.

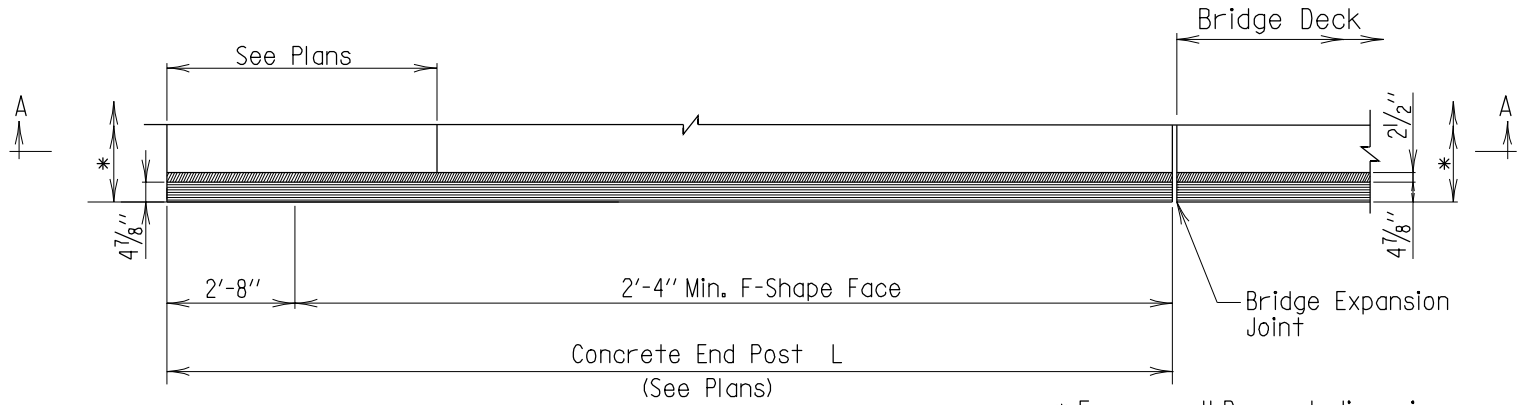

* For overall Parapet dimensions, see sheets 3 and 4 of 4.

PLAN

Scale: 1/4''=1'-0''

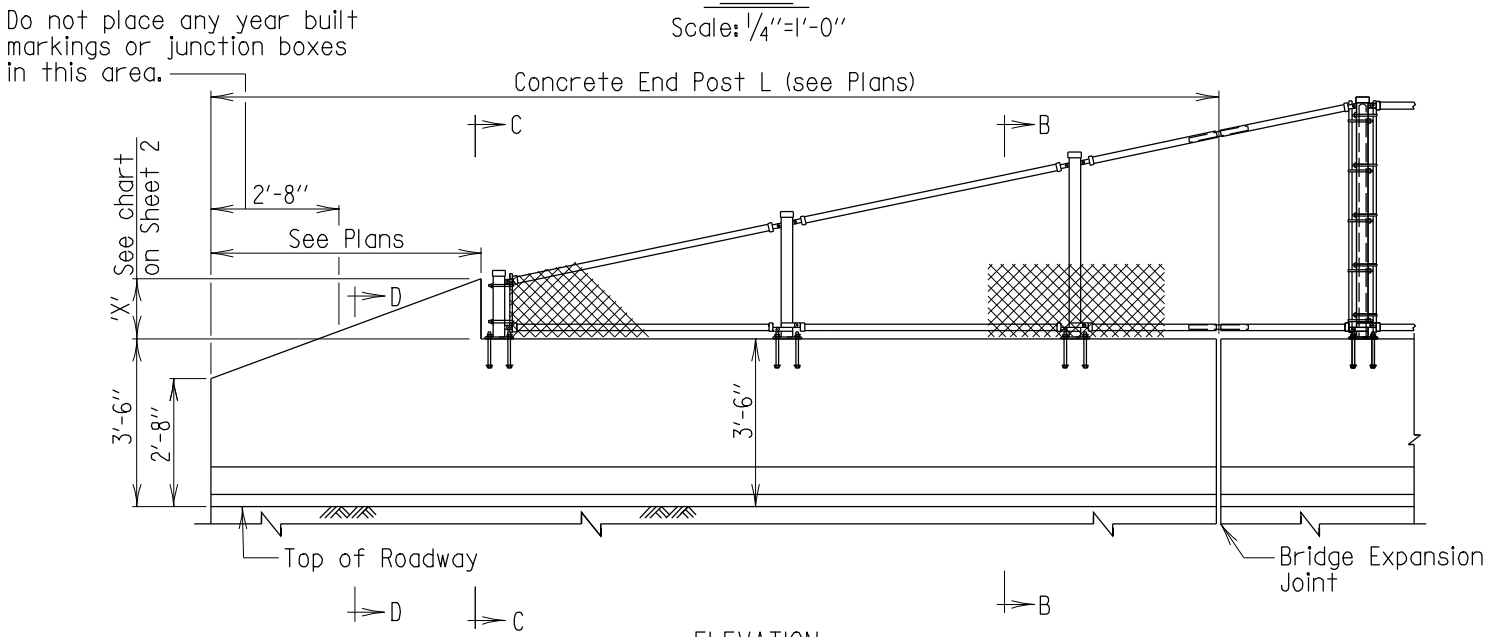

ELEVATION

Scale: 1/4''=1'-0''

Notes:

1. Use on the trail end of one way bridges.
2. W-Beam Traffic Barrier not shown.
3. Type II fence shown, see Plans for fence or railing layout and details.
4. Taper barrier height to 2'-8'' when Thrie Beam is required. Taper barrier height to 3'-6'' when adjacent to concrete F-Shape Barrier.

Note to Designer:
This standard contains details for straight back, diamond back and recessed back parapets. Include the appropriate shape in the Contract Plans.

FHWA APPROVAL
DATE:

APPROVAL
DIRECTOR
OFFICE OF BRIDGE DEVEL.
DATE: 6/1/05

REVISIONS
SHA
FHWA

STATE OF MARYLAND
DEPARTMENT OF TRANSPORTATION
STATE HIGHWAY ADMINISTRATION
OFFICE OF BRIDGE DEVELOPMENT

42'' F-SHAPE PARAPET END POST WITH FENCING OR RAILING TRAIL END

STANDARD NO. BR-SB(6.55)-05-370

SHEET 1 OF 4

SUBSTRUCTURE ABUT.

'X'	Fence or Railing Type
1'-0''	One Strand Railing
1'-3''	Type II Fence
1'-9''	Two Strand Railing

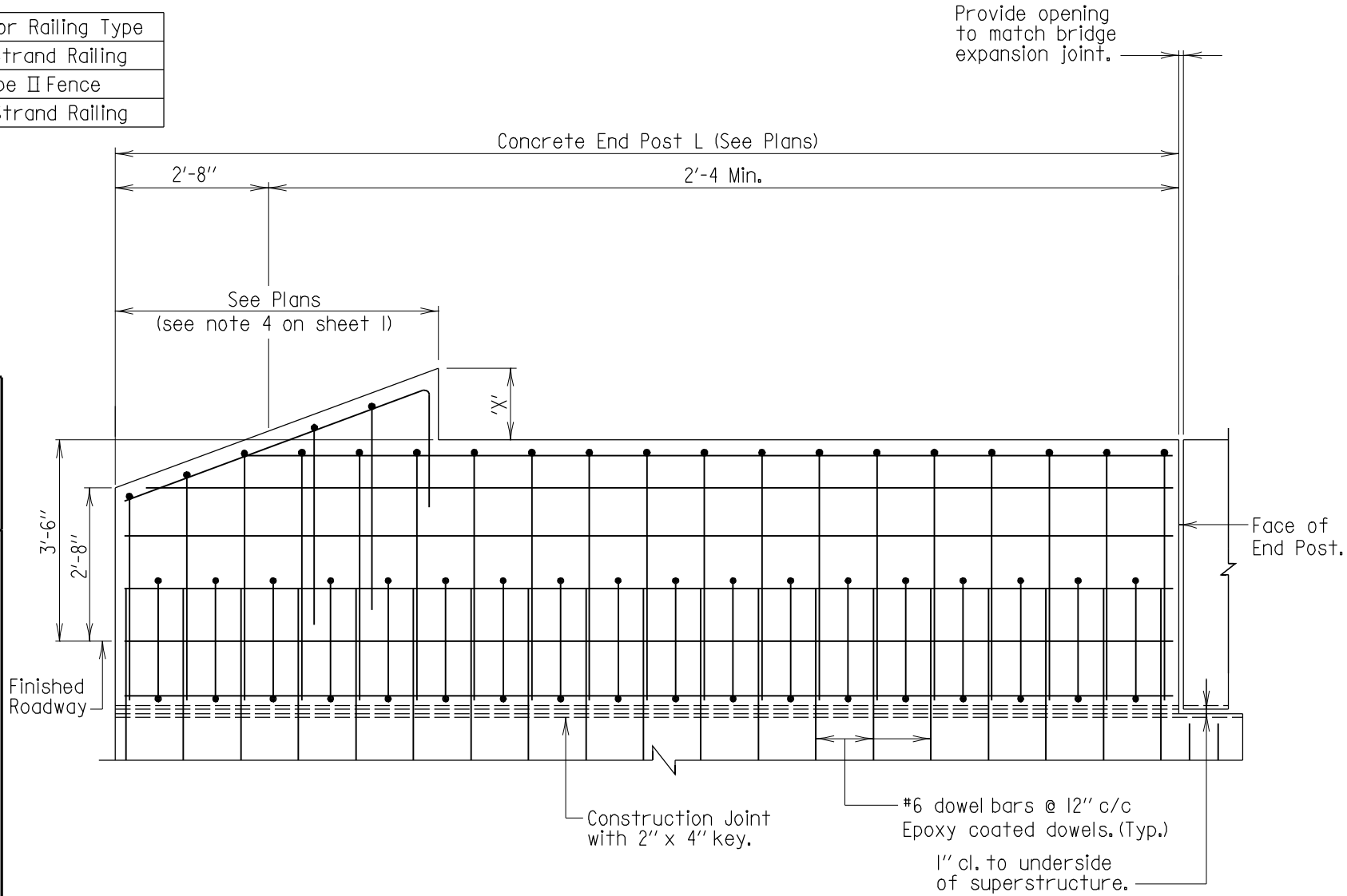

SECTION A-A

Scale: 3/8''=1'-0''

Notes:
1. For Parapet Reinforcing Details, see sheets 3 and 4.
2. Fencing or railing not shown.
3. If applicable, reinforcing for coping not shown.

Note to Designer:
This standard contains details for straight back, diamond back and recessed back parapets. Include the appropriate shape in the Contract Plans.

APPROVAL
DIRECTOR
OFFICE OF BRIDGE DEVEL.
DATE: 6/1/05

REVISIONS

SHA	11-14-05
FHWA	

FHWA APPROVAL
DATE:

STATE OF MARYLAND
DEPARTMENT OF TRANSPORTATION
STATE HIGHWAY ADMINISTRATION
OFFICE OF BRIDGE DEVELOPMENT

42'' F-SHAPE PARAPET END POST WITH FENCING
OR RAILING TRAIL END

STANDARD NO. BR-SB(6.55)-05-370

SHEET 2 **OF** 4

SUBSTRUCTURE ABUT.

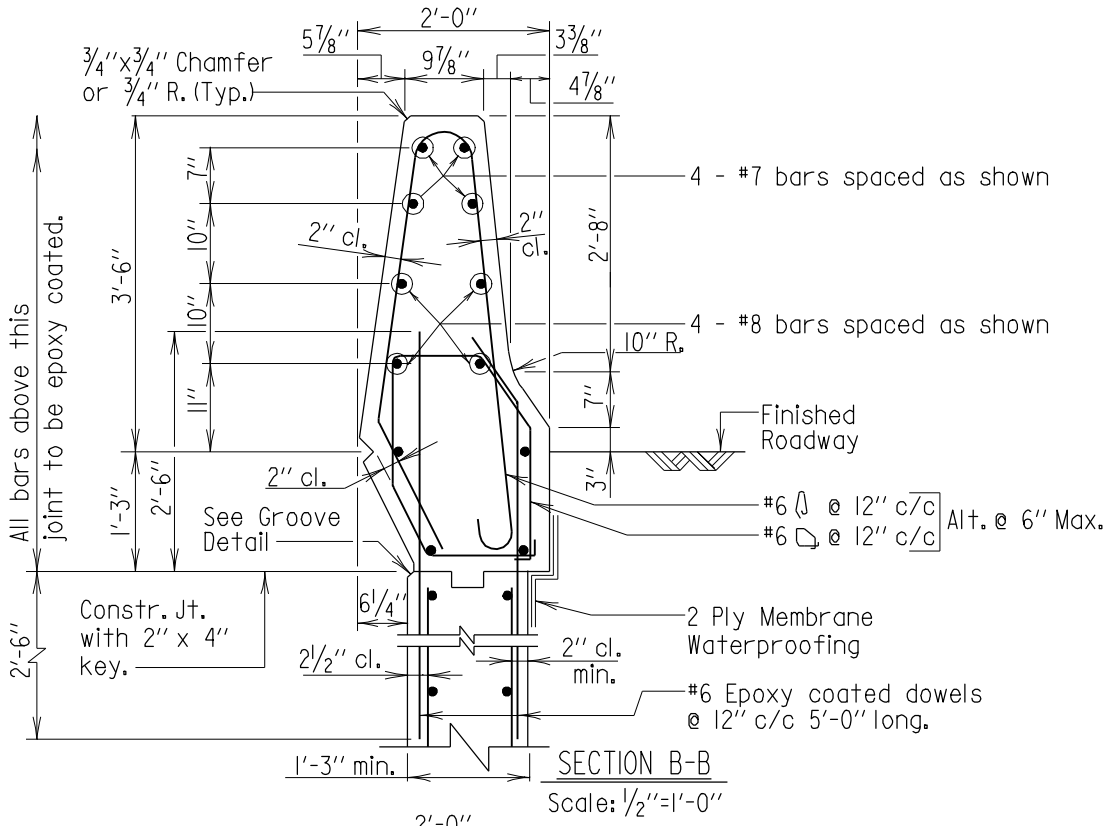

SECTION B-B

Scale: 1/2"=1'-0"

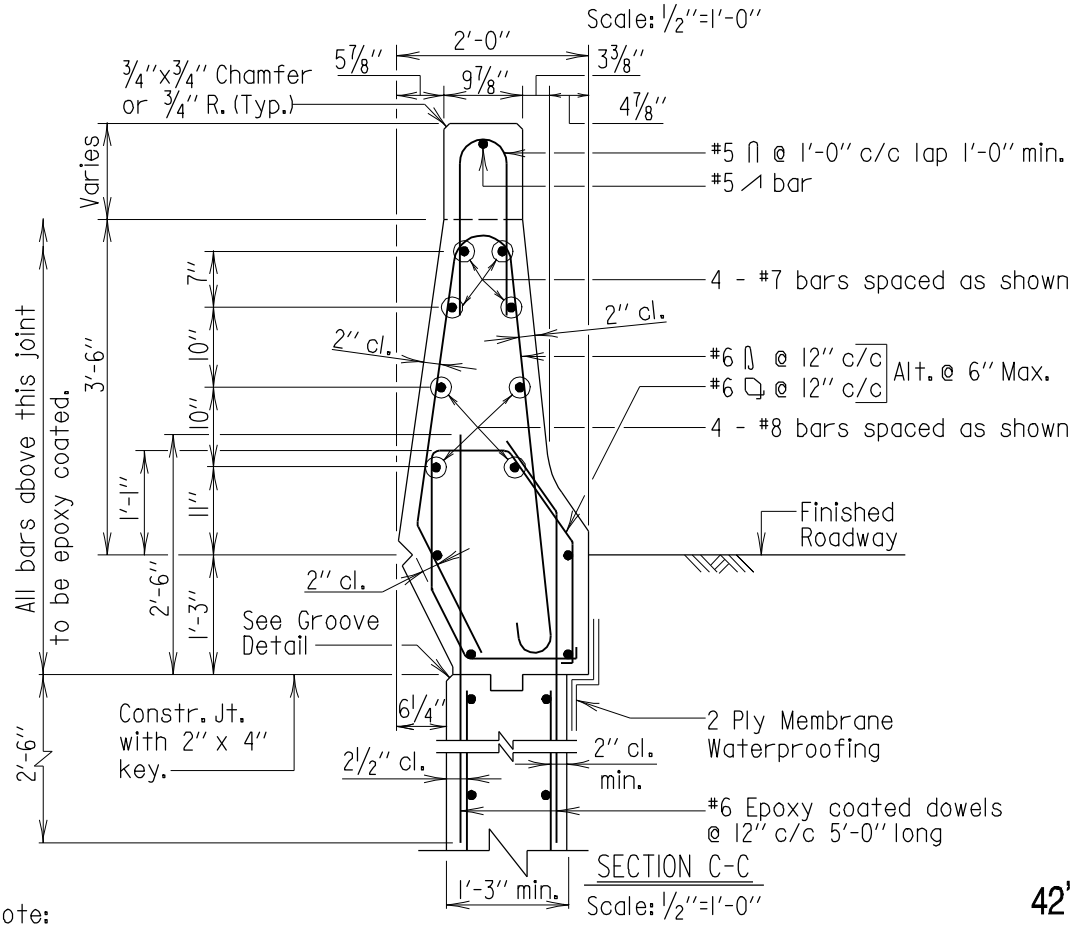

SECTION C-C

Scale: 1/2"=1'-0"

42" DIAMOND BACK

Note:
All longitudinal bars are #5 spaced as shown, unless noted otherwise.

APPROVAL	
R.S. Freedman DIRECTOR OFFICE OF BRIDGE DEVEL. DATE: 6/1/05	
REVISIONS	
SHA	FHWA
11-14-05	

FHWA APPROVAL
DATE:

STATE OF MARYLAND
DEPARTMENT OF TRANSPORTATION
STATE HIGHWAY ADMINISTRATION
OFFICE OF BRIDGE DEVELOPMENT

42" F-SHAPE PARAPET END POST WITH FENCING OR RAILING TRAIL END

STANDARD NO. BR-SB(6.55)-05-370

SHEET 3 OF 4

SUBSTRUCTURE ABUT.

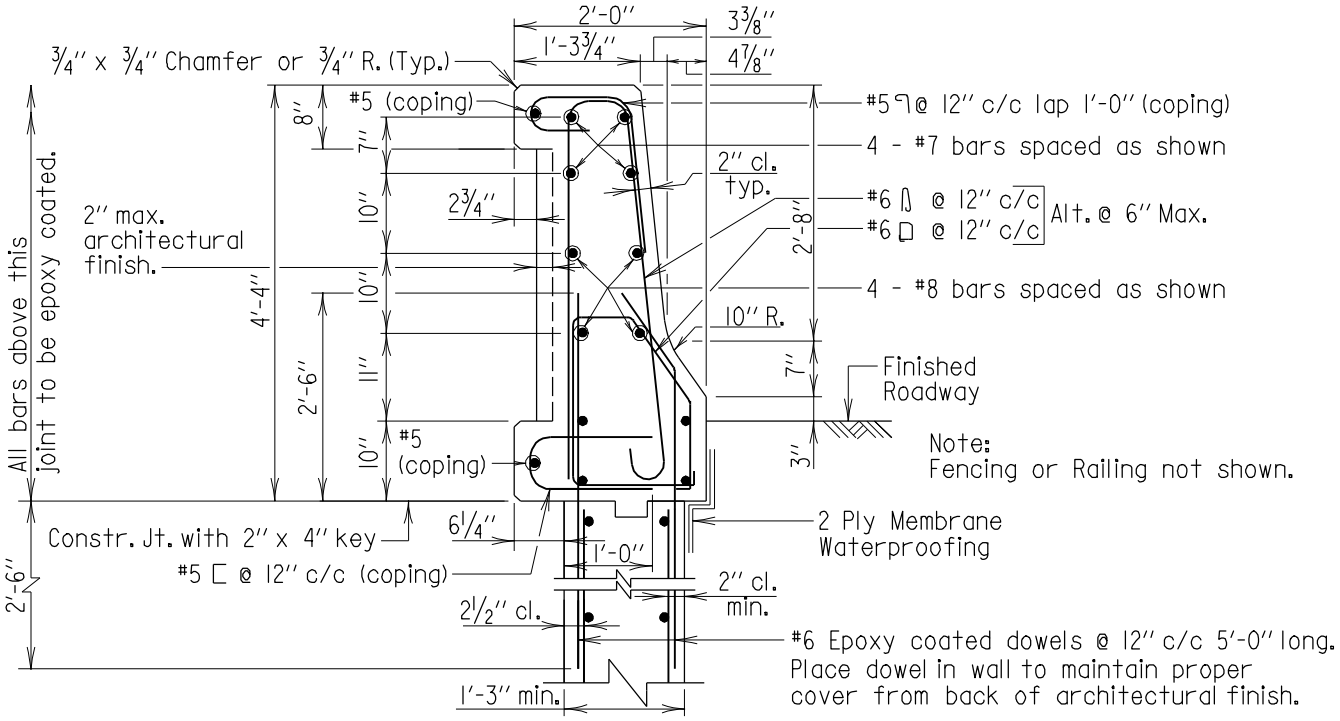

SECTION B-B

Scale: 1/2"=1'-0"

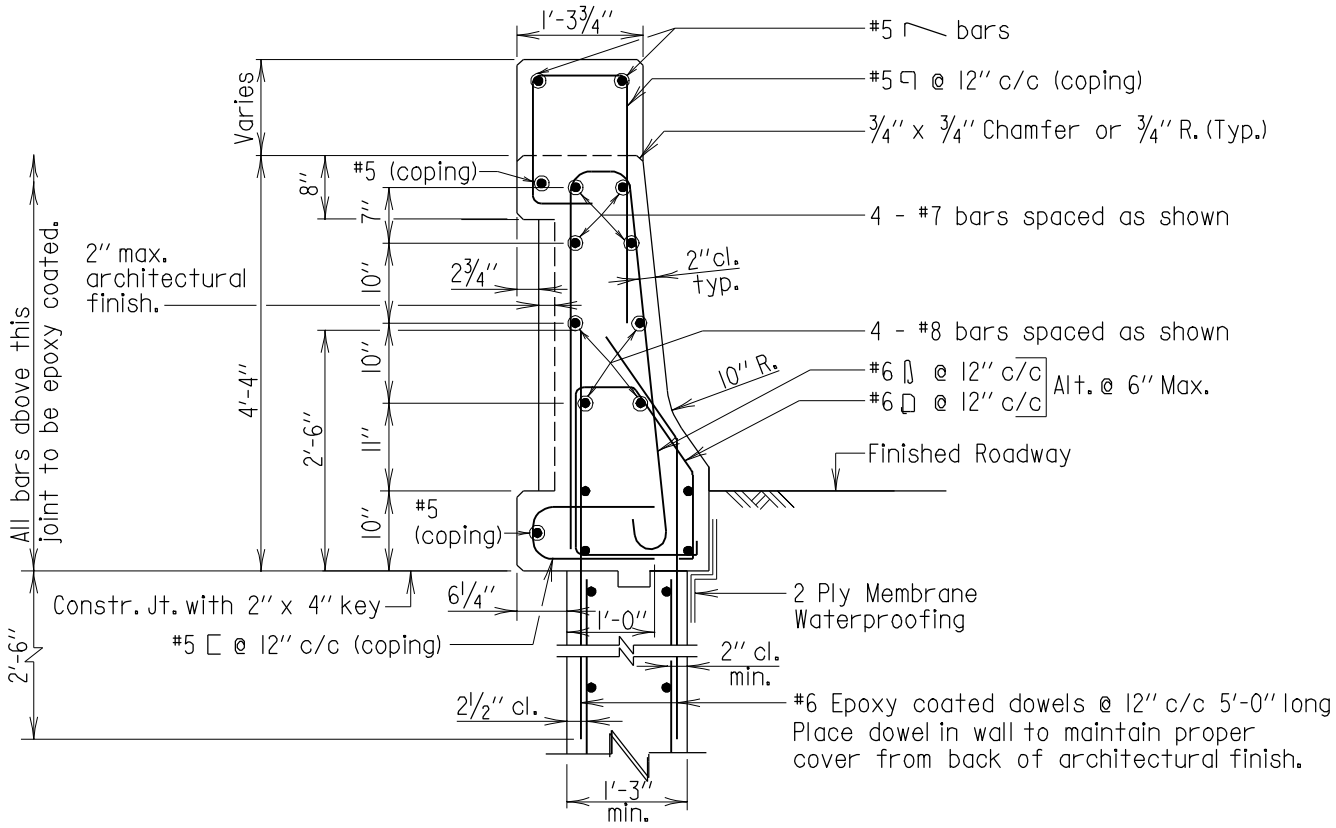

SECTION C-C

Scale: 1/2"=1'-0"

42" RECESSED BACK

Note:
All longitudinal bars are #5 spaced as shown, unless noted otherwise.

APPROVAL	
DIRECTOR OFFICE OF BRIDGE DEVEL.	
DATE: 6/1/05	
REVISIONS	
SHA	FHWA
11-14-05	
FHWA APPROVAL	
DATE:	

STATE OF MARYLAND
DEPARTMENT OF TRANSPORTATION
STATE HIGHWAY ADMINISTRATION
OFFICE OF BRIDGE DEVELOPMENT

42" F-SHAPE PARAPET END POST WITH FENCING OR RAILING TRAIL END

STANDARD NO. BR-SB(6.55)-05-370 SHEET 3 OF 4

SUBSTRUCTURE ABUT.

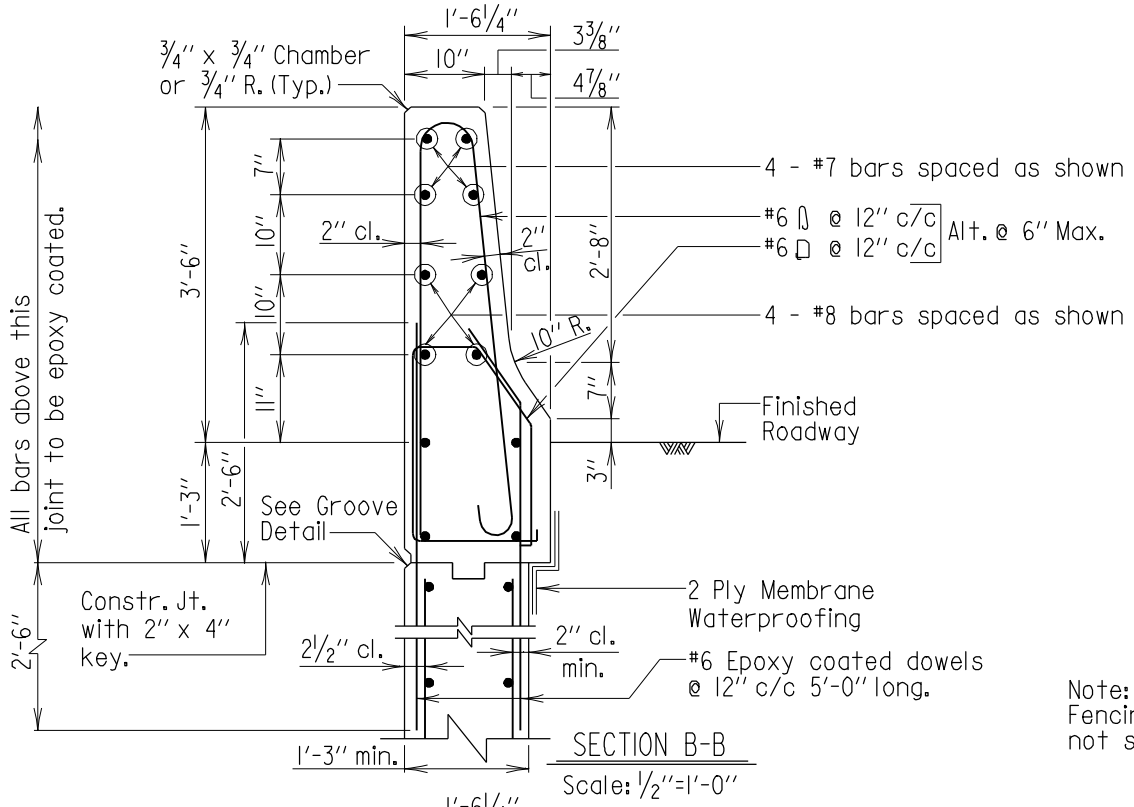

SECTION B-B

Scale: 1/2"=1'-0"

Note:
Fencing and Railing not shown.

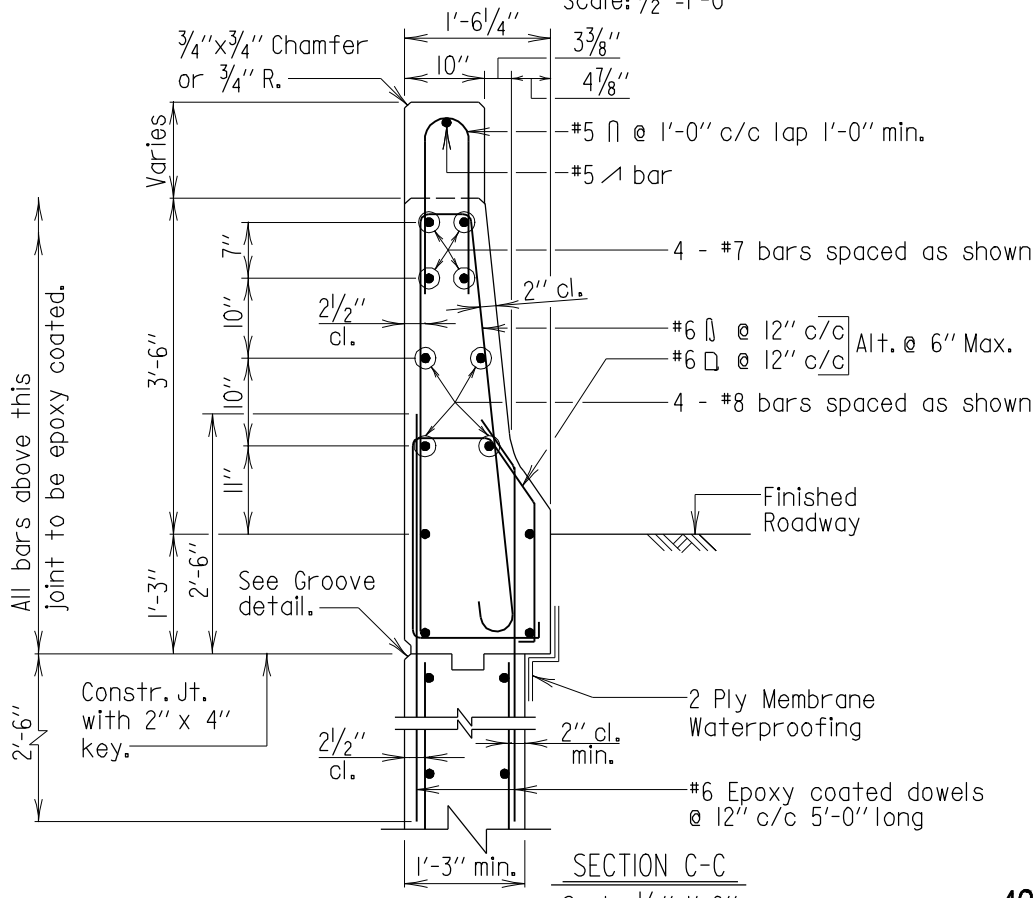

SECTION C-C

Scale: 1/2"=1'-0"

42'' STRAIGHT BACK

Note:
All longitudinal bars are #5 spaced as shown, unless noted otherwise.

APPROVAL
DIRECTOR OFFICE OF BRIDGE DEVEL.
DATE: 6/1/05

REVISIONS	
SHA	FHWA
11-14-05	

FHWA APPROVAL
DATE:

STATE OF MARYLAND
DEPARTMENT OF TRANSPORTATION
STATE HIGHWAY ADMINISTRATION
OFFICE OF BRIDGE DEVELOPMENT

42'' F-SHAPE PARAPET END POST WITH FENCING OR RAILING TRAIL END

STANDARD NO. BR-SB(6.55)-05-370 SHEET 3 OF 4

SUBSTRUCTURE ABUT.

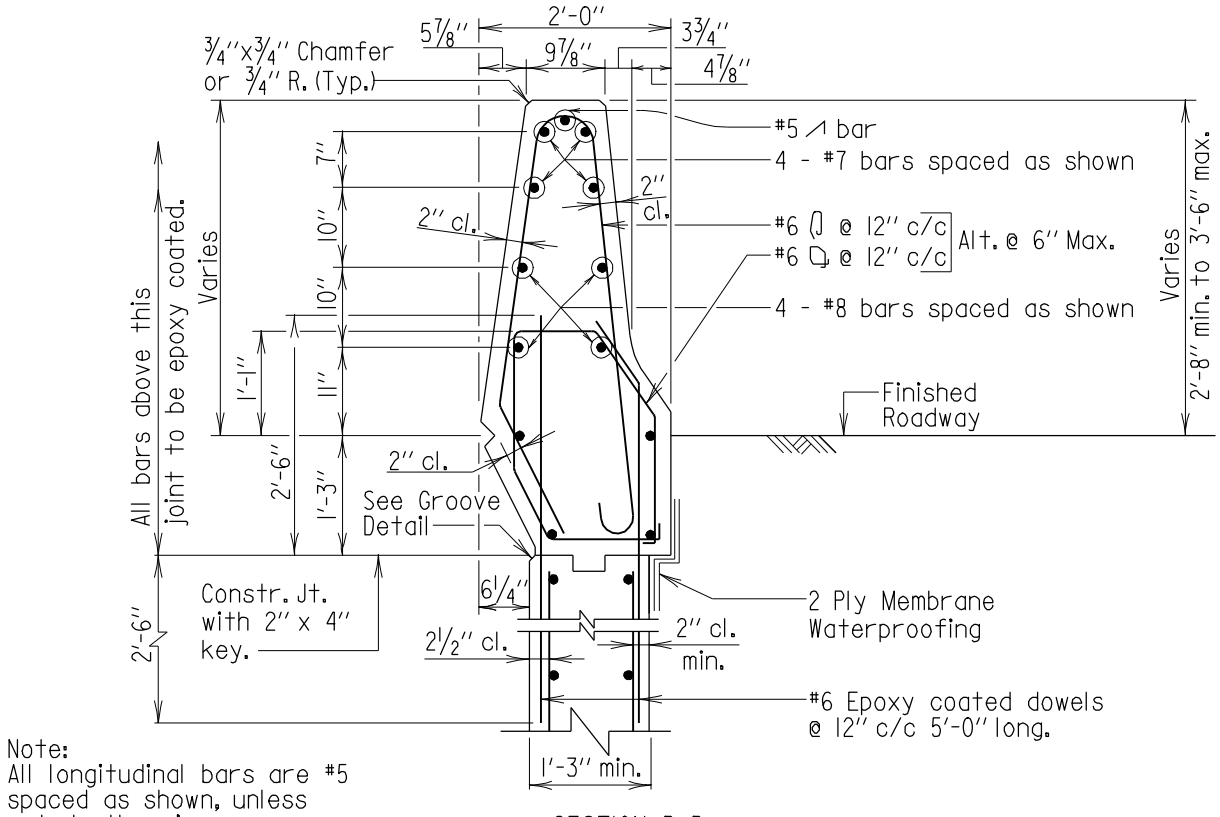

Note:
All longitudinal bars are #5 spaced as shown, unless noted otherwise.

SECTION D-D
Scale: 1/2"=1'-0"

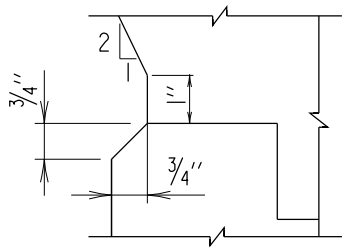

GROOVE DETAIL
Scale: 3"=1'-0"

42" DIAMOND BACK

APPROVAL	
R.S. Freedman DIRECTOR OFFICE OF BRIDGE DEVEL. DATE: 6/1/05	
REVISIONS	
SHA	FHWA
11-14-05	

FHWA APPROVAL
DATE:

STATE OF MARYLAND
DEPARTMENT OF TRANSPORTATION
STATE HIGHWAY ADMINISTRATION
OFFICE OF BRIDGE DEVELOPMENT

42" F-SHAPE PARAPET END POST WITH FENCING OR RAILING TRAIL END

STANDARD NO. BR-SB(6.55)-05-370 SHEET 4 OF 4

SUBSTRUCTURE ABUT.

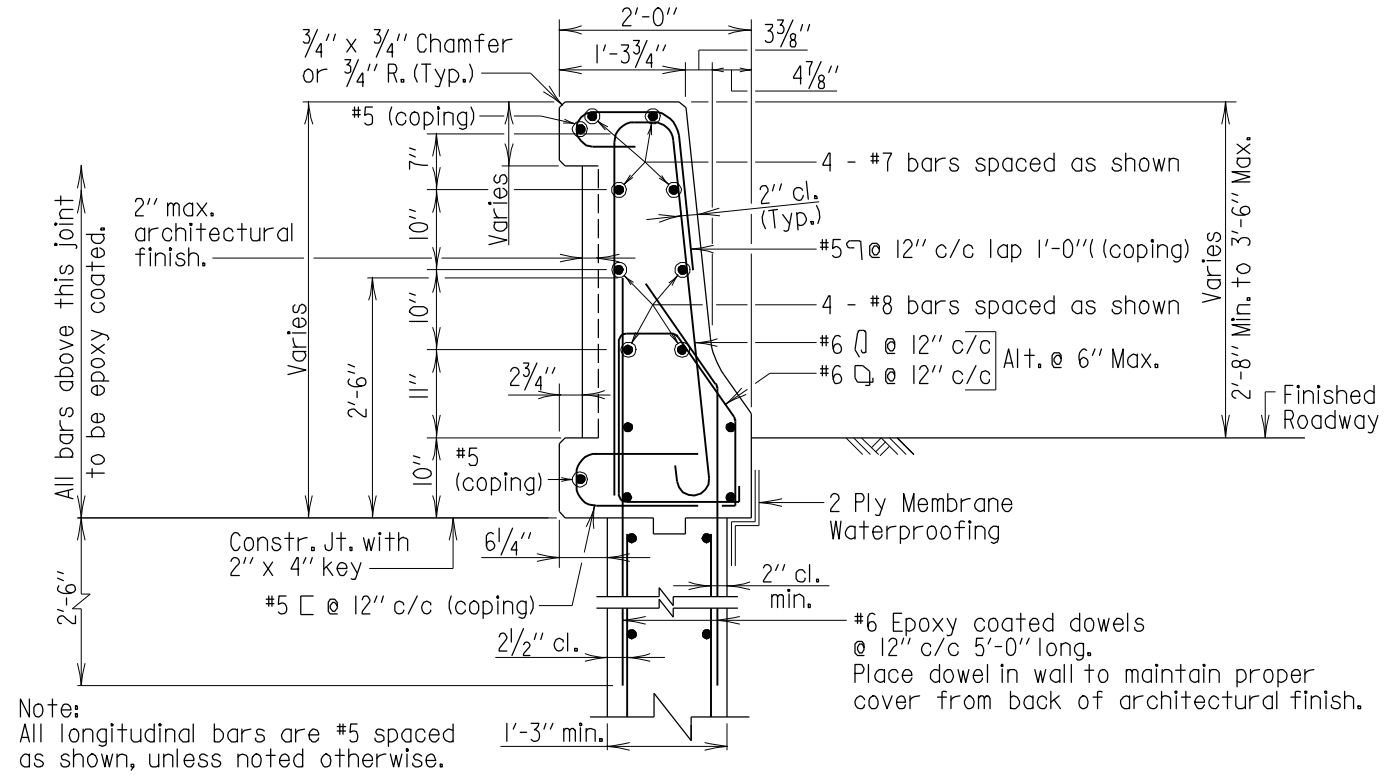

Note:
All longitudinal bars are #5 spaced as shown, unless noted otherwise.

SECTION D-D
Scale: 1/2" = 1'-0"

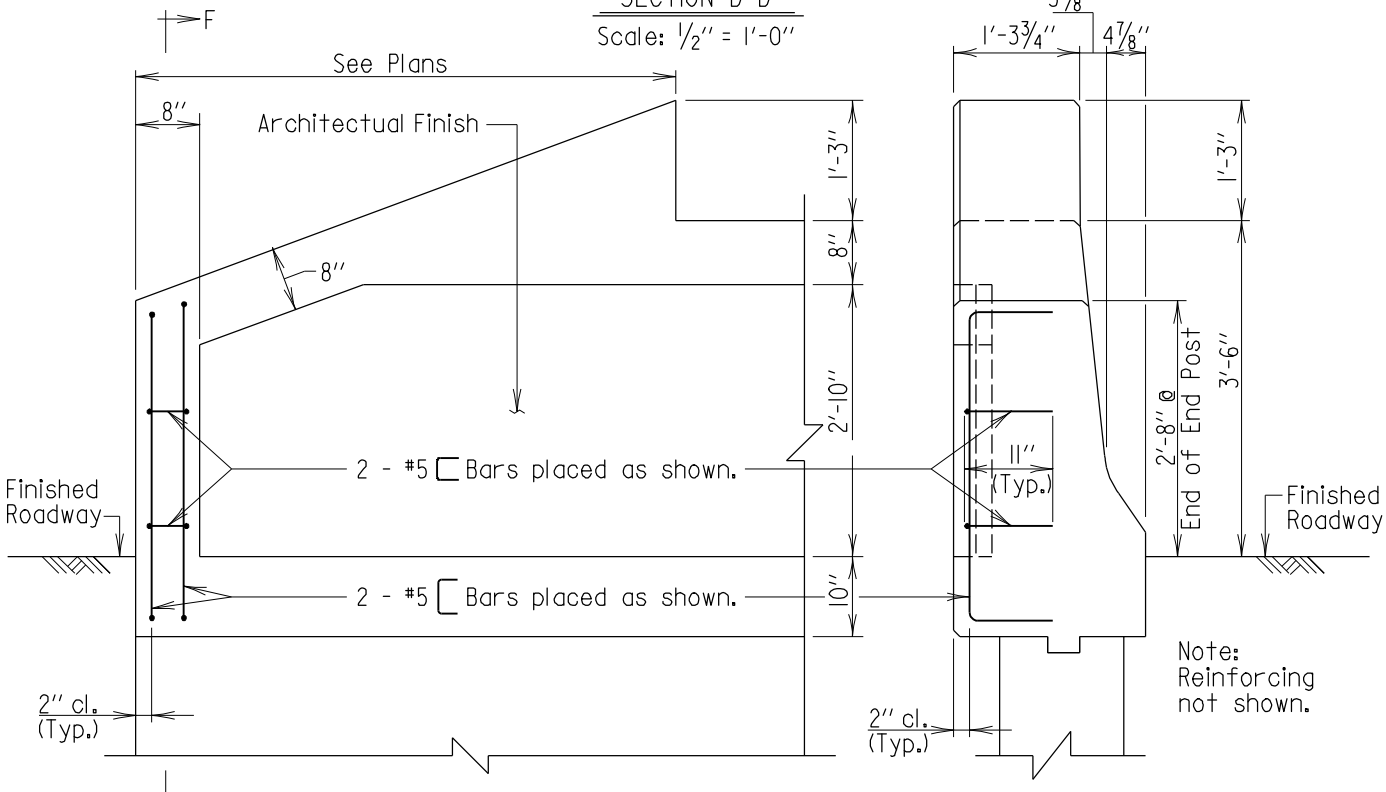

PARTIAL REAR ELEVATION
Scale: 1/2"=1'-0"

SECTION F-F
Scale: 1/2"=1'-0"

42" RECESSED BACK

Notes
1. Taper of coping to begin at concrete lug.
2. There is no View E-E for the 42" Recessed Back End Post.

APPROVAL	
DIRECTOR OFFICE OF BRIDGE DEVEL. DATE: 6/1/05	
REVISIONS	
SHA	FHWA
11-14-05	

FHWA APPROVAL
DATE:

STATE OF MARYLAND
DEPARTMENT OF TRANSPORTATION
STATE HIGHWAY ADMINISTRATION
OFFICE OF BRIDGE DEVELOPMENT

42" F-SHAPE PARAPET END POST WITH FENCING OR RAILING TRAIL END

STANDARD NO. BR-SB(6.55)-05-370 SHEET 4 OF 4

SUBSTRUCTURE ABUT.

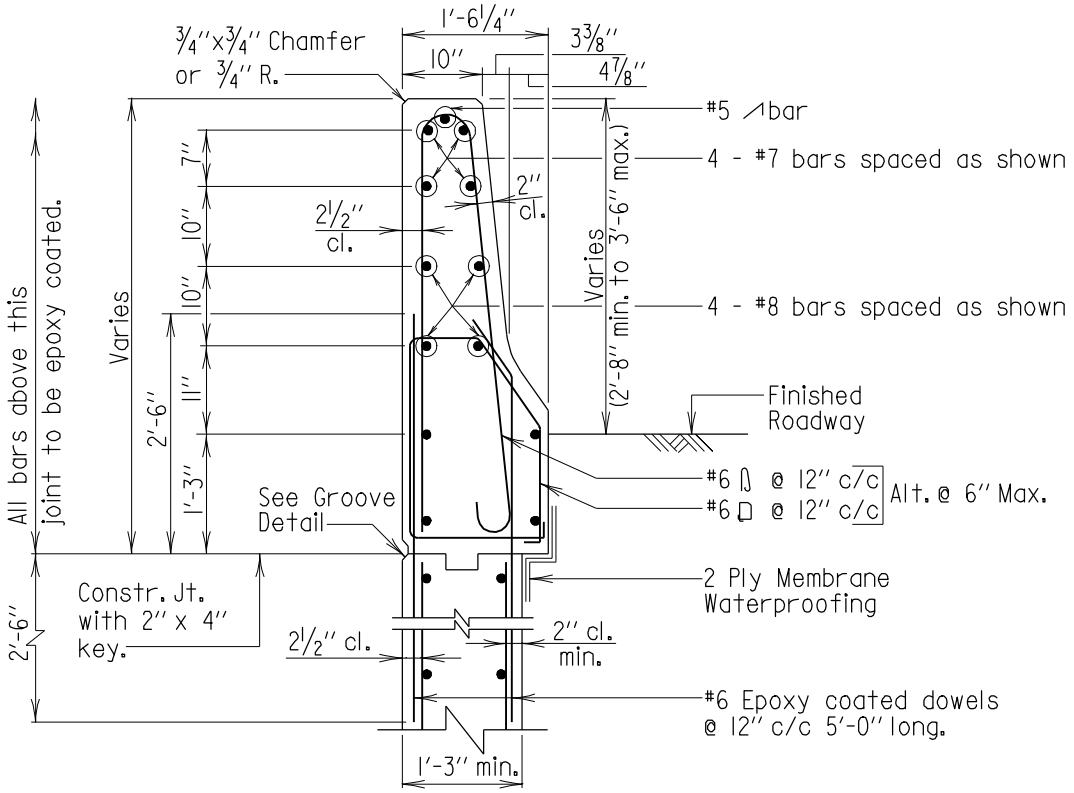

SECTION D-D

Scale: 1/2"=1'-0"

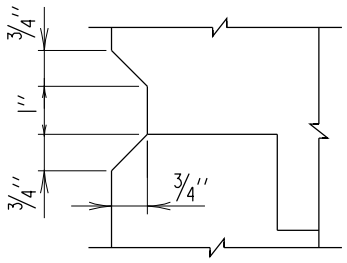

GROOVE DETAIL

Scale: 3"=1'-0"

Note:
All longitudinal bars are #5 spaced as shown, unless noted otherwise.

42'' STRAIGHT BACK

APPROVAL	
DIRECTOR OFFICE OF BRIDGE DEVEL.	
DATE: 6/1/05	
REVISIONS	
SHA	FHWA
11-14-05	

FHWA APPROVAL
DATE:

STATE OF MARYLAND
DEPARTMENT OF TRANSPORTATION
STATE HIGHWAY ADMINISTRATION
OFFICE OF BRIDGE DEVELOPMENT

42'' F-SHAPE PARAPET END POST WITH FENCING OR RAILING TRAIL END

STANDARD NO. BR-SB(6.55)-05-370 SHEET 4 OF 4

SUBSTRUCTURE ABUT.

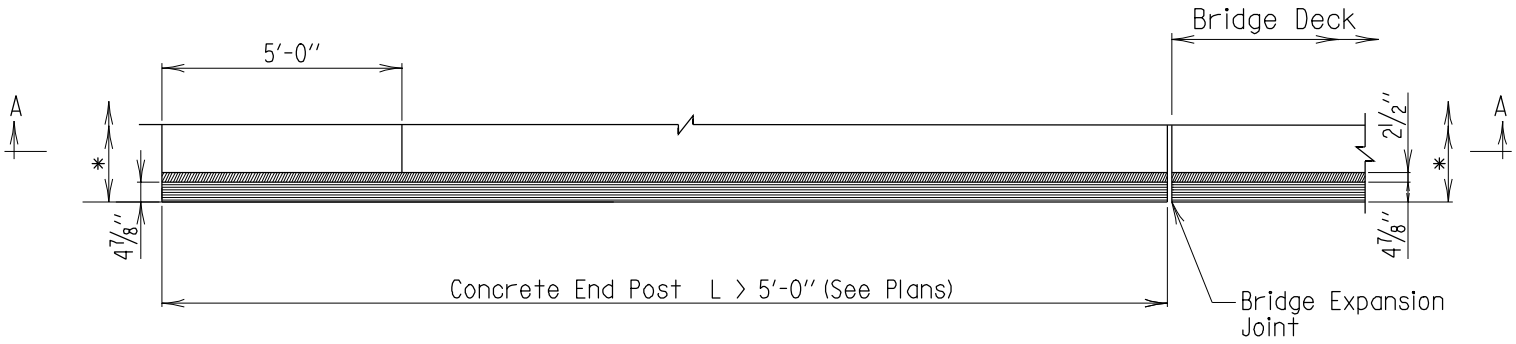

* For overall Parapet dimensions, see sheets 3 and 4 of 4.

PLAN

Scale: 1/4"=1'-0"

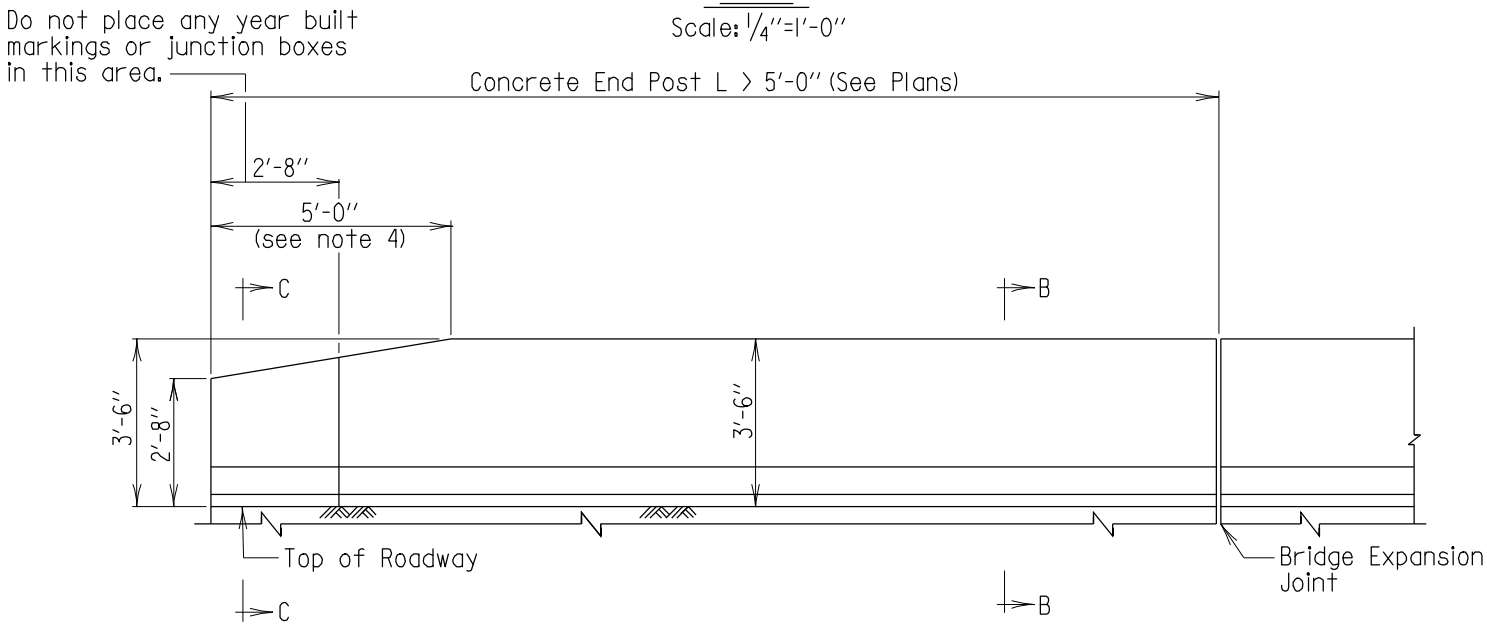

ELEVATION

Scale: 1/4"=1'-0"

Notes:
1. Use on the trail end of one way bridges.
2. W-Beam Traffic Barrier not shown.
3. For fence or Railing layout and details, see Plans.
4. Taper barrier height to 2'-8" when Thrie Beam is required. Taper to 3'-6" when adjacent to concrete F-Shape Barrier.

Note to Designer:
This standard contains details for straight back, diamond back and recessed back parapets. Include the appropriate shape in the Contract Plans.

APPROVAL
DIRECTOR
OFFICE OF BRIDGE DEVEL.
DATE: 6/1/05

REVISIONS

SHA	8-30-05
FHWA	

STATE OF MARYLAND
DEPARTMENT OF TRANSPORTATION
STATE HIGHWAY ADMINISTRATION
OFFICE OF BRIDGE DEVELOPMENT

42" F-SHAPE PARAPET END POST WITHOUT FENCING OR RAILING TRAIL END

STANDARD NO. BR-SB(6.56)-05-371

SHEET 1 **OF** 4

FHWA APPROVAL
DATE:

SUBSTRUCTURE ABUT.

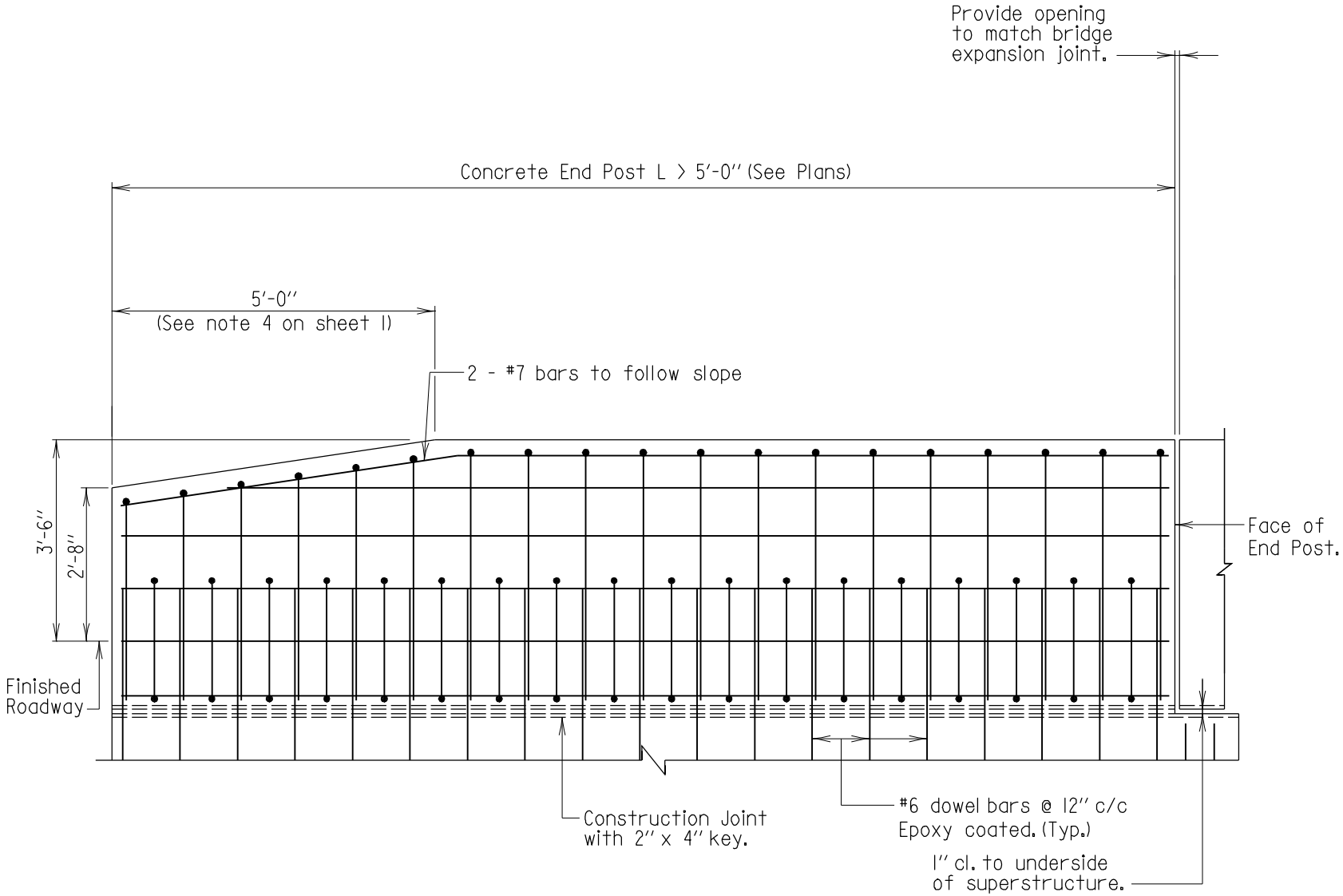

SECTION A-A

Scale: 3/8"=1'-0"

Notes:
1. For Parapet Reinforcing Details, see sheets 3 and 4.
2. Fencing or railing not shown.
3. If applicable, reinforcing for coping not shown.

Note to Designer:
This standard contains details for straight back, diamond back and recessed back parapets. Include the appropriate shape in the Contract Plans.

APPROVAL	
OFFICE OF BRIDGE DEVEL. DIRECTOR	
DATE: 6/1/05	
REVISIONS	
SHA	FHWA
11-14-05	

FHWA APPROVAL
DATE:

STATE OF MARYLAND
DEPARTMENT OF TRANSPORTATION
STATE HIGHWAY ADMINISTRATION
OFFICE OF BRIDGE DEVELOPMENT

42" F-SHAPE PARAPET END POST WITHOUT FENCING OR RAILING TRAIL END

STANDARD NO. BR-SB(6.56)-05-371

SHEET 2 OF 4

SUBSTRUCTURE ABUT.

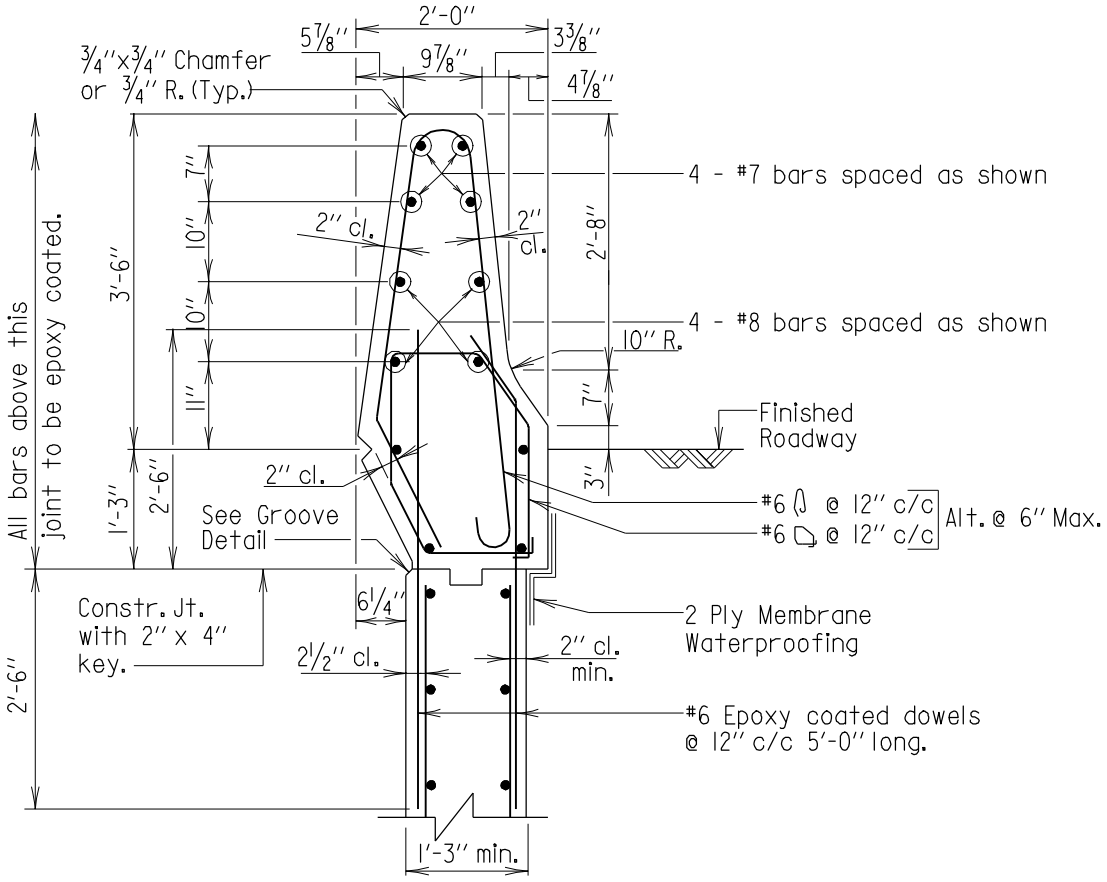

SECTION B-B

Scale: 1/2"=1'-0"

Note:
All longitudinal bars are #5 spaced as shown, unless noted otherwise.

42" DIAMOND BACK

APPROVAL	
R S Freedman DIRECTOR OFFICE OF BRIDGE DEVEL. DATE: 6/1/05	
REVISIONS	
SHA	FHWA
11-14-05	·
·	·
·	·
·	·

FHWA APPROVAL
DATE: .

STATE OF MARYLAND
DEPARTMENT OF TRANSPORTATION
STATE HIGHWAY ADMINISTRATION
OFFICE OF BRIDGE DEVELOPMENT

42" F-SHAPE PARAPET END POST WITHOUT FENCING OR RAILING TRAIL END

STANDARD NO. BR-SB(6.56)-05-371

SHEET 3 OF 4

SUBSTRUCTURE ABUT.

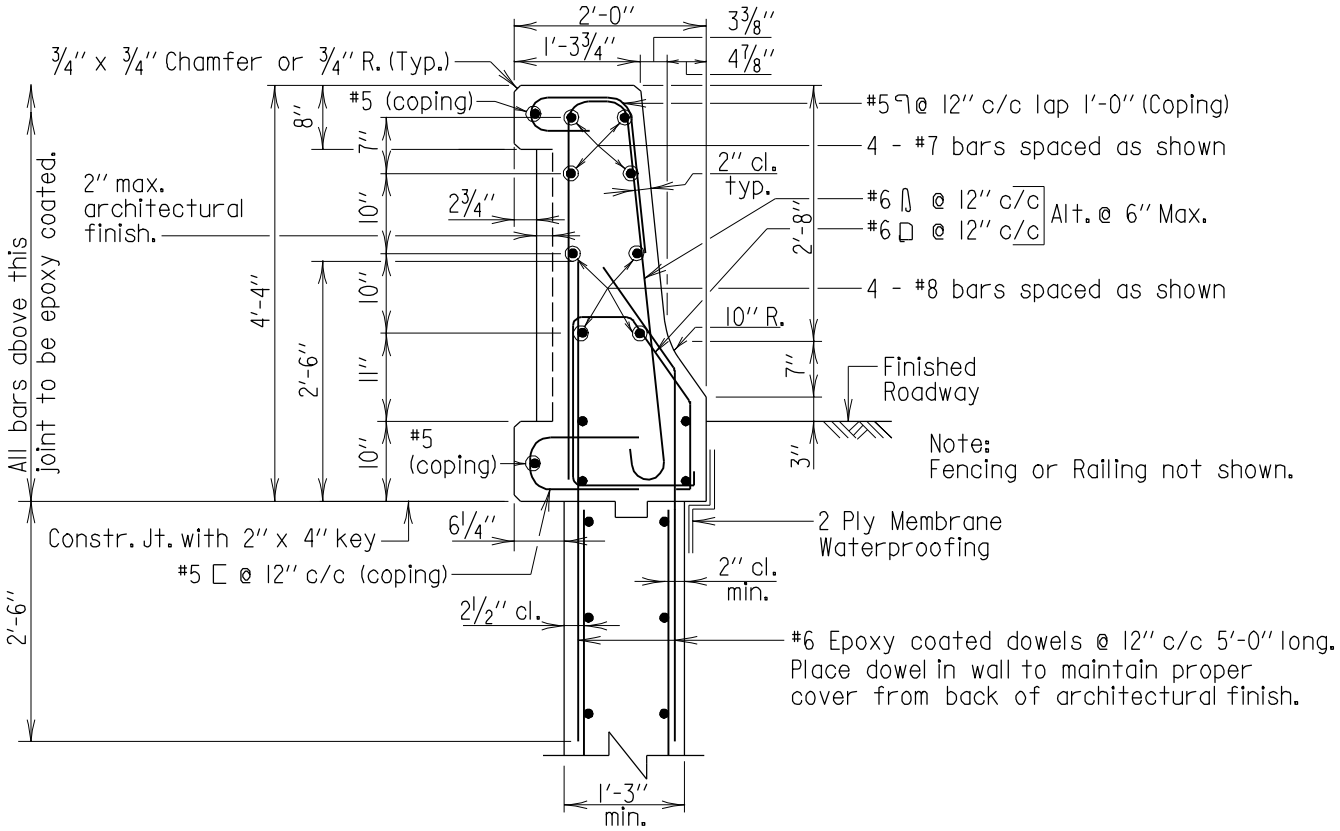

SECTION B-B

Scale: 1/2"=1'-0"

42" RECESSED BACK

Note:
All longitudinal bars are #5 spaced as shown, unless noted otherwise.

APPROVAL	
R S Freedman DIRECTOR OFFICE OF BRIDGE DEVEL. DATE: 6/1/05	
REVISIONS	
SHA	FHWA
11-14-05	·
12-12-08	·
·	·
·	·

FHWA APPROVAL
DATE:

STATE OF MARYLAND
DEPARTMENT OF TRANSPORTATION
STATE HIGHWAY ADMINISTRATION
OFFICE OF BRIDGE DEVELOPMENT

42" F-SHAPE PARAPET END POST WITHOUT FENCING OR RAILING TRAIL END

STANDARD NO. BR-SB(6.56)-05-371

SHEET 3 OF 4

SUBSTRUCTURE ABUT.

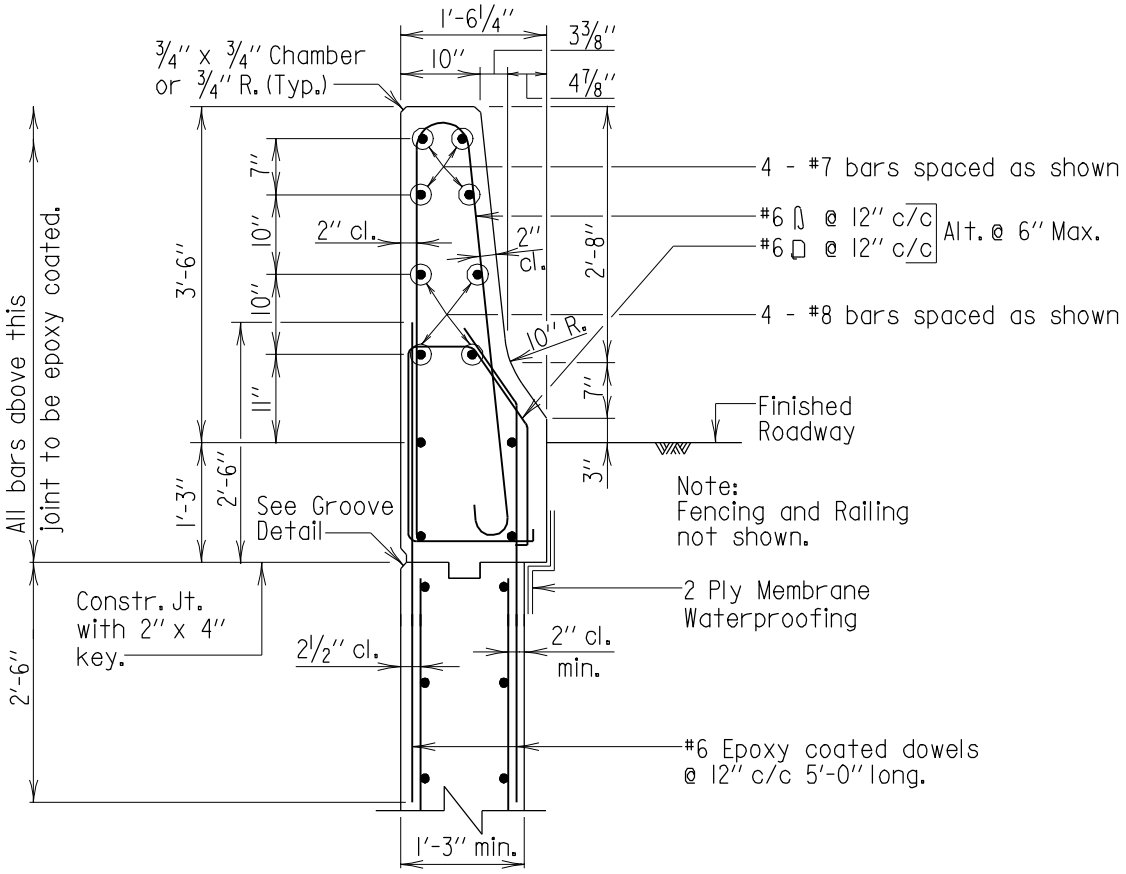

SECTION B-B

Scale: 1/2"=1'-0"

Note:
All longitudinal bars are #5 spaced as shown, unless noted otherwise.

42'' STRAIGHT BACK

APPROVAL	
R.S. Freedman DIRECTOR OFFICE OF BRIDGE DEVEL. DATE: 6/1/05	
REVISIONS	
SHA	FHWA
11-14-05	·
·	·
·	·
·	·

FHWA APPROVAL
DATE:

STATE OF MARYLAND
DEPARTMENT OF TRANSPORTATION
STATE HIGHWAY ADMINISTRATION
OFFICE OF BRIDGE DEVELOPMENT

42'' F-SHAPE PARAPET END POST WITHOUT FENCING OR RAILING TRAIL END

STANDARD NO. BR-SB(6.56)-05-371

SHEET 3 OF 4

SUBSTRUCTURE ABUT.

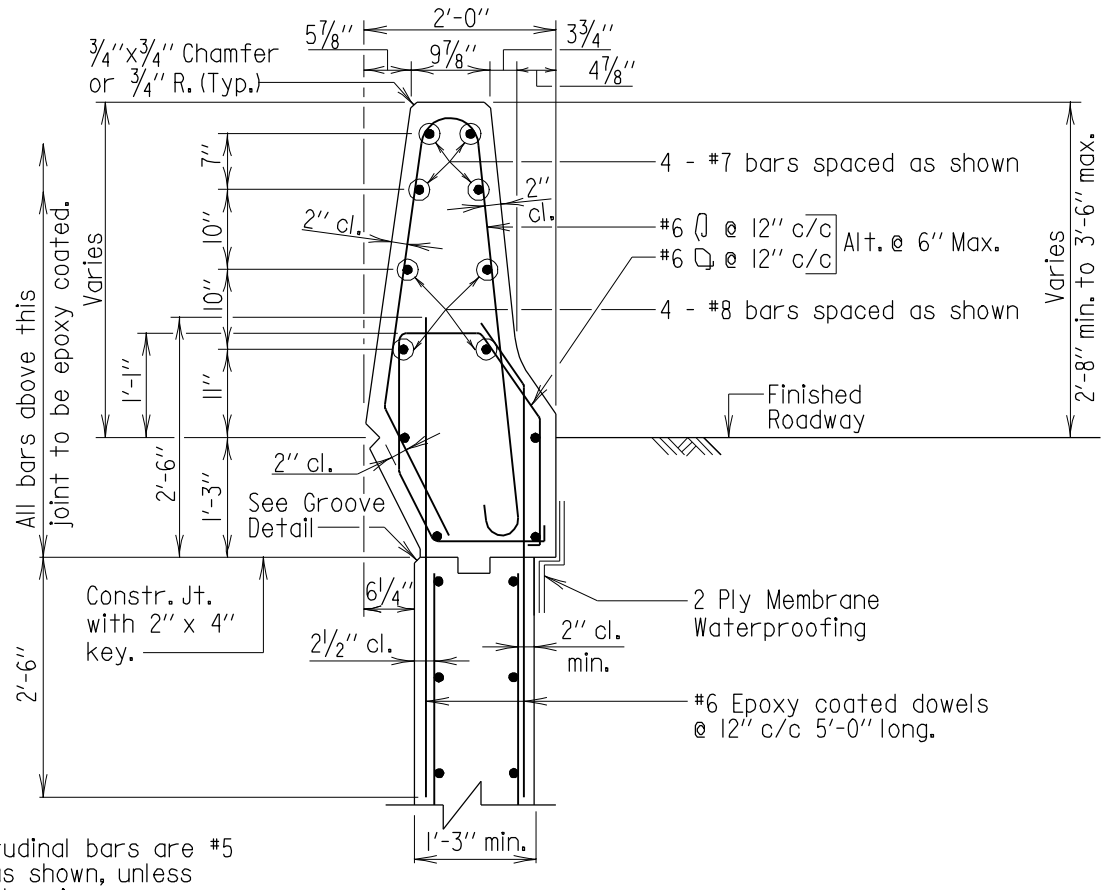

Note:
All longitudinal bars are #5 spaced as shown, unless noted otherwise.

SECTION C-C
Scale: 1/2"=1'-0"

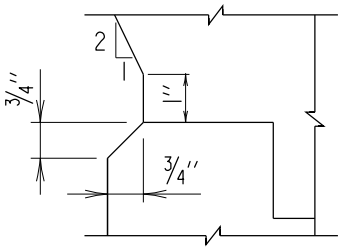

GROOVE DETAIL
Scale: 3"=1'-0"

42" DIAMOND BACK

APPROVAL	
DIRECTOR OFFICE OF BRIDGE DEVEL. DATE: 6/1/05	
REVISIONS	
SHA	FHWA
11-14-05	

STATE OF MARYLAND
DEPARTMENT OF TRANSPORTATION
STATE HIGHWAY ADMINISTRATION
OFFICE OF BRIDGE DEVELOPMENT

42" F-SHAPE PARAPET END POST WITHOUT FENCING OR RAILING TRAIL END

FHWA APPROVAL
DATE:

STANDARD NO. BR-SB(6.56)-05-371

SHEET 4 OF 4

SUBSTRUCTURE ABUT.

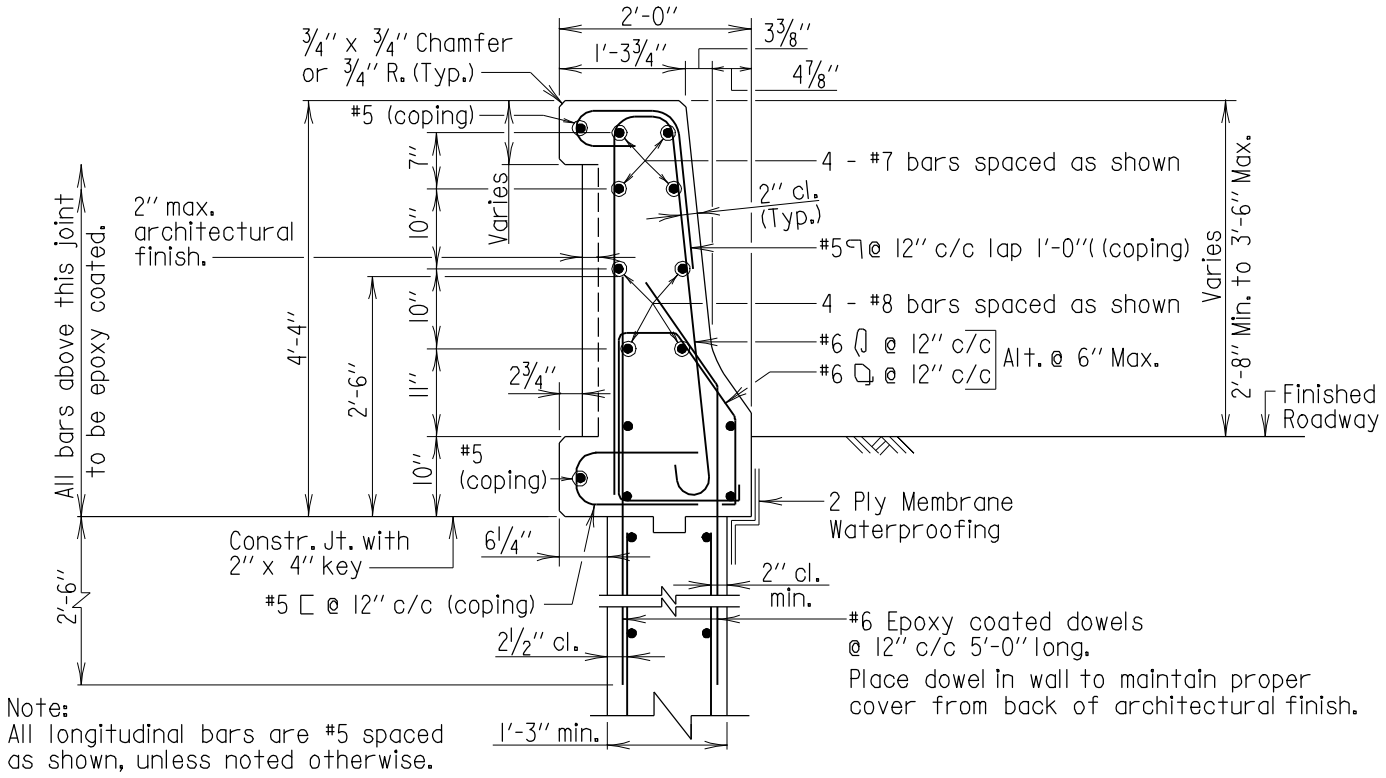

Note:
All longitudinal bars are #5 spaced as shown, unless noted otherwise.

SECTION C-C
Scale: 1/2" = 1'-0"

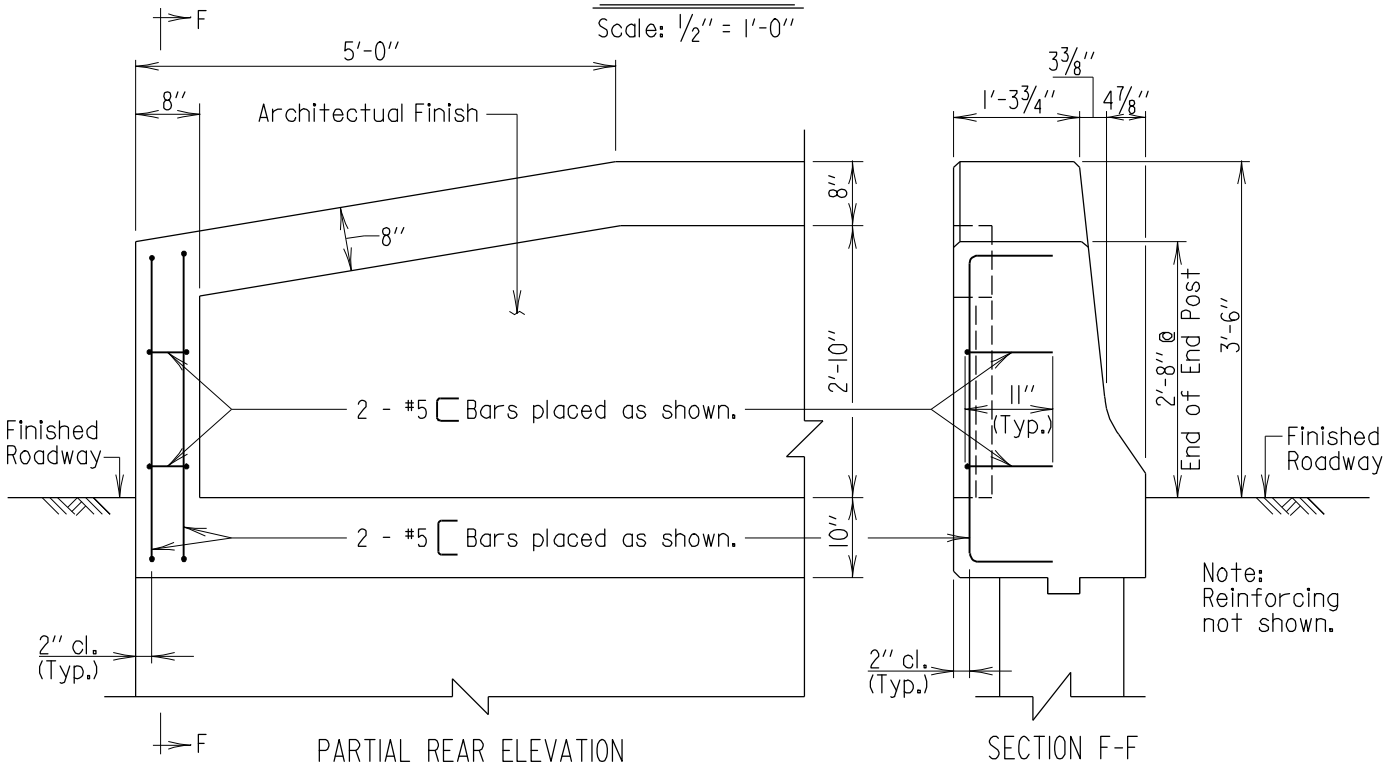

PARTIAL REAR ELEVATION
Scale: 1/2"=1'-0"

SECTION F-F
Scale: 1/2"=1'-0"

42" RECESSED BACK

Notes:
1. Taper of coping to begin at concrete lug.
2. There is no View E-E for the 42" Recessed Back End Post.

APPROVAL	
R S Freedman DIRECTOR OFFICE OF BRIDGE DEVEL. DATE: 6/1/05	
REVISIONS	
SHA	FHWA
8-30-05	·
11-14-05	·
·	·
·	·

FHWA APPROVAL
DATE:

STATE OF MARYLAND
DEPARTMENT OF TRANSPORTATION
STATE HIGHWAY ADMINISTRATION
OFFICE OF BRIDGE DEVELOPMENT

42" F-SHAPE PARAPET END POST WITHOUT FENCING OR RAILING TRAIL END

STANDARD NO. BR-SB(6.56)-05-371 SHEET 4 OF 4

SUBSTRUCTURE ABUT.

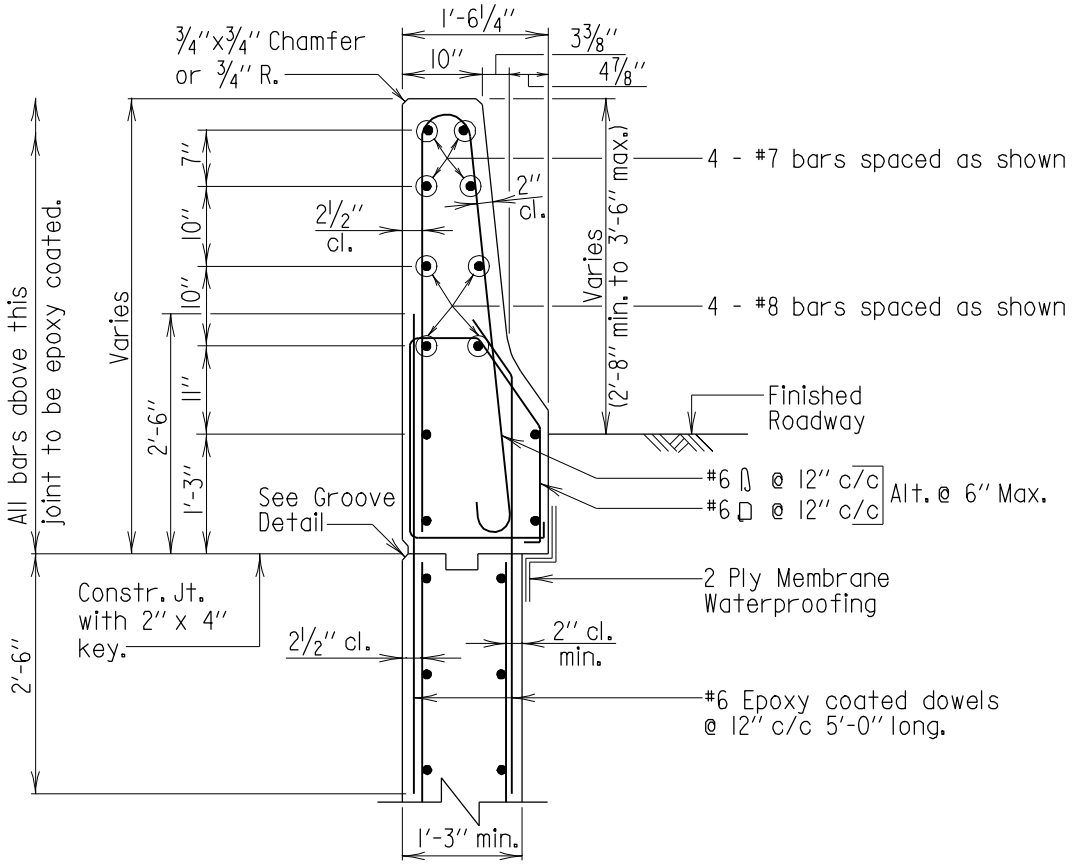

SECTION C-C

Scale: 1/2"=1'-0"

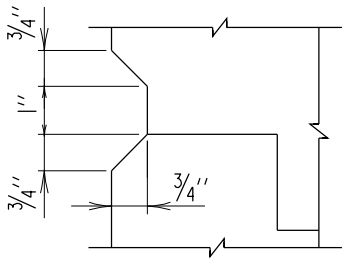

GROOVE DETAIL

Scale: 3"=1'-0"

Note:
All longitudinal bars are #5 spaced as shown, unless noted otherwise.

42" STRAIGHT BACK

APPROVAL	
DIRECTOR OFFICE OF BRIDGE DEVEL.	
DATE: 6/1/05	
REVISIONS	
SHA	FHWA
11-14-05	

FHWA APPROVAL
DATE:

STATE OF MARYLAND
DEPARTMENT OF TRANSPORTATION
STATE HIGHWAY ADMINISTRATION
OFFICE OF BRIDGE DEVELOPMENT

42" F-SHAPE PARAPET END POST WITHOUT FENCING OR RAILING TRAIL END

STANDARD NO. BR-SB(6.56)-05-371

SHEET 4 OF 4

SUBSTRUCTURE ABUT.

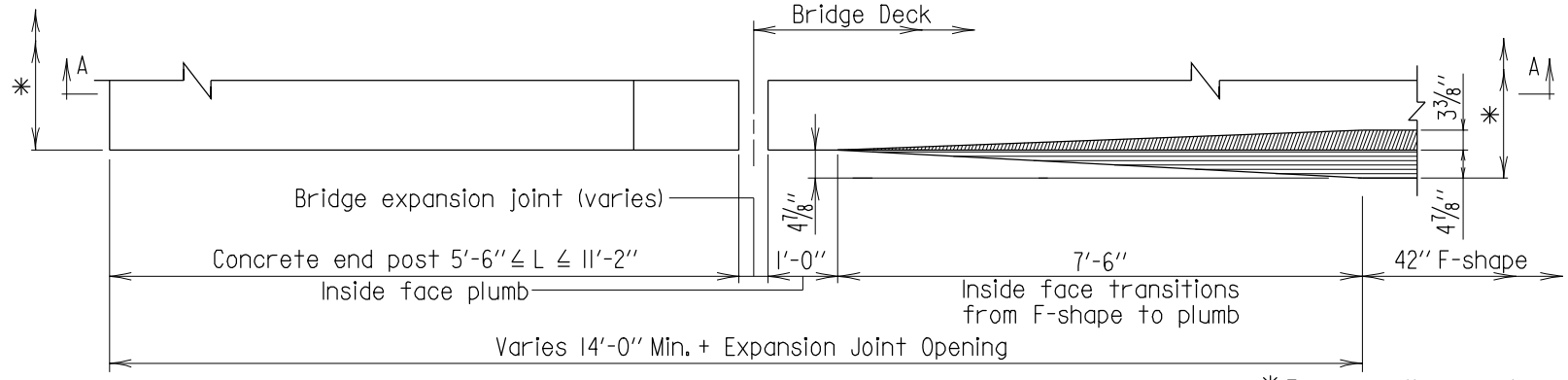

PLAN

Scale: 3/8'' = 1'-0''

* For overall parapet dimension see sheets 3 and 4.

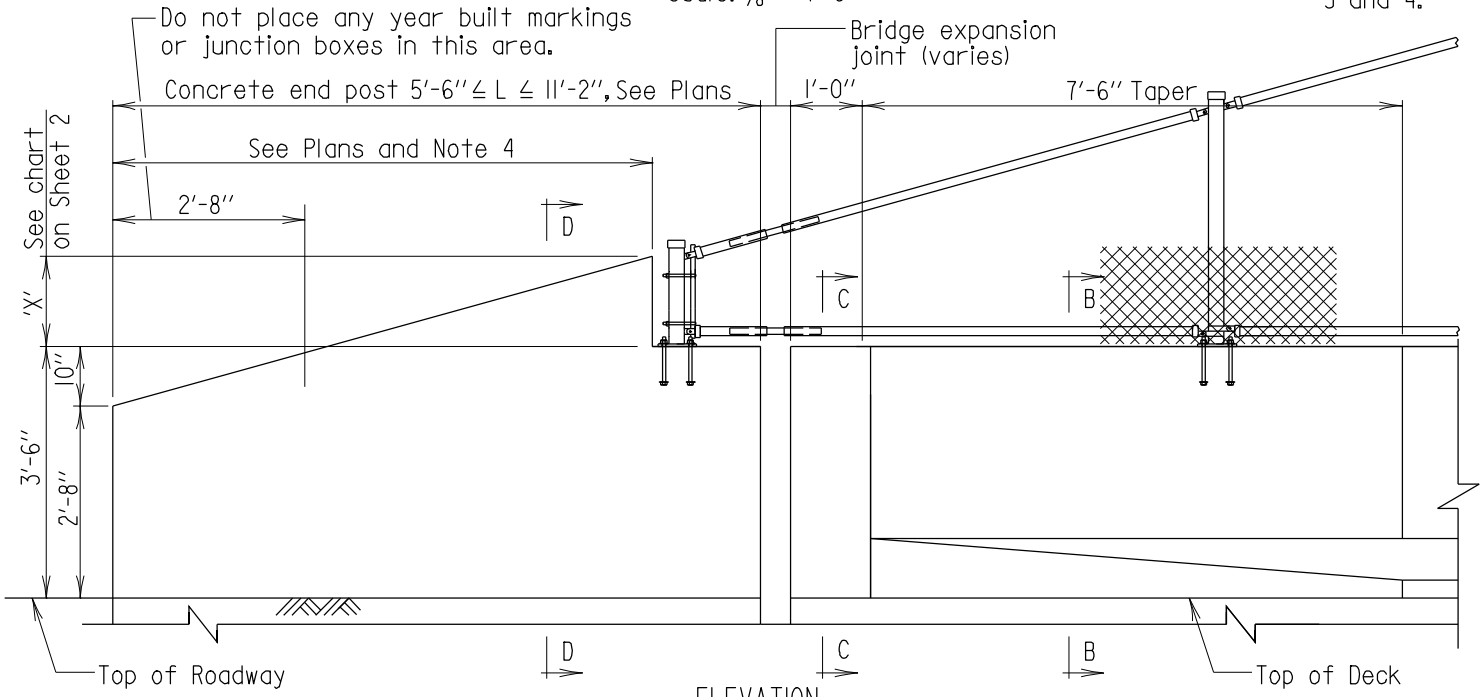

ELEVATION

Scale: 3/8'' = 1'-0''

Notes:

1. Use on the approach end of bridge when end post length is less than 11'-2''.
2. Thrie Beam Traffic Barrier not shown.
3. Type II fence shown, see Plans for fence or railing layout and details.
4. Taper barrier height to 2'-8'' when Thrie Beam is required. Taper barrier height to 2'-10'' and eliminate F-Shape transition when adjacent to concrete F-Shape barrier.

Note to Designer:
This standard contains details for straight back, diamond back and recessed back parapets. Include the appropriate shape in the Contract Plans.

APPROVAL
DIRECTOR OFFICE OF BRIDGE DEVEL.
DATE: 6/1/05

REVISIONS
SHA
FHWA

FHWA APPROVAL
DATE:

STATE OF MARYLAND
DEPARTMENT OF TRANSPORTATION
STATE HIGHWAY ADMINISTRATION
OFFICE OF BRIDGE DEVELOPMENT

42'' F-SHAPE END POST WITH FENCING OR RAILING
(END POST LENGTH < = 11'-2'')

STANDARD NO. BR-SB(6.57)-05-372

SHEET 1 OF 4

SUBSTRUCTURE ABUT.

'X'	Fence or Railing Type
1'-0''	One Strand Railing
1'-3''	Type II Fence
1'-9''	Two Strand Railing

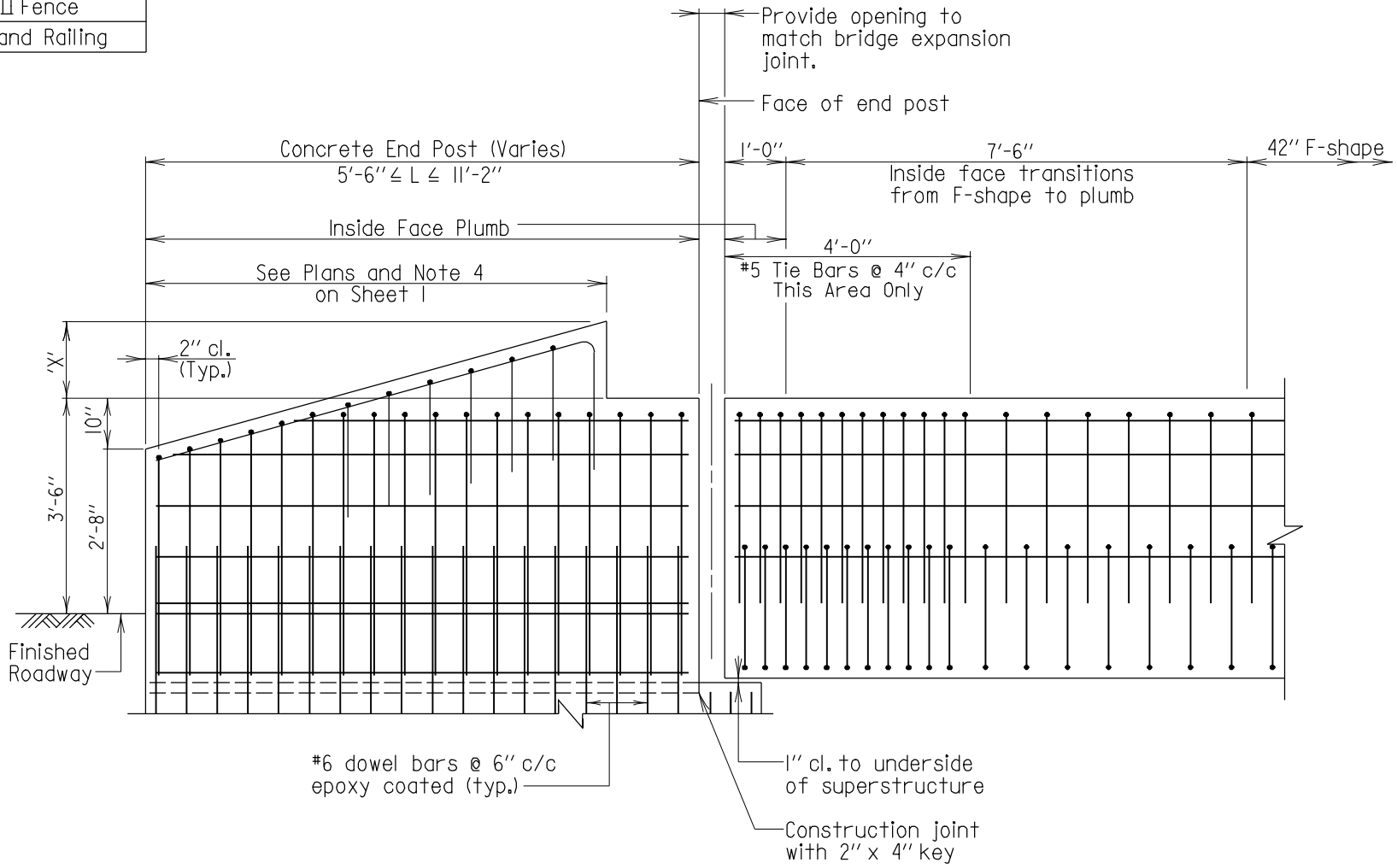

SECTION A-A

Scale: 3/8'' = 1'-0''

Notes:
1. For parapet reinforcing details see sheets 3 and 4.
2. If applicable, reinforcing for coping not shown.
3. Normal deck reinforcing not shown.
4. Fencing or railing not shown.

Note to Designer:
This standard contains details for straight back, diamond back and recessed back parapets. Include the appropriate shape in the Contract Plans.

STATE OF MARYLAND
DEPARTMENT OF TRANSPORTATION
STATE HIGHWAY ADMINISTRATION
OFFICE OF BRIDGE DEVELOPMENT

42'' F-SHAPE END POST WITH FENCING OR RAILING
(END POST LENGTH < = 11'-2'')

STANDARD NO. BR-SB(6.57)-05-372

SHEET 2 OF 4

APPROVAL
OFFICE OF BRIDGE DEVEL. DIRECTOR
DATE: 6/1/05

REVISIONS

SHA	FHWA
11-14-05	

FHWA APPROVAL
DATE:

SUBSTRUCTURE ABUT.

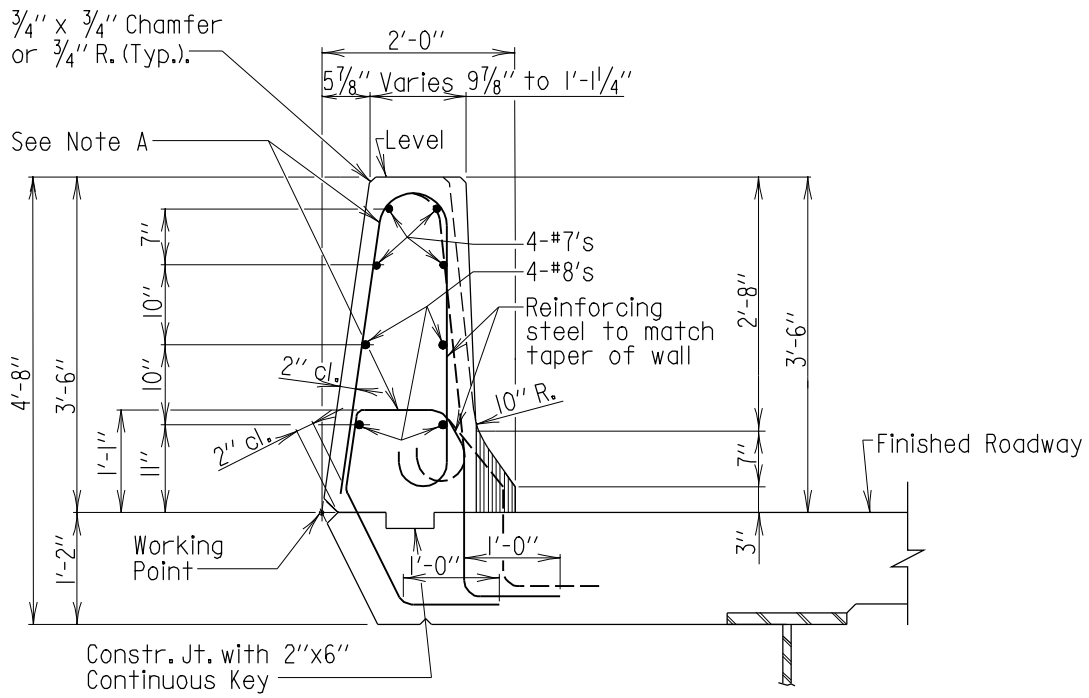

SECTION B-B

Scale: 1/2'' = 1'-0''

Note A:

#5 ∩ @ 4'' c/c
#5 ⊂ @ 4'' c/c
Within end 4'-0'' of bridge deck

#5 ∩ @ 8'' c/c
#5 ⊂ @ 8'' c/c
Alt. @ 4'' max. beyond end 4'-0'' of bridge deck

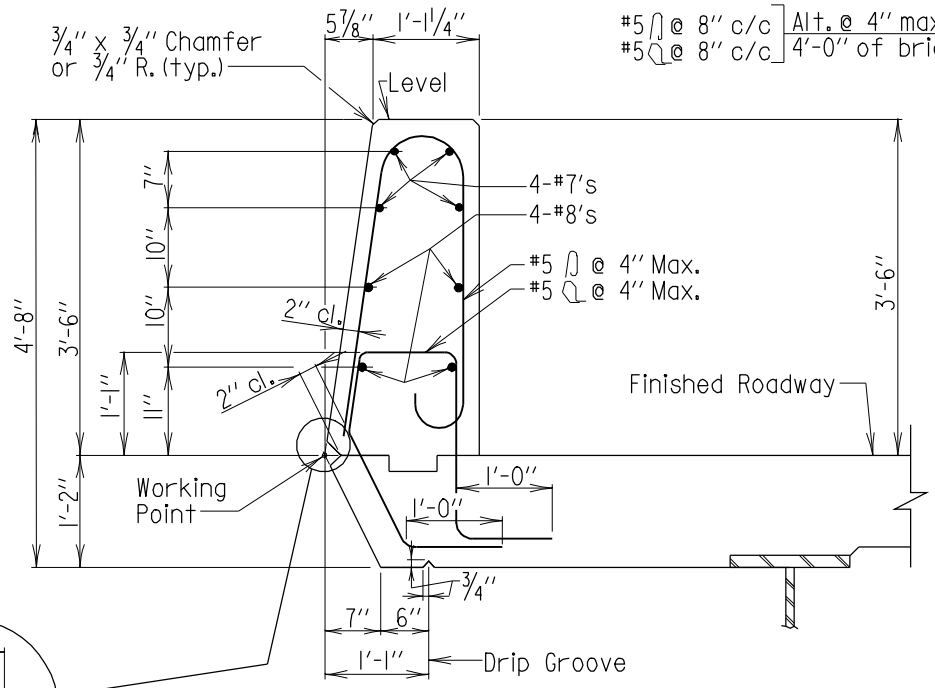

SECTION C-C

Scale: 1/2'' = 1'-0''

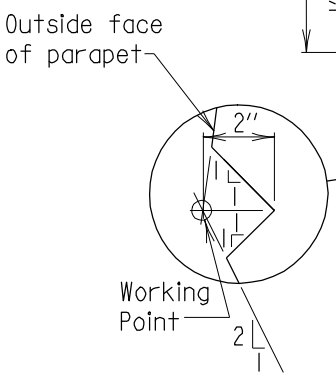

42'' DIAMOND BACK

Note:
Normal deck reinforcing not shown.

APPROVAL	
R. S. Friedman DIRECTOR OFFICE OF BRIDGE DEVEL.	
DATE: 6/1/05	
REVISIONS	
SHA	FHWA

FHWA APPROVAL
DATE:

STATE OF MARYLAND
DEPARTMENT OF TRANSPORTATION
STATE HIGHWAY ADMINISTRATION
OFFICE OF BRIDGE DEVELOPMENT

42'' F-SHAPE END POST WITH FENCING OR RAILING
(END POST LENGTH < = 11'-2'')

STANDARD NO. BR-SB(6.57)-05-372 SHEET 3 OF 4

SUBSTRUCTURE ABUT.

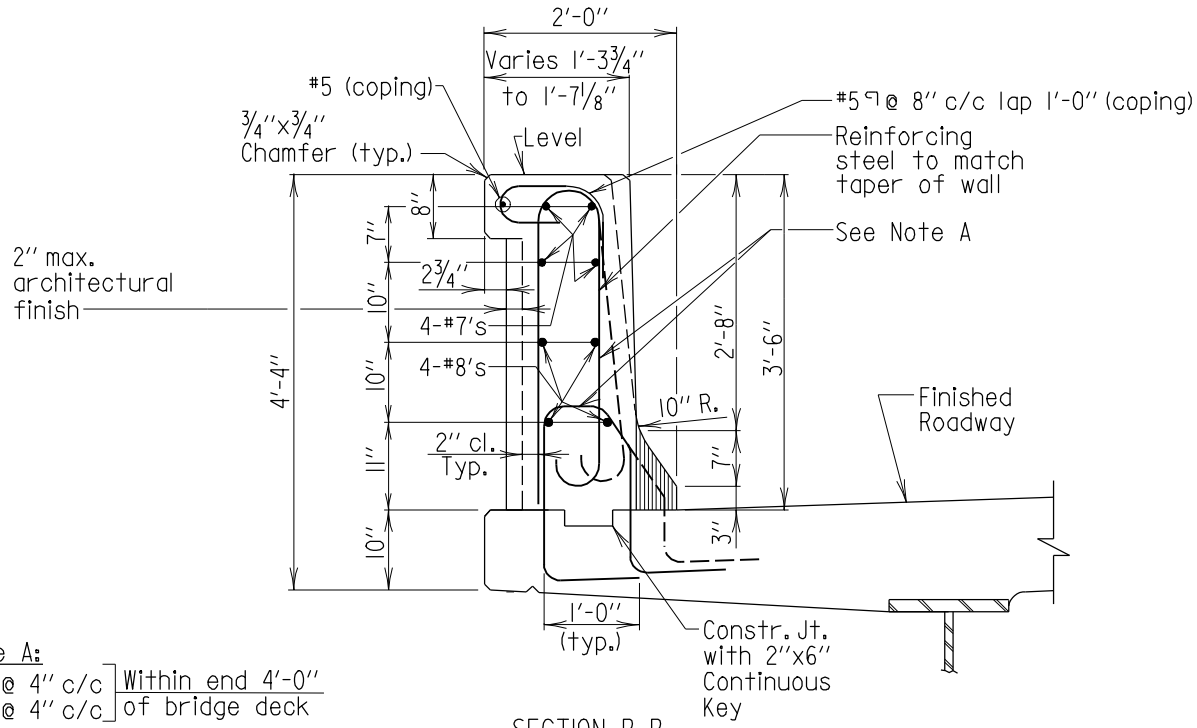

Note A:

#5 ⌈⌋ @ 4" c/c
#5 ⌊⌋ @ 4" c/c
Within end 4'-0" of bridge deck

#5 ⌈⌋ @ 8" c/c
#5 ⌊⌋ @ 8" c/c
Alt. @ 4" max. beyond end 4'-0" of bridge deck

SECTION B-B

Scale: ½"=1'-0"

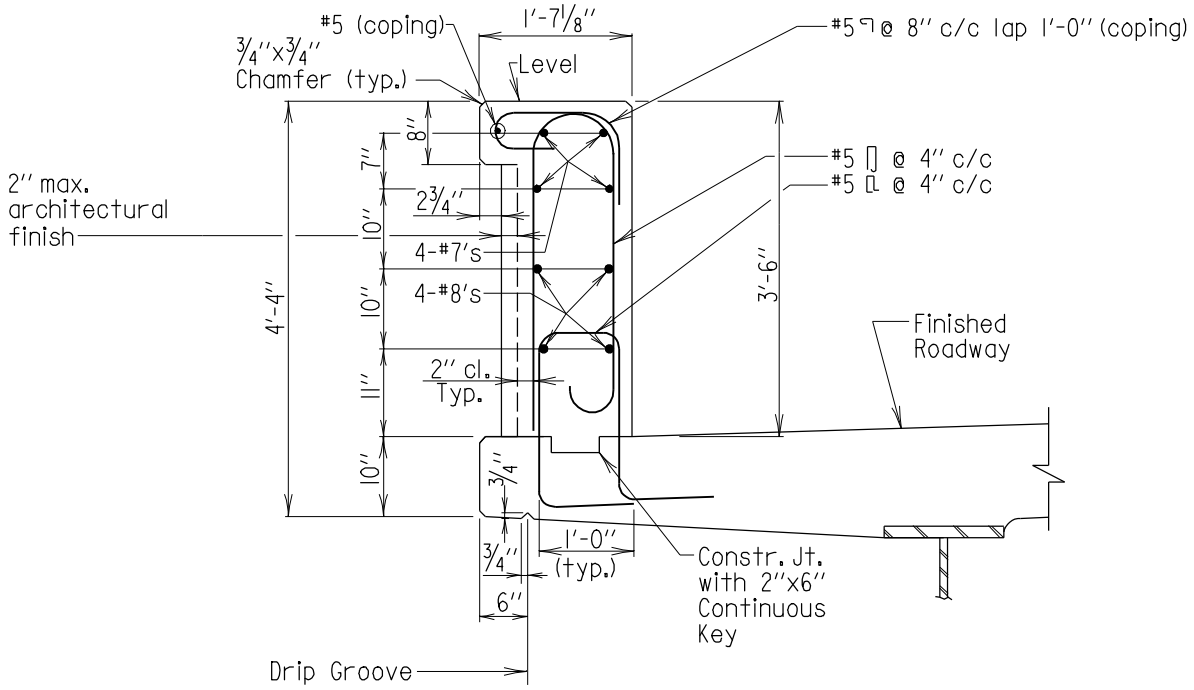

SECTION C-C

Scale: ½"=1'-0"

42" RECESSED BACK

Note:
Normal deck reinforcing not shown.

APPROVAL	
R S Freedman DIRECTOR OFFICE OF BRIDGE DEVEL. DATE: 6/1/05	
REVISIONS	
SHA	FHWA

FHWA APPROVAL
DATE:

STATE OF MARYLAND
DEPARTMENT OF TRANSPORTATION
STATE HIGHWAY ADMINISTRATION
OFFICE OF BRIDGE DEVELOPMENT

42" F-SHAPE END POST WITH FENCING OR RAILING
(END POST LENGTH < = 11'-2")

STANDARD NO. BR-SB(6.57)-05-372 SHEET 3 OF 4

SUBSTRUCTURE ABUT.

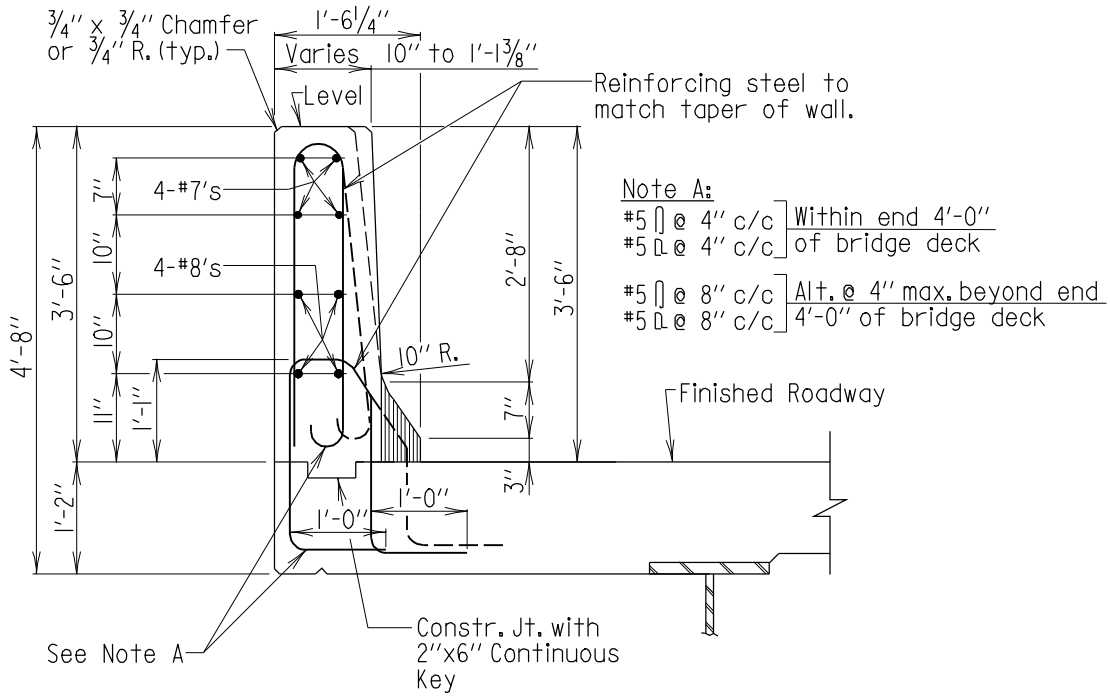

SECTION B-B

Scale: 1/2''=1'-0''

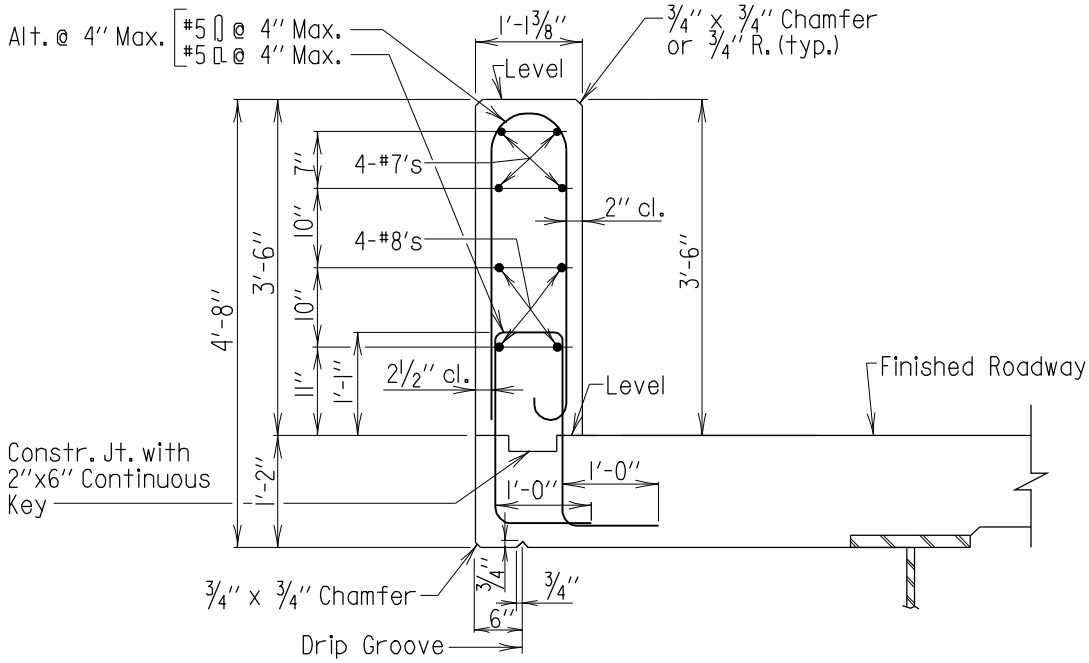

SECTION C-C

Scale: 1/2''=1'-0''

42'' STRAIGHT BACK

Note:
Normal deck reinforcing not shown.

APPROVAL	
R S Friedman DIRECTOR OFFICE OF BRIDGE DEVEL. DATE: 6/1/05	
REVISIONS	
SHA	FHWA

FHWA APPROVAL
DATE:

STATE OF MARYLAND
DEPARTMENT OF TRANSPORTATION
STATE HIGHWAY ADMINISTRATION
OFFICE OF BRIDGE DEVELOPMENT

42'' F-SHAPE END POST WITH FENCING OR RAILING
(END POST LENGTH < = 11'-2'')

STANDARD NO. BR-SB(6.57)-05-372 SHEET 3 OF 4

SUBSTRUCTURE ABUT.

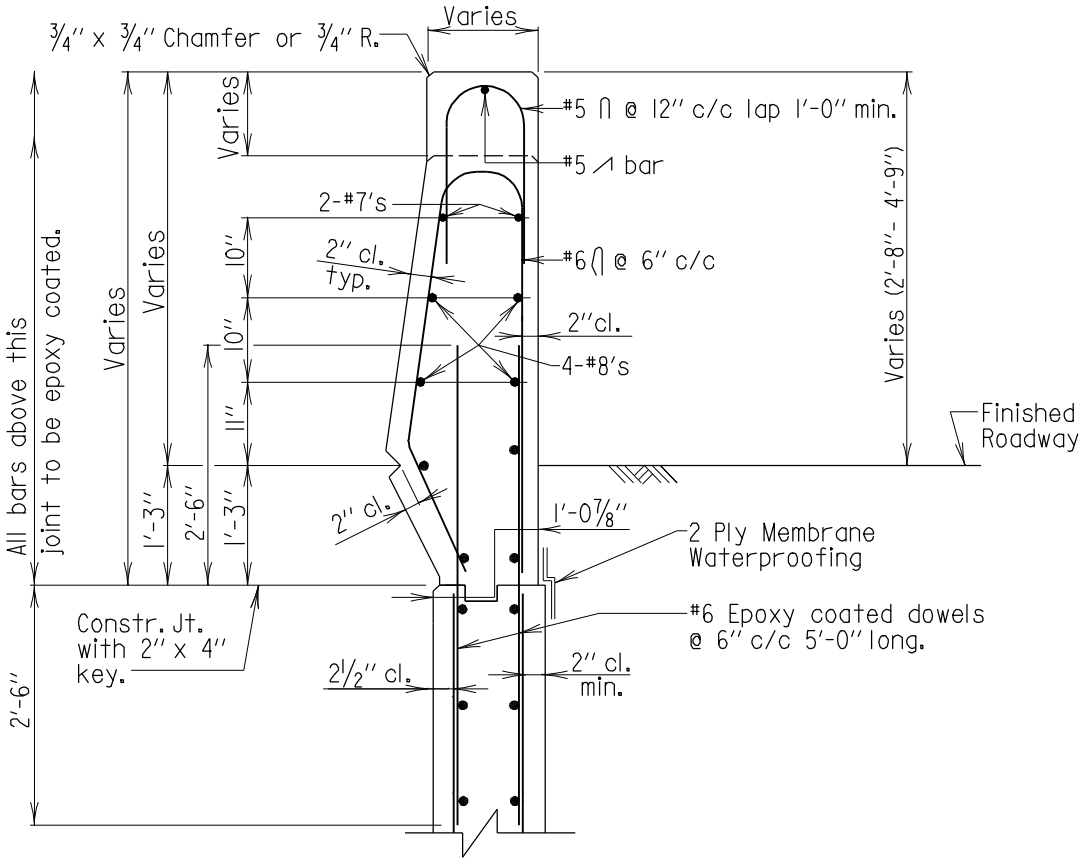

SECTION D-D

Scale: 1/2" = 1'-0"

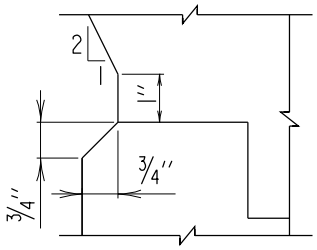

GROOVE DETAIL

Scale: 3" = 1'-0"

42" DIAMOND BACK

Note:
All longitudinal bars are #5 spaced as shown unless noted otherwise.

APPROVAL	
R.S. Freedman DIRECTOR OFFICE OF BRIDGE DEVEL. DATE: 6/1/05	
REVISIONS	
SHA	FHWA
11-14-05	

FHWA APPROVAL
DATE:

STATE OF MARYLAND
DEPARTMENT OF TRANSPORTATION
STATE HIGHWAY ADMINISTRATION
OFFICE OF BRIDGE DEVELOPMENT

42" F-SHAPE END POST WITH FENCING OR RAILING
(END POST LENGTH < = 11'-2")

STANDARD NO. BR-SB(6.57)-05-372 SHEET 4 OF 4

SUBSTRUCTURE ABUT.

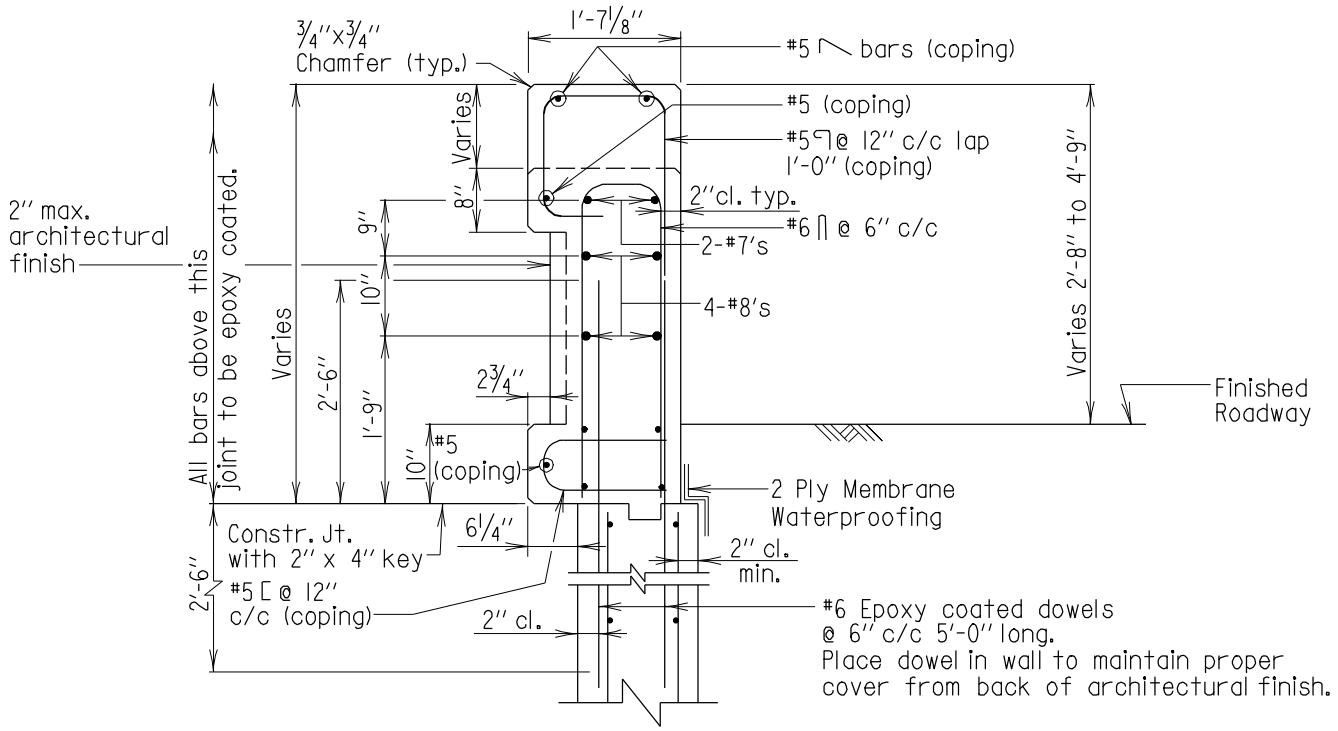

SECTION D-D

Scale: 1/2"=1'-0"

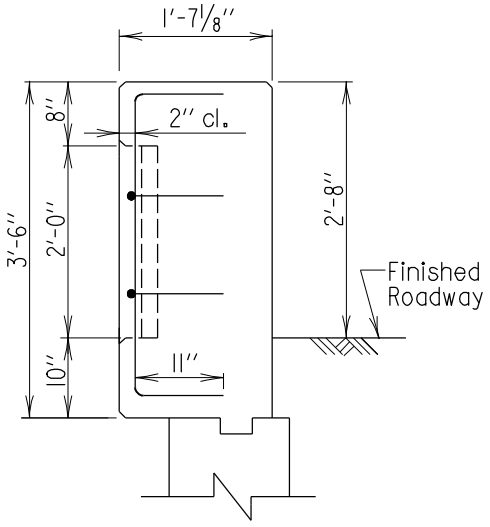

SECTION E-E

Scale: 1/2"=1'-0"

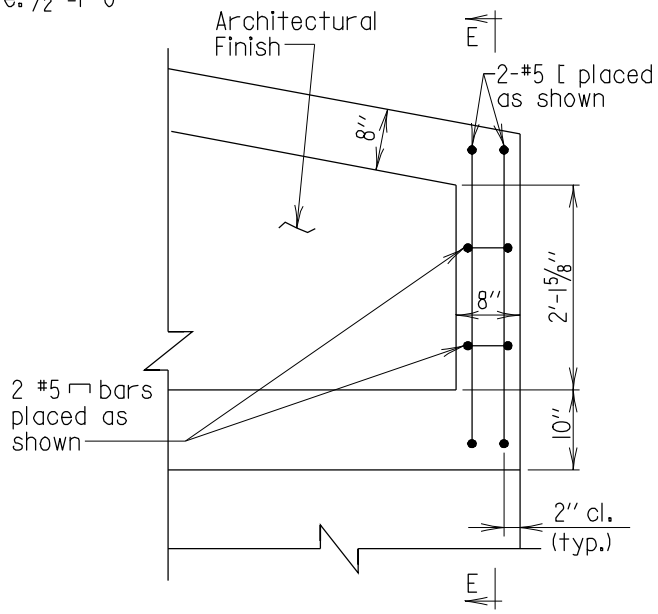

PARTIAL REAR ELEVATION

Scale: 1/2"=1'-0"

42" RECESSED BACK

Note:
All longitudinal bars are #5 spaced as shown unless noted otherwise.

APPROVAL	
R S Freedman DIRECTOR OFFICE OF BRIDGE DEVEL. DATE: 6/1/05	
REVISIONS	
SHA	FHWA
11-14-05	

FHWA APPROVAL
DATE:

STATE OF MARYLAND
DEPARTMENT OF TRANSPORTATION
STATE HIGHWAY ADMINISTRATION
OFFICE OF BRIDGE DEVELOPMENT

42" F-SHAPE END POST WITH FENCING OR RAILING
(END POST LENGTH < = 11'-2")

STANDARD NO. BR-SB(6.57)-05-372 SHEET 4 OF 4

SUBSTRUCTURE ABUT.

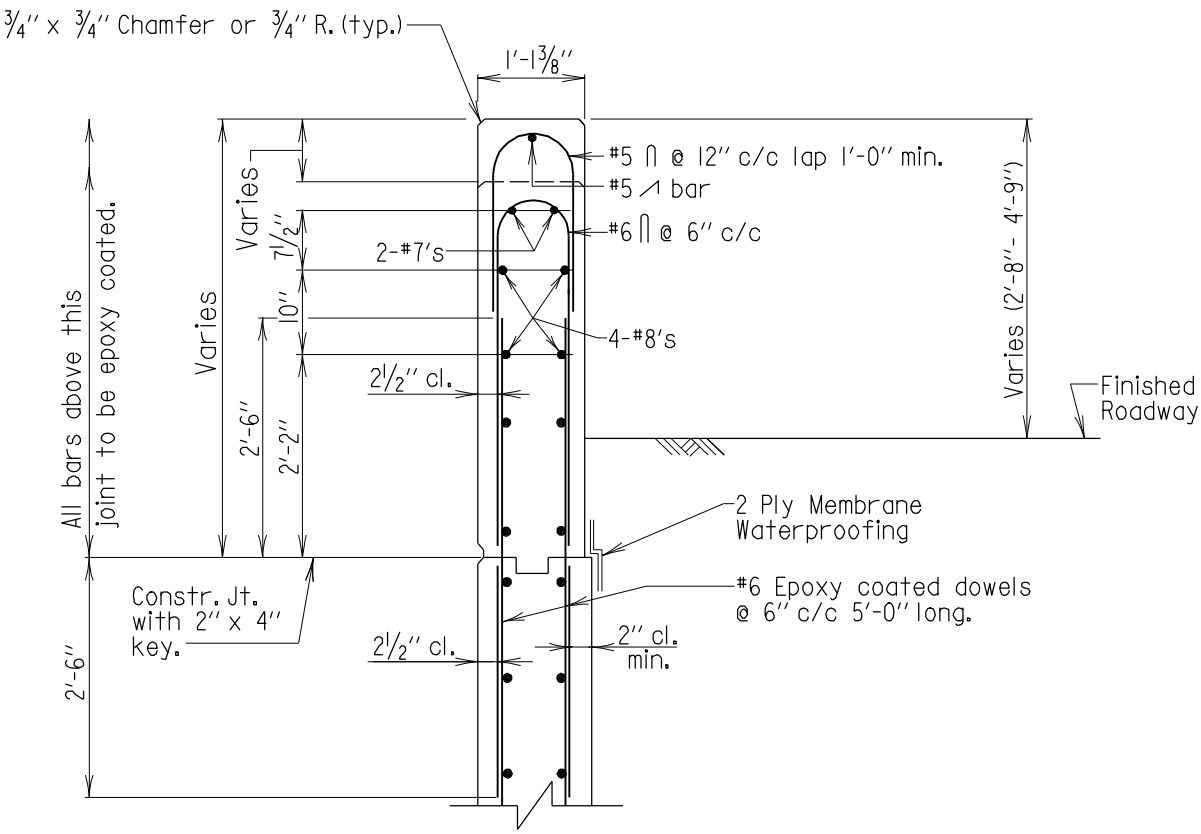

SECTION D-D

Scale: 1/2'' = 1'-0''

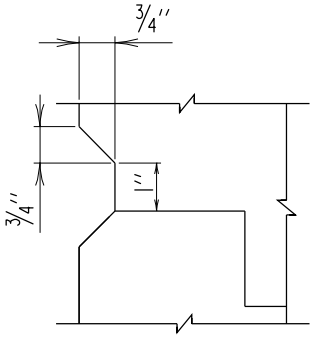

GROOVE DETAIL

Scale: 3'' = 1'-0''

42'' STRAIGHT BACK

Note:
All longitudinal bars are #5 spaced as shown unless noted otherwise.

APPROVAL	
R S Freedman DIRECTOR OFFICE OF BRIDGE DEVEL. DATE: 6/1/05	
REVISIONS	
SHA	FHWA
11-14-05	·
·	·
·	·
·	·

FHWA APPROVAL
DATE:

STATE OF MARYLAND
DEPARTMENT OF TRANSPORTATION
STATE HIGHWAY ADMINISTRATION
OFFICE OF BRIDGE DEVELOPMENT

42'' F-SHAPE END POST WITH FENCING OR RAILING
(END POST LENGTH < = 11'-2'')

STANDARD NO. BR-SB(6.57)-05-372 SHEET 4 OF 4

SUBSTRUCTURE ABUT.

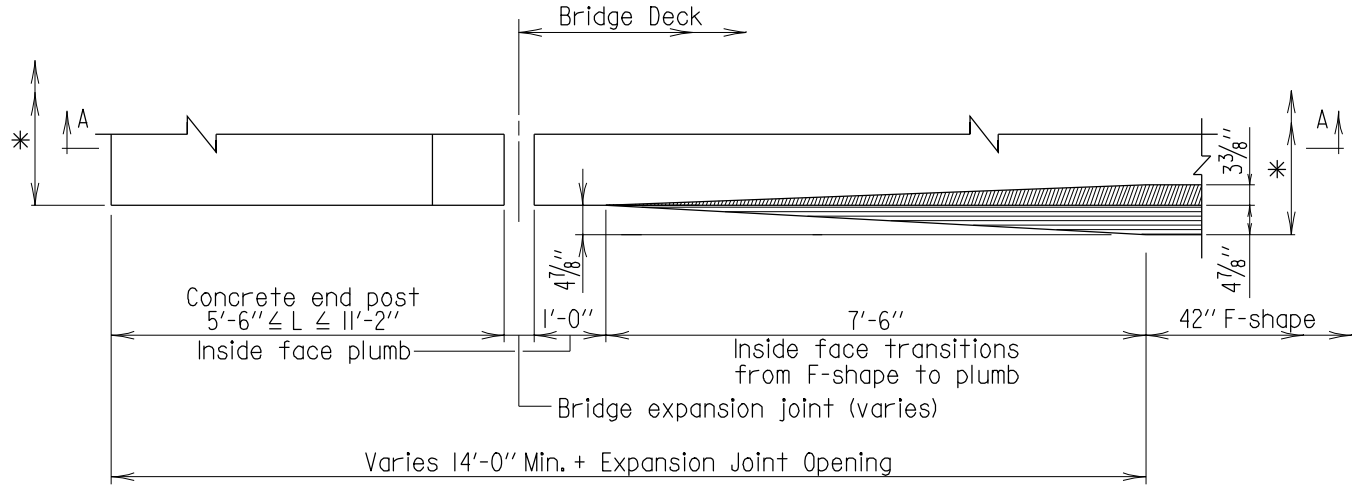

* For overall parapet dimension see sheets 3 and 4.

PLAN

Scale: 3/8" = 1'-0"

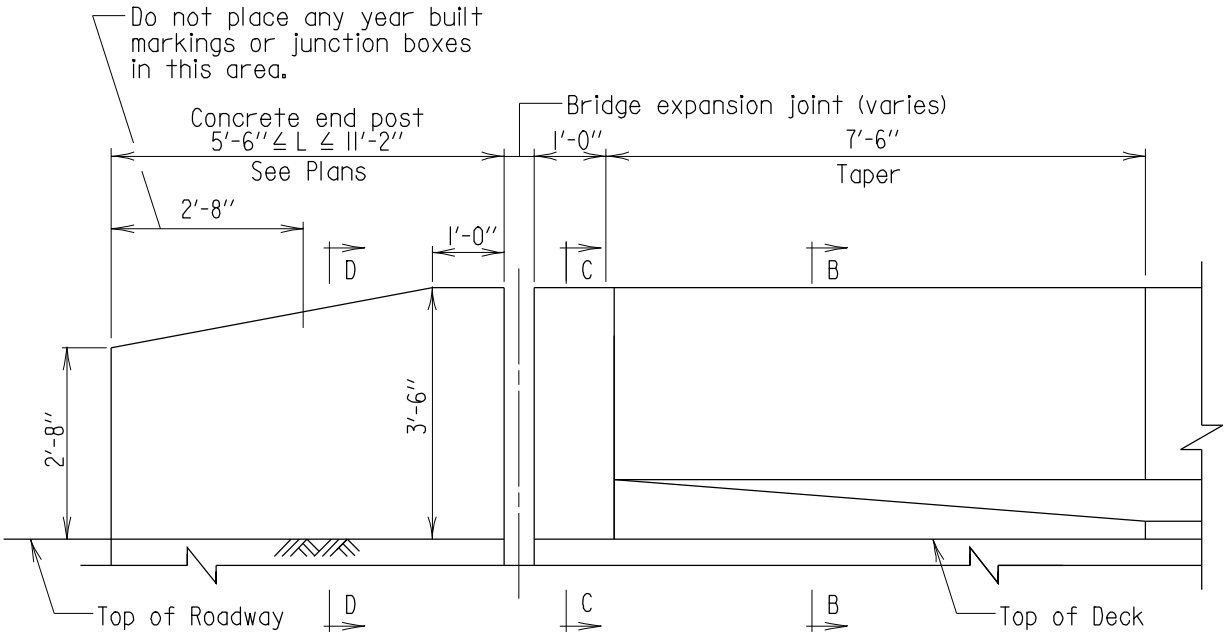

ELEVATION

Scale: 3/8" = 1'-0"

Note to Designer:
This standard contains details for straight back, diamond back and recessed back parapets. Include the appropriate shape in the Contract Plans.

Notes:
1. Use on approach end of bridge when end post is less than 11'-2".
2. Thrie Beam Traffic Barrier attachment not shown.
3. Taper barrier height to 2'-8" when Thrie Beam is required. Continue at 3'-6" and eliminate transition of F-Shape when adjacent to concrete F-Shape barrier.

APPROVAL
R S Freedman DIRECTOR OFFICE OF BRIDGE DEVEL.
DATE: 6/1/05

REVISIONS	
SHA	FHWA
.	.
.	.
.	.
.	.

FHWA APPROVAL
DATE: .

STATE OF MARYLAND
DEPARTMENT OF TRANSPORTATION
STATE HIGHWAY ADMINISTRATION
OFFICE OF BRIDGE DEVELOPMENT

42" F-SHAPE END POST WITHOUT FENCING OR RAILING
(APPROACH END, END POST LENGTH < = 11'-2")

STANDARD NO. BR-SB(6.58)-05-373 SHEET 1 OF 4

SUBSTRUCTURE ABUT.

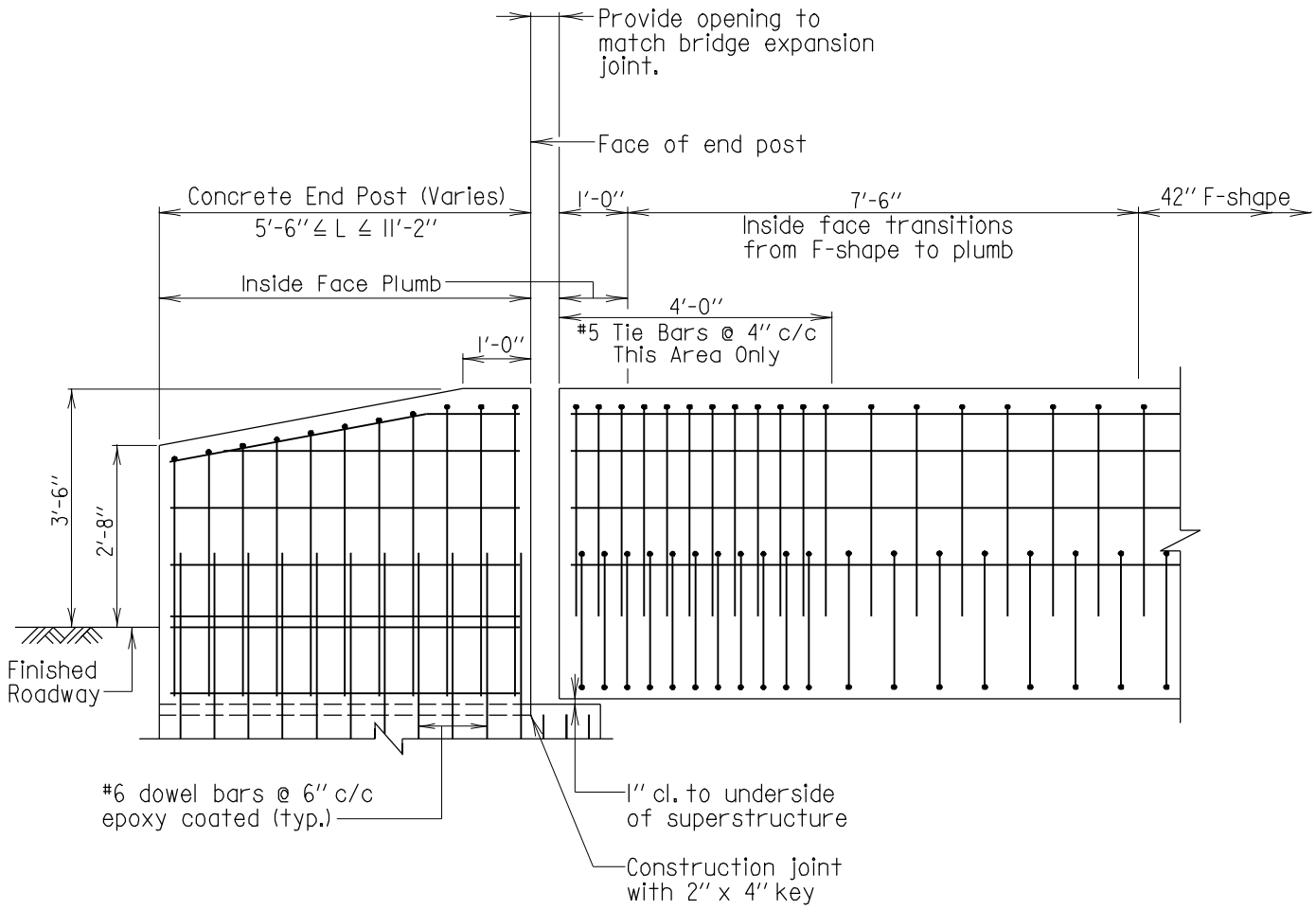

SECTION A-A

Scale: 3/8" = 1'-0"

Note to Designer:
This standard contains details for straight back, diamond back and recessed back parapets. Include the appropriate shape in the Contract Plans.

Notes:
1. For parapet reinforcing details see sheets 3 and 4.
2. If applicable, reinforcing for coping not shown.
3. Normal deck reinforcing not shown.

APPROVAL	
R S Friedman DIRECTOR OFFICE OF BRIDGE DEVEL.	
DATE: 6/1/05	
REVISIONS	
SHA	FHWA
11-14-05	·
·	·
·	·
·	·

FHWA APPROVAL
DATE:

STATE OF MARYLAND
DEPARTMENT OF TRANSPORTATION
STATE HIGHWAY ADMINISTRATION
OFFICE OF BRIDGE DEVELOPMENT

42" F-SHAPE END POST WITHOUT FENCING OR RAILING
(APPROACH END, END POST LENGTH < = 11'-2")

STANDARD NO. BR-SB(6.58)-05-373 SHEET 2 OF 4

SUBSTRUCTURE ABUT.

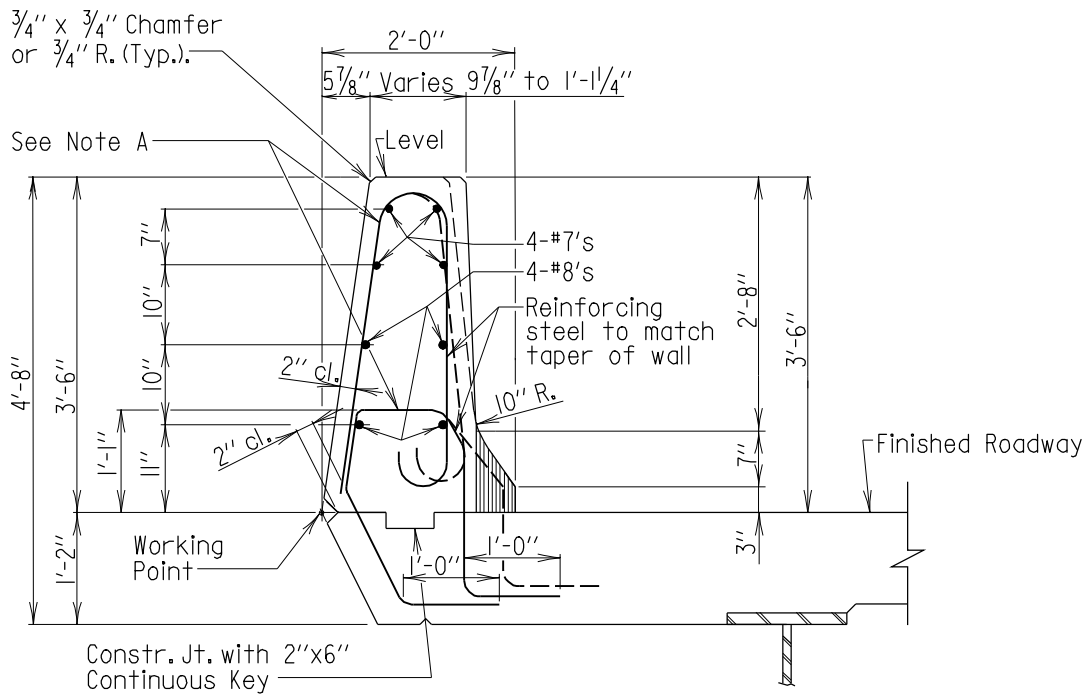

SECTION B-B

Scale: 1/2" = 1'-0"

Note A:

#5 @ 4" c/c
#5 @ 4" c/c
Within end 4'-0" of bridge deck

#5 @ 8" c/c
#5 @ 8" c/c
Alt. @ 4" max. beyond end 4'-0" of bridge deck

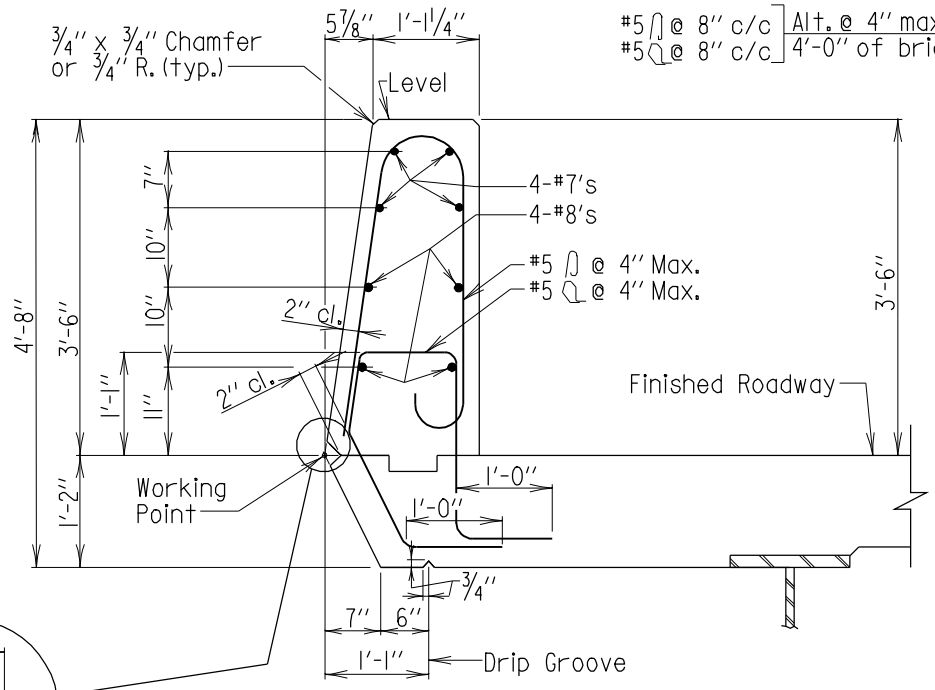

SECTION C-C

Scale: 1/2" = 1'-0"

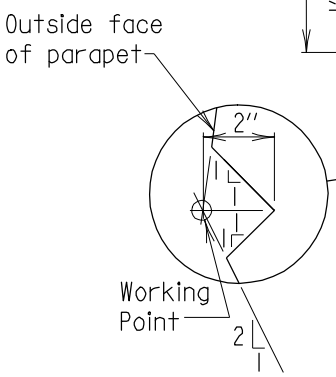

42'' DIAMOND BACK

Note:
Normal deck reinforcing not shown.

APPROVAL	
DIRECTOR OFFICE OF BRIDGE DEVEL.	
DATE: 6/1/05	
REVISIONS	
SHA	FHWA

FHWA APPROVAL
DATE:

STATE OF MARYLAND
DEPARTMENT OF TRANSPORTATION
STATE HIGHWAY ADMINISTRATION
OFFICE OF BRIDGE DEVELOPMENT

42" F-SHAPE END POST WITHOUT FENCING OR RAILING
(APPROACH END, END POST LENGTH < = 11'-2")

STANDARD NO. BR-SB(6.58)-05-373 SHEET 3 OF 4

SUBSTRUCTURE ABUT.

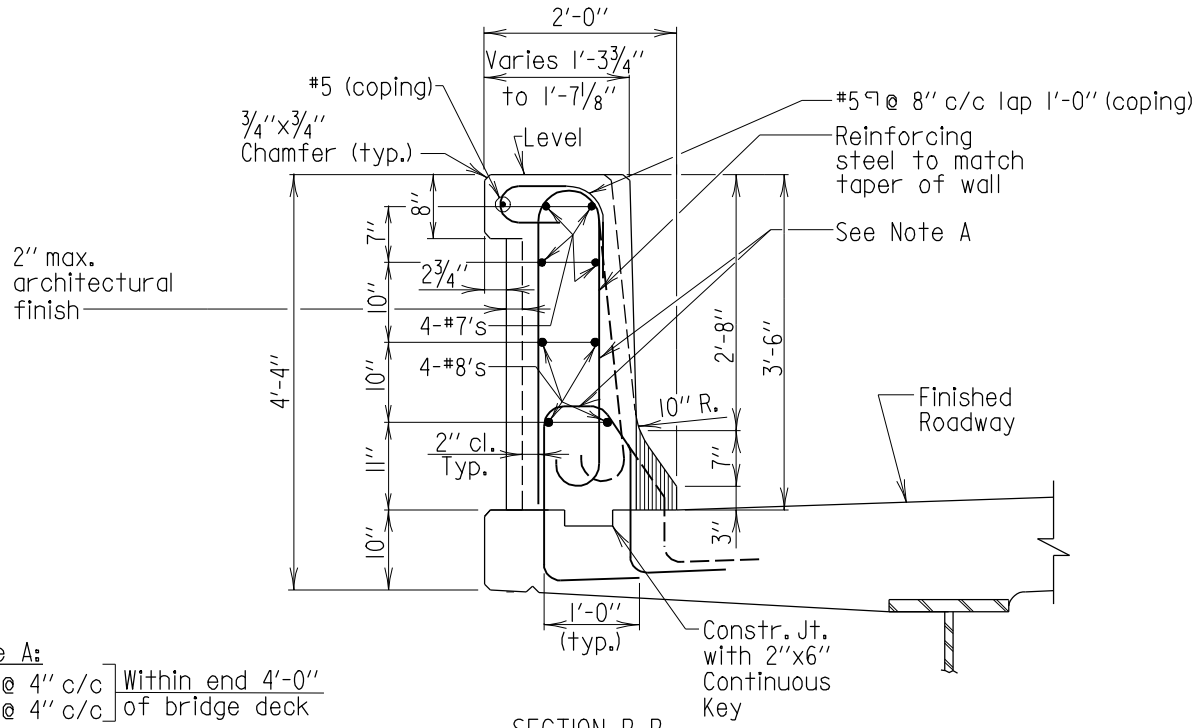

Note A:

#5 ⌉ @ 4" c/c
#5 ⌊ @ 4" c/c
Within end 4'-0" of bridge deck

#5 ⌉ @ 8" c/c
#5 ⌊ @ 8" c/c
Alt. @ 4" max. beyond end 4'-0" of bridge deck

SECTION B-B

Scale: ½"=1'-0"

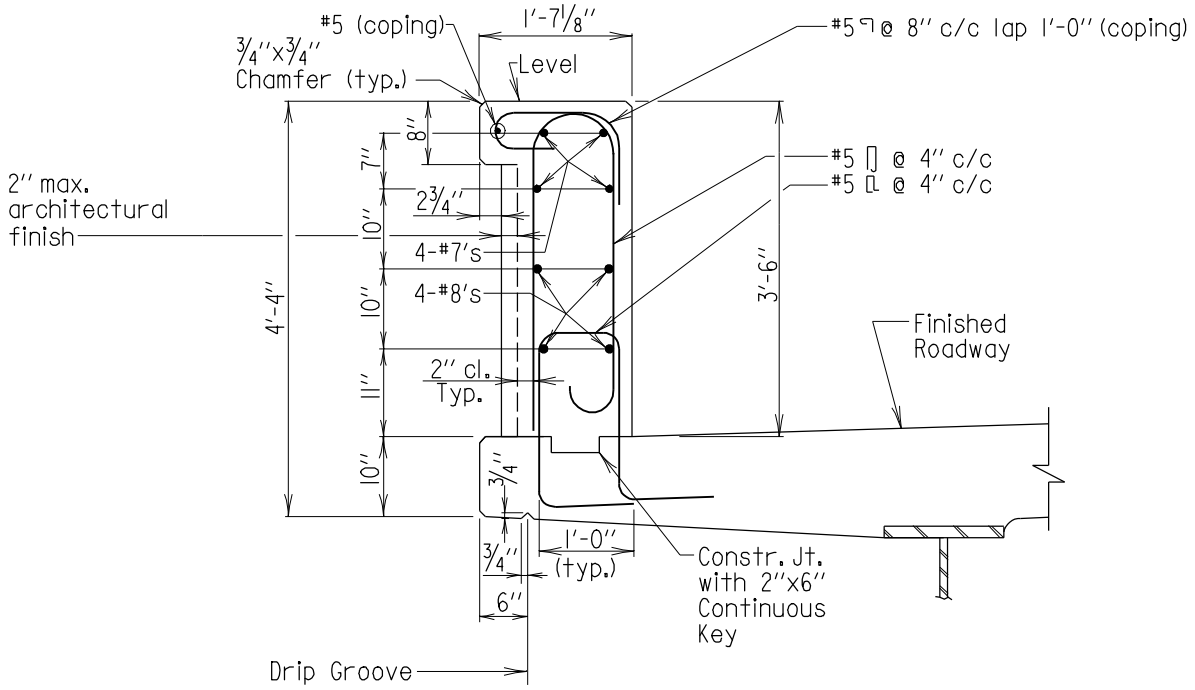

SECTION C-C

Scale: ½"=1'-0"

42'' RECESSED BACK

Note:
Normal deck reinforcing not shown.

APPROVAL	
R.S. Freedman DIRECTOR OFFICE OF BRIDGE DEVEL. DATE: 6/1/05	
REVISIONS	
SHA	FHWA

FHWA APPROVAL
DATE:

STATE OF MARYLAND
DEPARTMENT OF TRANSPORTATION
STATE HIGHWAY ADMINISTRATION
OFFICE OF BRIDGE DEVELOPMENT

42'' F-SHAPE END POST WITHOUT FENCING OR RAILING
(APPROACH END, END POST LENGTH < = 11'-2'')

STANDARD NO. BR-SB(6.58)-05-373 SHEET 3 OF 4

SUBSTRUCTURE ABUT.

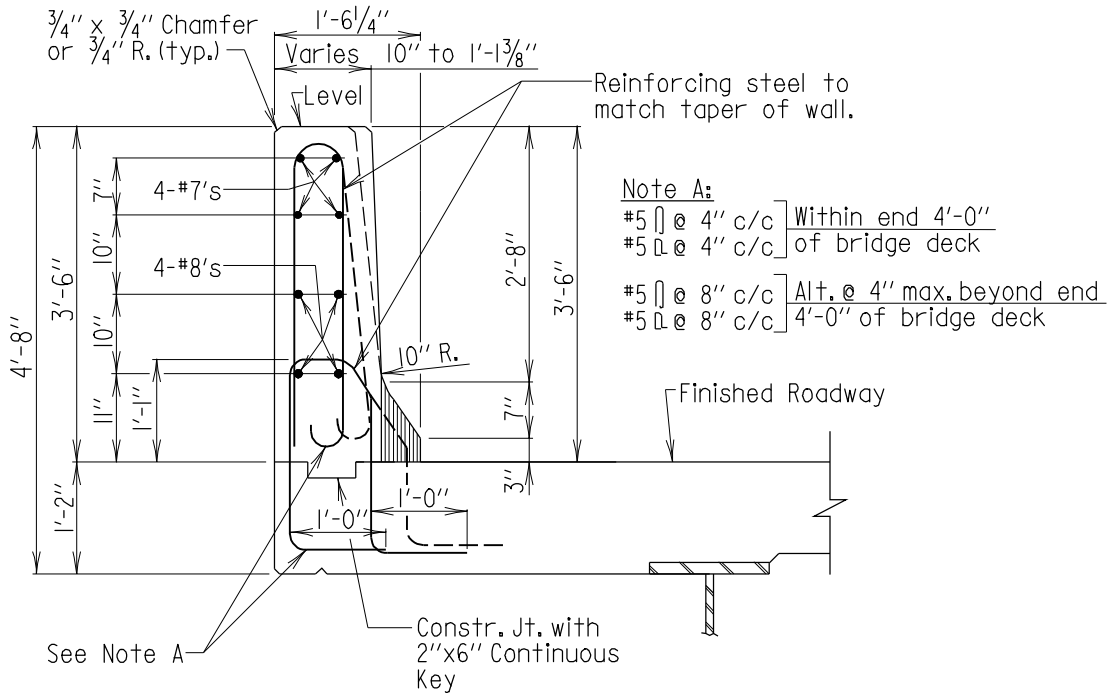

SECTION B-B

Scale: 1/2''=1'-0''

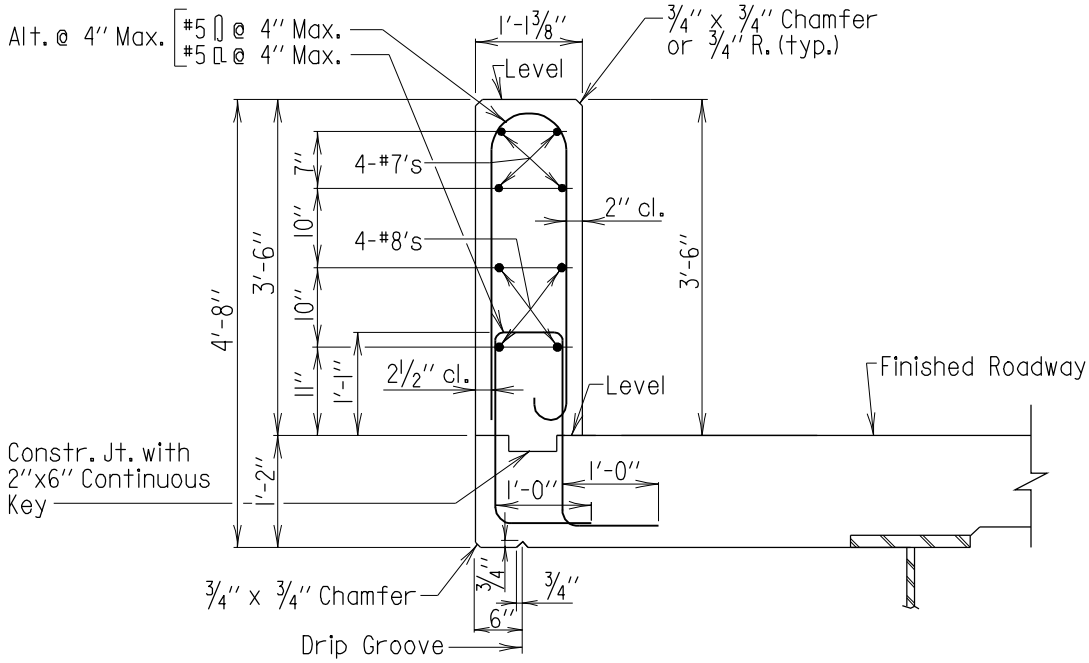

SECTION C-C

Scale: 1/2''=1'-0''

42'' STRAIGHT BACK

Note:
Normal deck reinforcing not shown.

APPROVAL	
R S Freedman DIRECTOR OFFICE OF BRIDGE DEVEL. DATE: 6/1/05	
REVISIONS	
SHA	FHWA

FHWA APPROVAL
DATE:

STATE OF MARYLAND
DEPARTMENT OF TRANSPORTATION
STATE HIGHWAY ADMINISTRATION
OFFICE OF BRIDGE DEVELOPMENT

42'' F-SHAPE END POST WITHOUT FENCING OR RAILING
(APPROACH END, END POST LENGTH < = 11'-2'')

STANDARD NO. BR-SB(6.58)-05-373 SHEET 3 OF 4

SUBSTRUCTURE ABUT.

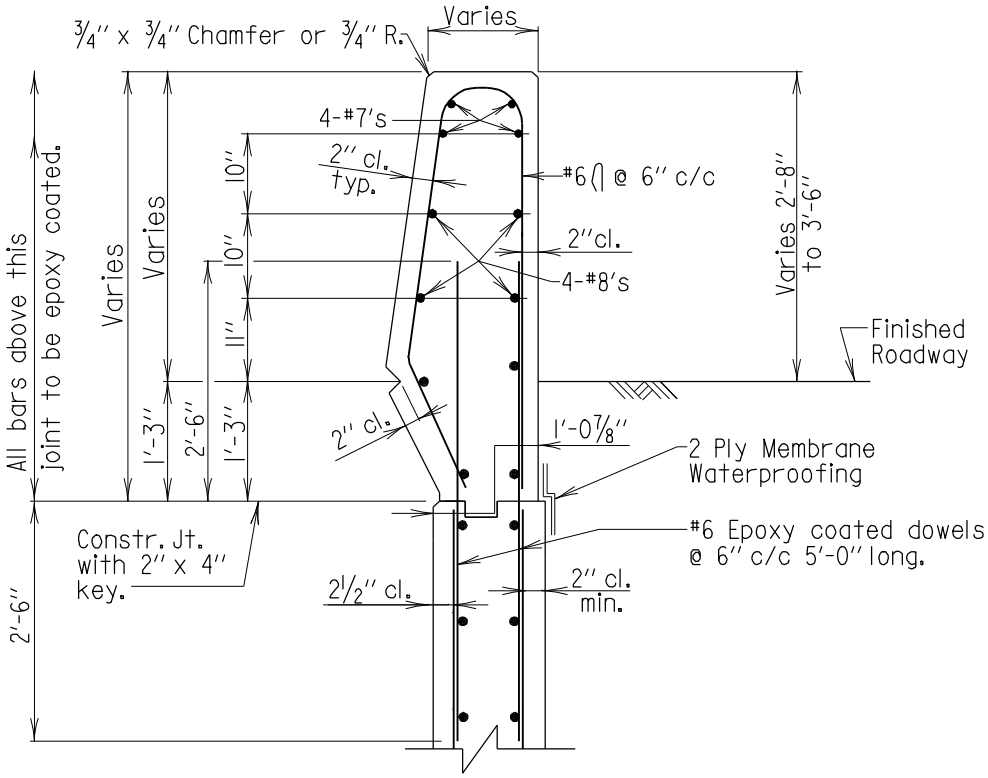

SECTION D-D

Scale: 1/2'' = 1'-0''

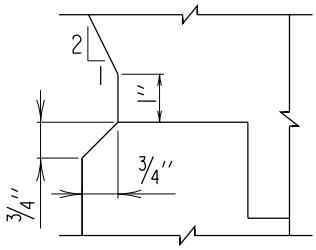

GROOVE DETAIL

Scale: 3'' = 1'-0''

42'' DIAMOND BACK

Note:
All longitudinal bars are #5 spaced as shown unless noted otherwise.

APPROVAL	
R.S. Freedman DIRECTOR OFFICE OF BRIDGE DEVEL. DATE: 6/1/05	
REVISIONS	
SHA	FHWA
11-14-05	·
·	·
·	·
·	·

FHWA APPROVAL
DATE: .

STATE OF MARYLAND
DEPARTMENT OF TRANSPORTATION
STATE HIGHWAY ADMINISTRATION
OFFICE OF BRIDGE DEVELOPMENT

42'' F-SHAPE END POST WITHOUT FENCING OR RAILING
(APPROACH END, END POST LENGTH < = 11'-2'')

STANDARD NO. BR-SB(6.58)-05-373 SHEET 4 OF 4

SUBSTRUCTURE ABUT.

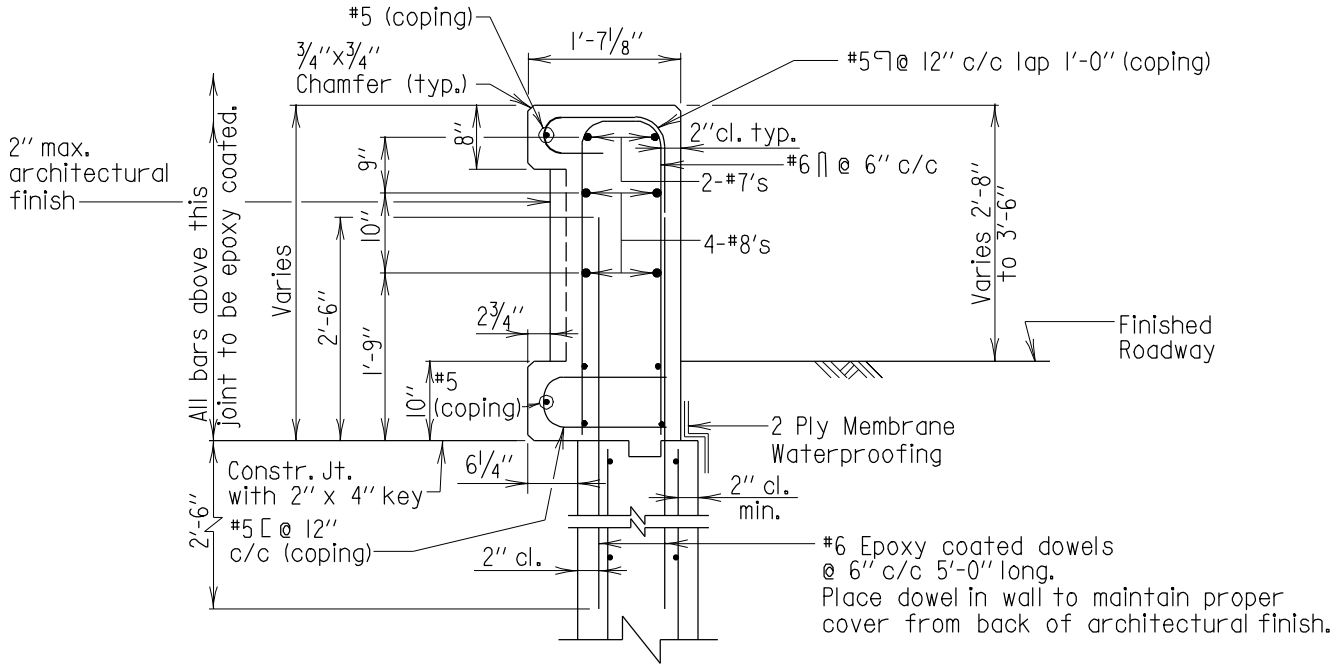

SECTION D-D

Scale: 1/2"=1'-0"

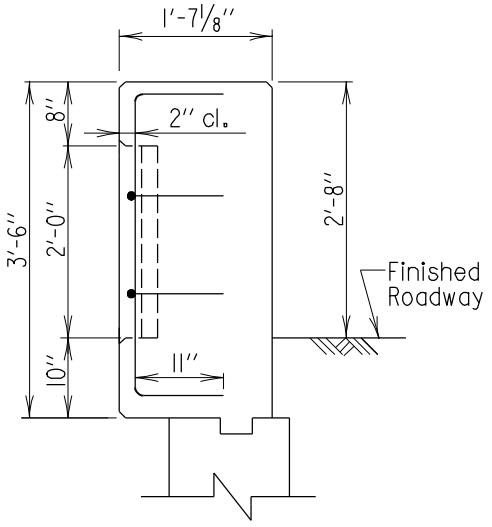

SECTION E-E

Scale: 1/2"=1'-0"

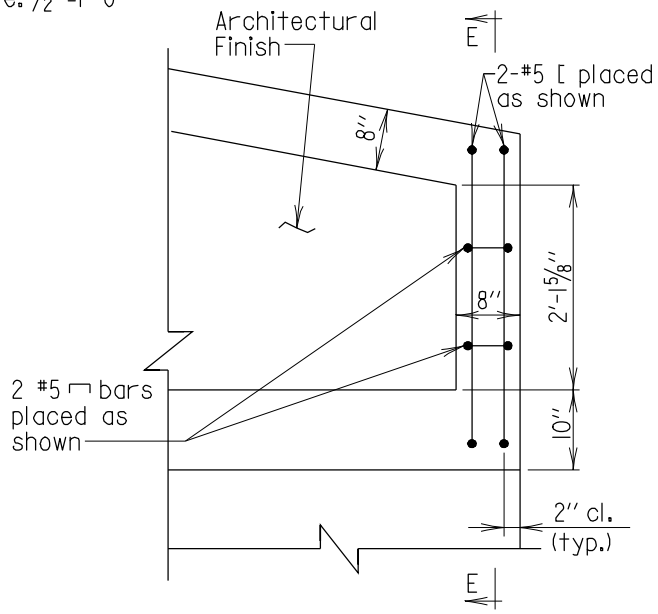

PARTIAL REAR ELEVATION

Scale: 1/2"=1'-0"

42'' RECESSED BACK

Note:
All longitudinal bars are #5 spaced as shown unless noted otherwise.

APPROVAL
R S Freedman DIRECTOR OFFICE OF BRIDGE DEVEL.
DATE: 6/1/05

REVISIONS	
SHA	FHWA
11-14-05	·
·	·
·	·
·	·

FHWA APPROVAL
DATE:

STATE OF MARYLAND
DEPARTMENT OF TRANSPORTATION
STATE HIGHWAY ADMINISTRATION
OFFICE OF BRIDGE DEVELOPMENT

42'' F-SHAPE END POST WITHOUT FENCING OR RAILING (APPROACH END, END POST LENGTH < = 11'-2'')

STANDARD NO. BR-SB(6.58)-05-373 SHEET 4 OF 4

SUBSTRUCTURE ABUT.

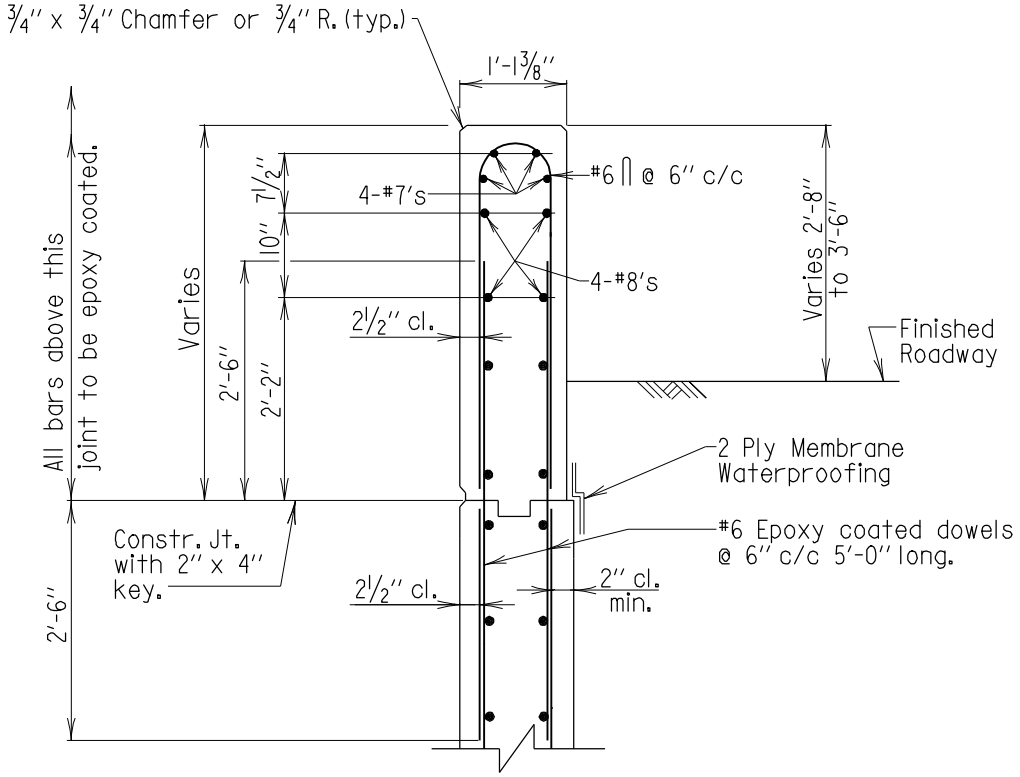

SECTION D-D

Scale: 1/2'' = 1'-0''

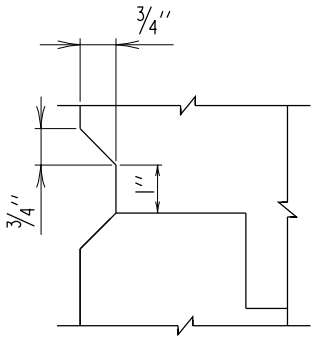

GROOVE DETAIL

Scale: 3'' = 1'-0''

42'' STRAIGHT BACK

Note:
All longitudinal bars are #5 spaced as shown unless noted otherwise.

APPROVAL	
R S Freedman DIRECTOR OFFICE OF BRIDGE DEVEL. DATE: 6/1/05	
REVISIONS	
SHA	FHWA
11-14-05	·
·	·
·	·
·	·

FHWA APPROVAL
DATE:

STATE OF MARYLAND
DEPARTMENT OF TRANSPORTATION
STATE HIGHWAY ADMINISTRATION
OFFICE OF BRIDGE DEVELOPMENT

42'' F-SHAPE END POST WITHOUT FENCING OR RAILING
(APPROACH END, END POST LENGTH < = 11'-2'')

STANDARD NO. BR-SB(6.58)-05-373 SHEET 4 OF 4

SUBSTRUCTURE ABUT.