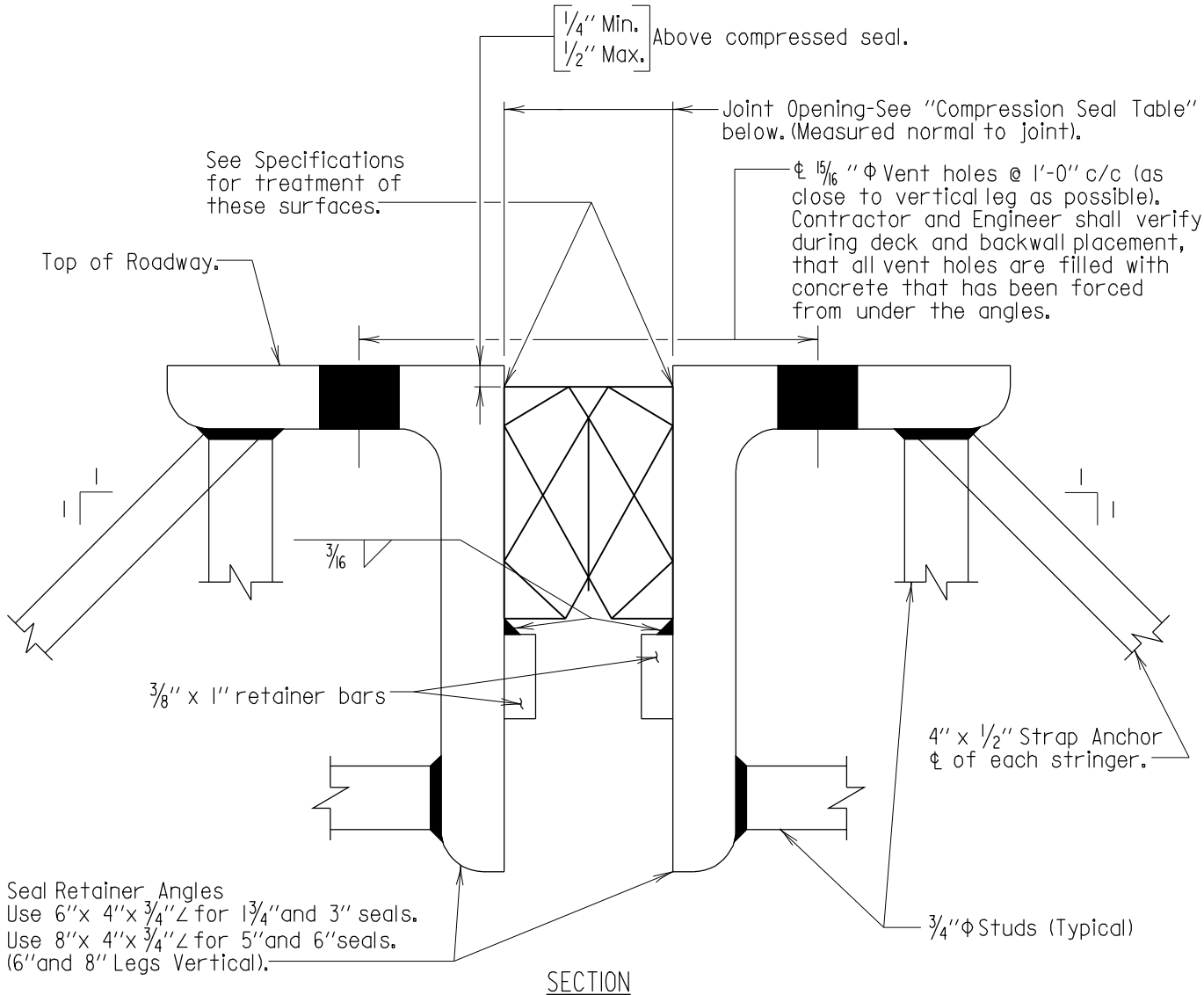

SECTION
Scale: 3"=1'-0"

COMPRESSION SEAL TABLE

Location	Uncompressed Seal Width	Joint Opening @						Movement Rating
		40°F	50°F	60°F	70°F	80°F	90°F	
·	1 3/4"	·	·	1 1/8"	·	·	·	0.66"
·	3"	·	·	1 15/16"	·	·	·	1.25"
·	5"	·	·	3"	·	·	·	2.50"
·	6"	·	·	3 5/8"	·	·	·	2.85"
·	·	·	·	·	·	·	·	·

Note:
1. The 1 3/4" and 3" seals to be one piece for full length of seal (no joints).
2. The 5" and 6" seals may have one shop splice per joint, if the length of joint exceeds 50'. Splice shall be at least 15' from gutter line.

APPROVAL	
E.S. Freedman DIRECTOR OFFICE OF BRIDGE DEVEL.	
DATE: 1/6/78	
REVISIONS	
SHA	FHWA
11-17-97	·
3-20-01	·
1-7-02	·
7-19-06	·

FHWA APPROVAL
DATE: 1-31-78

STATE OF MARYLAND
DEPARTMENT OF TRANSPORTATION
STATE HIGHWAY ADMINISTRATION
OFFICE OF BRIDGE DEVELOPMENT

COMPRESSION SEAL JOINT AND RETAINING ANGLE DETAIL

STANDARD NO. BR-SS(7.01)-77-63 SHEET 1 OF 1

SUPER-ROADWAY JOINTS

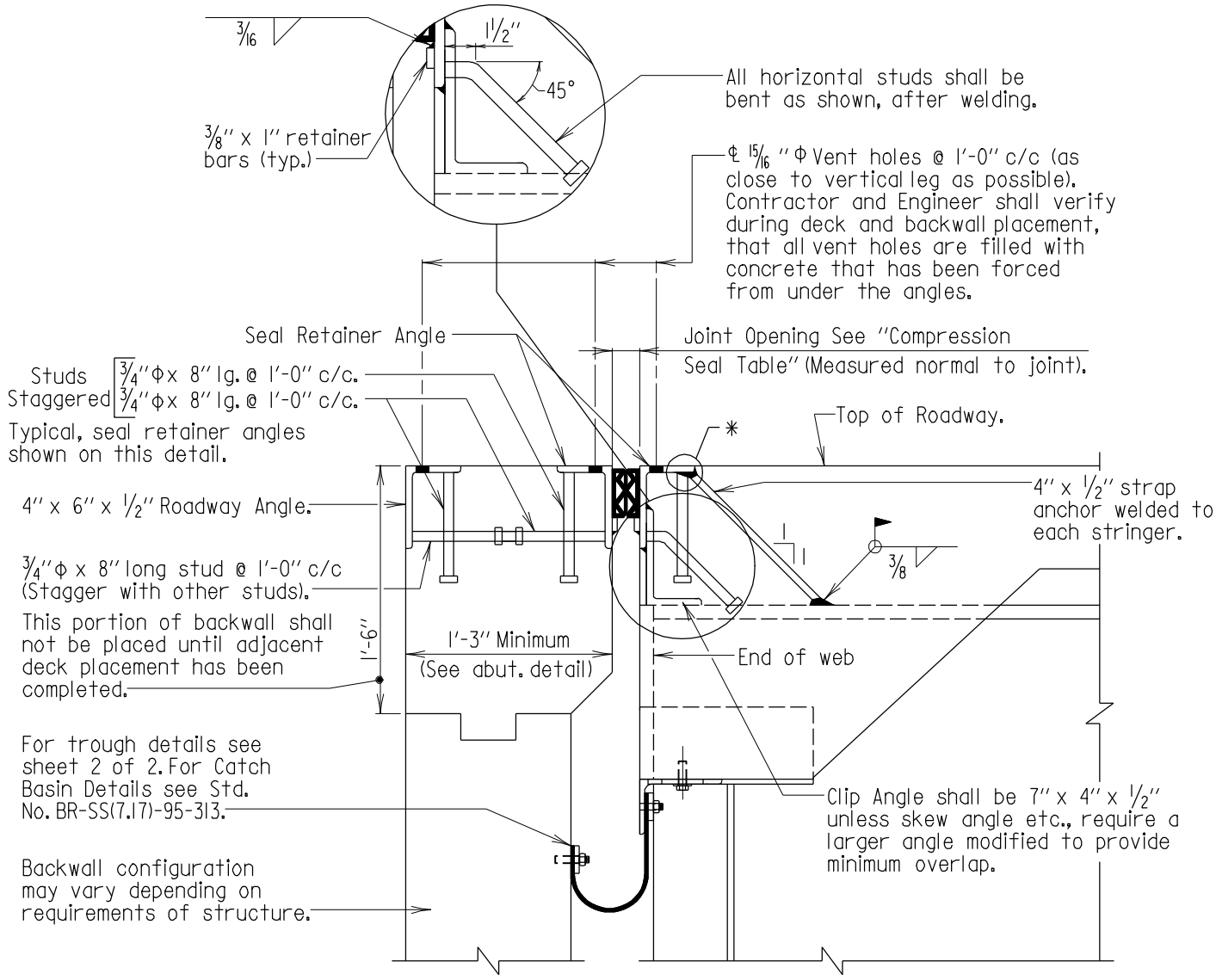

* After all welding of anchor straps is complete, Contractor shall thoroughly clean all damaged areas. All areas that will be exposed shall be recoated to the satisfaction of the Engineer.

SECTION
Scale: 1" = 1'-0"

Notes:
1. New bridge details shown.
2. See Standard No. BR-SS(8.06)-78-72 showing special attachment of new clip angle.
3. Compression seal to be placed in one continuous piece. after joint angles are set, and deck and entire backwall are in place.
4. See Standard No. BR-SS(7.01)-77-63 and BR-SS(8.02)-75-4 for additional details.
5. Ship and erect seal retaining angles as a unit.

APPROVAL
R.S. Freedman DIRECTOR OFFICE OF BRIDGE DEVEL.
DATE: 12/12/79

REVISIONS	
SHA	FHWA
9-17-98	·
1-7-02	·
11-18-04	·
7-19-06	·

FHWA APPROVAL
DATE: 4-4-80

STATE OF MARYLAND
DEPARTMENT OF TRANSPORTATION
STATE HIGHWAY ADMINISTRATION
OFFICE OF BRIDGE DEVELOPMENT

COMPRESSION SEAL ROADWAY JOINTS AT ABUTMENTS

STANDARD NO. BR-SS(7.02)-79-64 SHEET 1 OF 2

SUPER-ROADWAY JOINTS

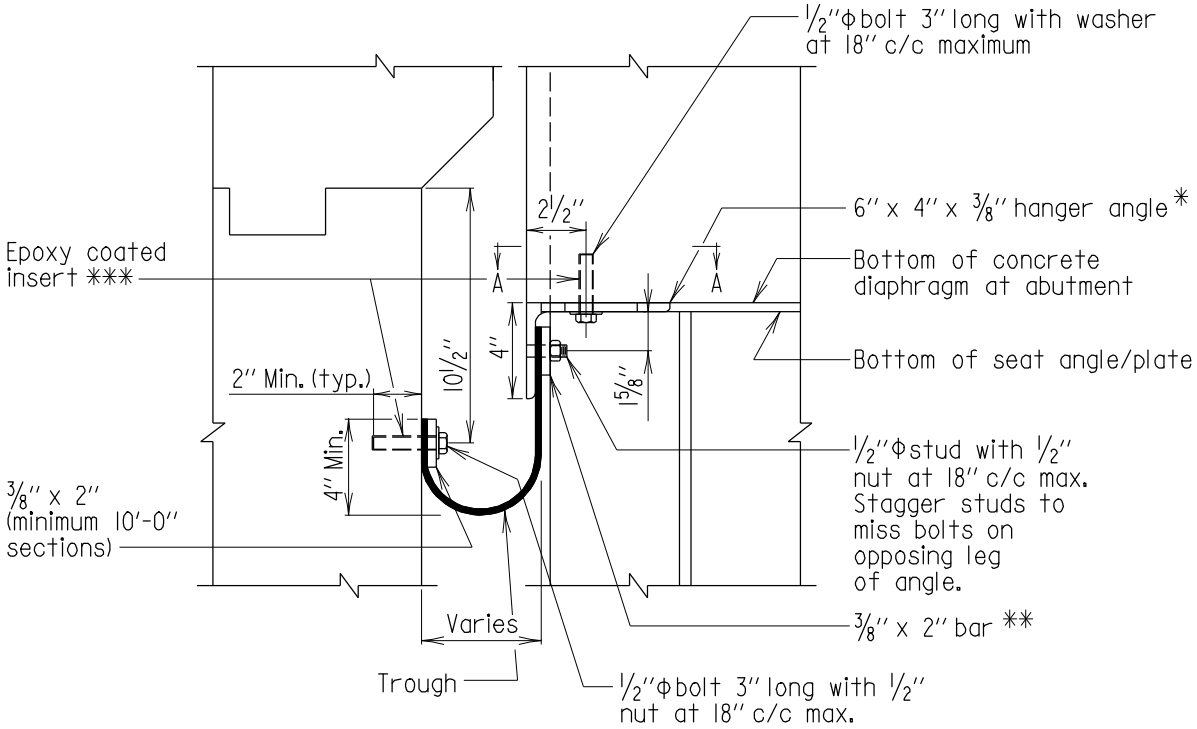

* 6"x4"x 3/8" hanger angle extends from seat angle/plate to seat angle/plate of adjacent stringer. Extend vertical leg of angle beyond exterior stringer to support trough. See Section A-A.

** Bar discontinuous at stringer web. See Section A-A.

*** At the Contractor's option drilled anchor inserts or cast-in-place studs may be used. No additional compensation will be allowed for either of these options.

SECTION

Scale: 1 1/2" = 1'-0"

After trough is in place move 6" x 4" hanger angles back to tighten trough against stringer web.

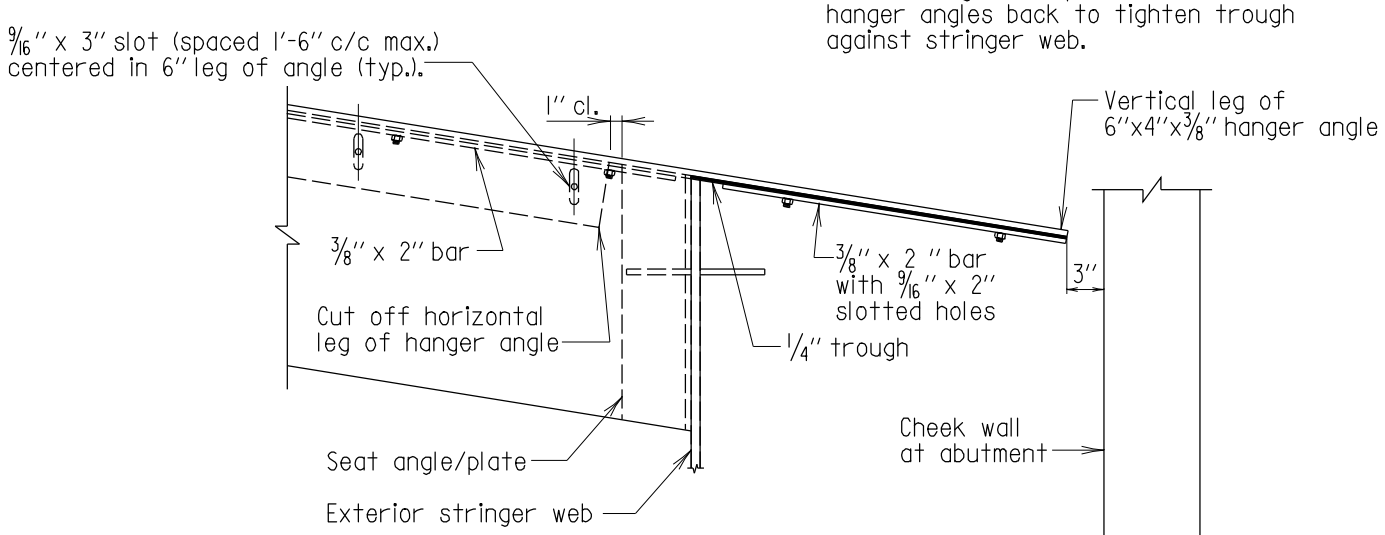

SECTION A-A

Scale: 3/4" = 1'-0"

Notes:

1. All angles and bar plates shall be unpainted ASTM A 709 Grade 36 galvanized steel. At the Contractor's option, fiberglass conforming to 921.11 may be substituted for the steel hanger angle. No additional compensation will be allowed for this option.
2. All bolts, studs, and nuts shall be unpainted ASTM A 709 Grade 36 galvanized steel.
3. Trough material shall conform to 911.11.
4. Holes in trough material shall be drilled in the field.

APPROVAL
R.S. Freedman DIRECTOR OFFICE OF BRIDGE DEVEL.
DATE: 11/14/95

REVISIONS	
SHA	FHWA
8-7-98	·
2-14-00	·
1-22-01	·
1-18-05	·

FHWA APPROVAL
DATE: .

STATE OF MARYLAND
DEPARTMENT OF TRANSPORTATION
STATE HIGHWAY ADMINISTRATION
OFFICE OF BRIDGE DEVELOPMENT

NEOPRENE TROUGH DETAILS
FOR COMPRESSION SEAL ROADWAY JOINTS
AT ABUTMENTS

STANDARD NO. BR-SS(7.02)-79-64 SHEET 2 OF 2

SUPER-ROADWAY JOINTS

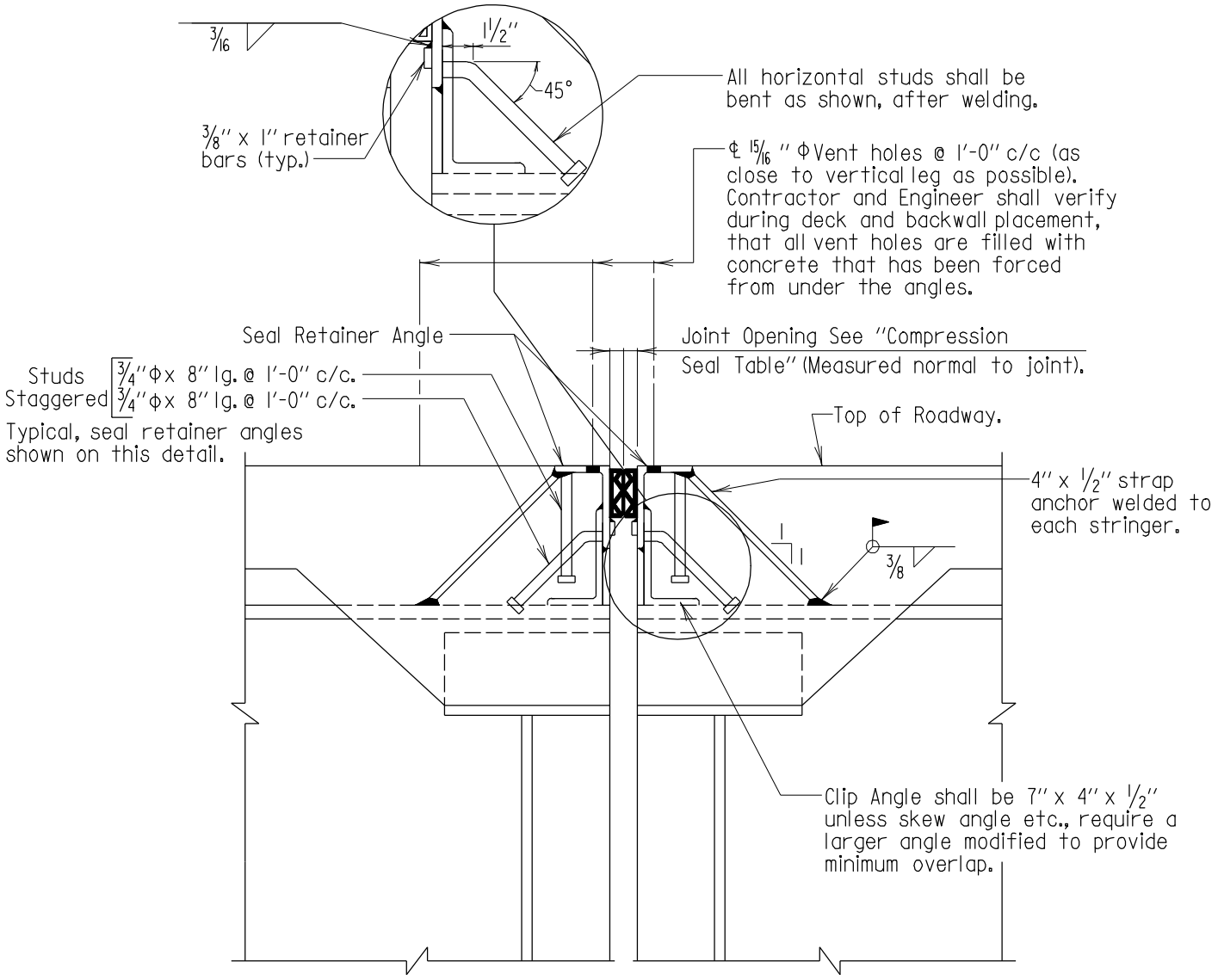

SECTION

Scale: 1" = 1'-0"

Notes:

1. New bridge details shown.
2. See Standard No. BR-SS(8.06)-78-72 showing special attachment of new clip angle.
3. Compression seal to be placed after joint angles are set, and deck is placed.
4. See Standard No. BR-SS(7.01)-77-63 and BR-SS(8.02)-75-4 for additional details.
5. Ship and erect seal retaining angles as a unit.

APPROVAL	
E.S. Freedman DIRECTOR OFFICE OF BRIDGE DEVEL.	
DATE: 12/12/79	
REVISIONS	
SHA	FHWA
9-24-96	·
11-17-97	·
1-7-02	·
7-19-06	·

FHWA APPROVAL
DATE: 4-4-80

STATE OF MARYLAND
DEPARTMENT OF TRANSPORTATION
STATE HIGHWAY ADMINISTRATION
OFFICE OF BRIDGE DEVELOPMENT

COMPRESSION SEAL ROADWAY JOINTS AT PIERS

STANDARD NO. BR-SS(7.03)-79-65 SHEET 1 OF 1

SUPER-ROADWAY JOINTS

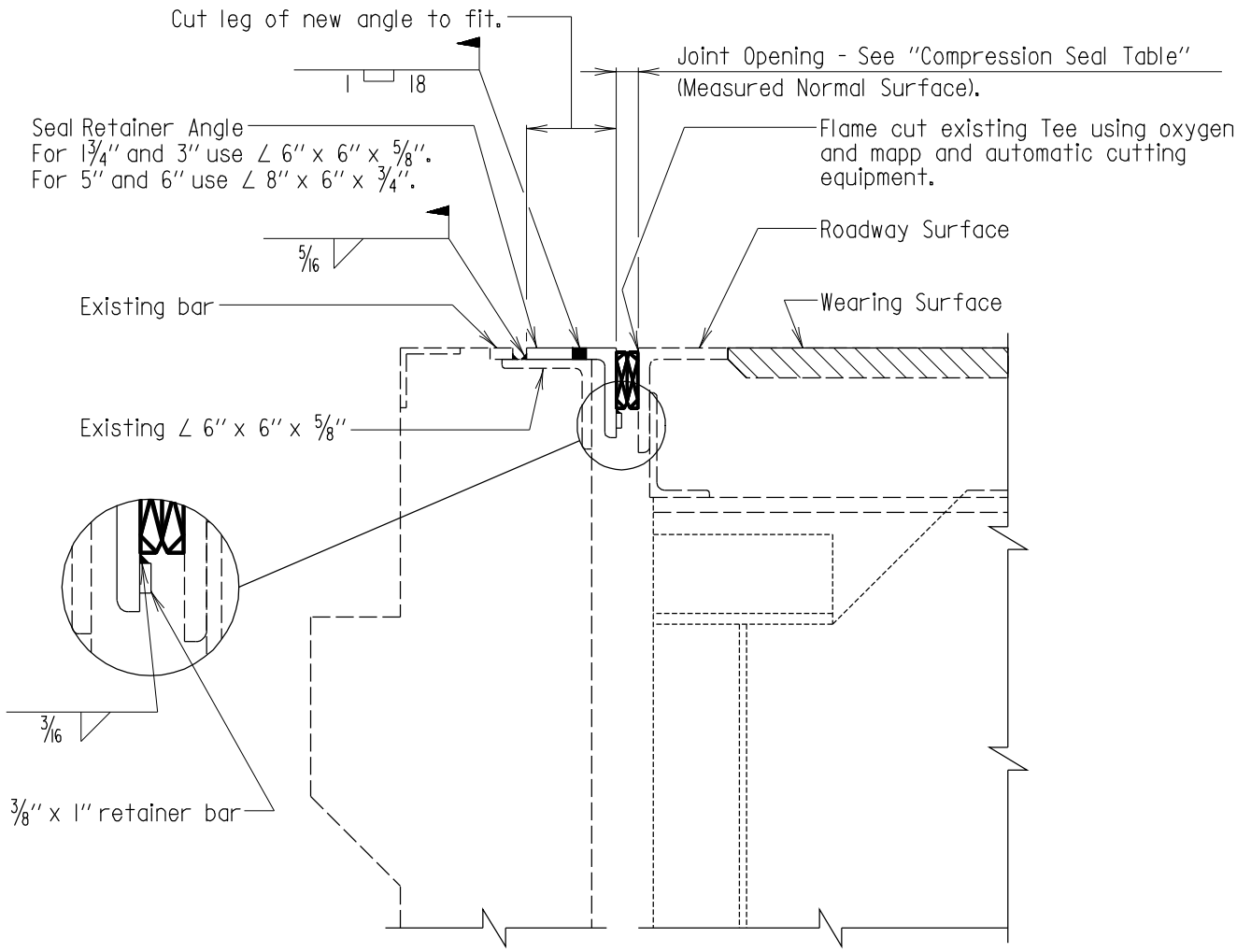

SECTION
Scale: 1"=1'-0"

COMPRESSION SEAL TABLE							
Location	Uncompressed Seal Width	Joint Opening @					
		40°F	50°F	60°F	70°F	80°F	90°F
·	1¾"	·	·	1⅛"	·	·	·
·	3"	·	·	1 15/16 "	·	·	·
·	5"	·	·	3"	·	·	·
·	6"	·	·	3⅝"	·	·	·
·	·	·	·	·	·	·	·

Note:
1. Existing Structure shown dashed.
2. Existing anchorage system for joint not shown.
3. Existing slabs to remain.
4. The 1¾ and 3 in. seals to be one piece for full length of seal (no joints).
5. The 5 and 6 in. seals may have one shop splice per joint, if the length of joint exceeds 50 ft. Splice shall be at least 15 ft. from gutter line.
6. Location of holes for plug welds to be verified in field.

APPROVAL	
R.S. Freedman DIRECTOR OFFICE OF BRIDGE DEVEL.	
DATE: 1/6/78	
REVISIONS	
SHA	FHWA
9-24-96	·
11-17-97	·
7-26-01	·
1-7-02	·
FHWA APPROVAL	
DATE: 1-31-78	

STATE OF MARYLAND
DEPARTMENT OF TRANSPORTATION
STATE HIGHWAY ADMINISTRATION
OFFICE OF BRIDGE DEVELOPMENT

MODIFIED EXISTING BRIDGE DECK
EXPANSION JOINT AT ABUTMENTS

STANDARD NO. BR-SS(7.04)-77-66 SHEET 1 OF 1

SUPER-ROADWAY JOINTS

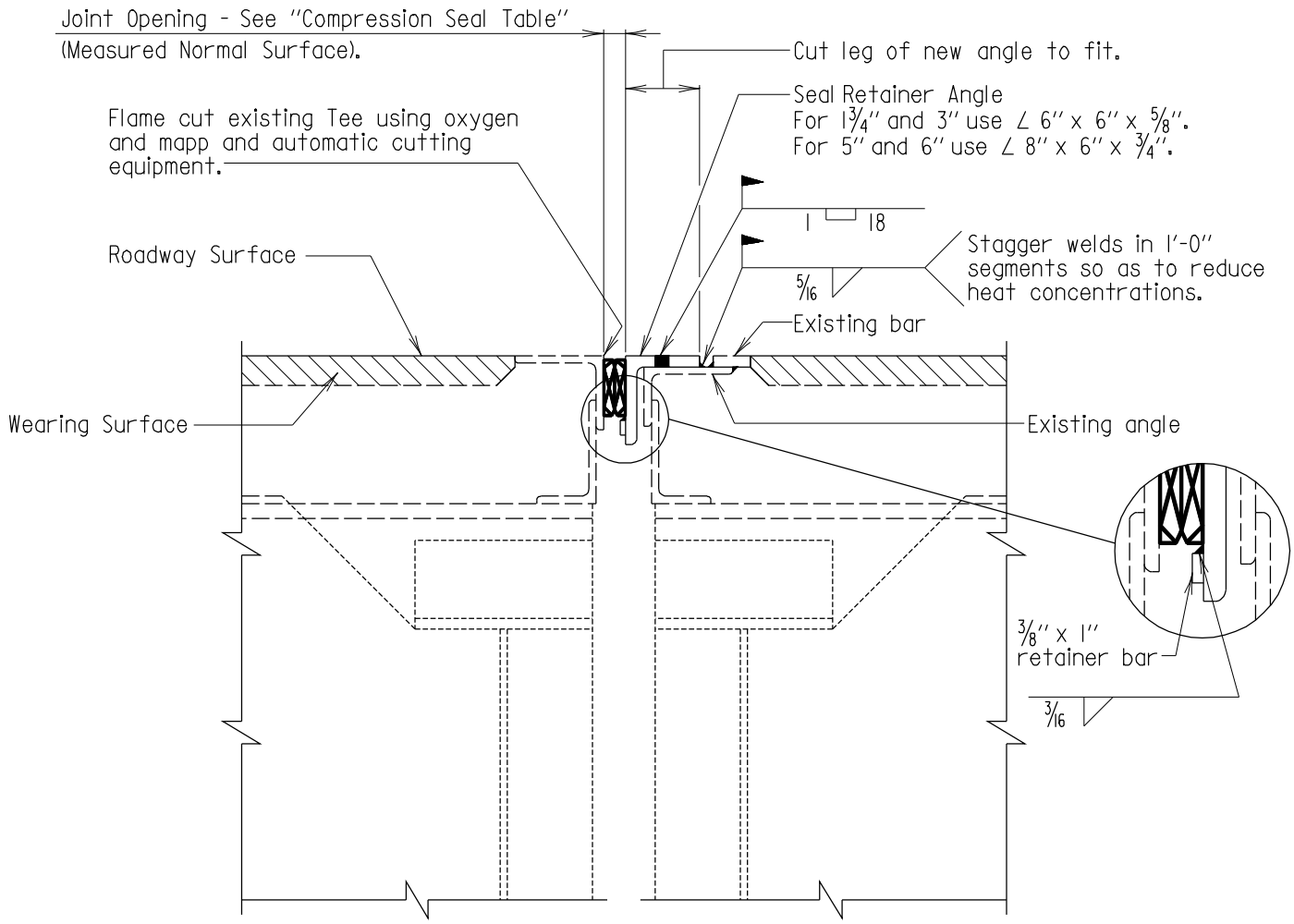

SECTION
Scale: 1"=1'-0"

COMPRESSION SEAL TABLE							
Location	Uncompressed Seal Width	Joint Opening @					
		40°F	50°F	60°F	70°F	80°F	90°F
·	1¾"	·	·	1⅛"	·	·	·
·	3"	·	·	1 15/16"	·	·	·
·	5"	·	·	3"	·	·	·
·	6"	·	·	3⅝"	·	·	·
·	·	·	·	·	·	·	·

Note:
1. Existing Structure shown dashed.
2. Existing anchorage system for joint not shown.
3. Existing slabs to remain.
4. The 1¾" and 3" seals to be one piece for full length of seal (no joints).
5. The 5" and 6" seals may have one shop splice per joint, if the length of joint exceeds 50'. Splice shall be at least 15' from gutter line.

APPROVAL	
E.S. Freedman DIRECTOR OFFICE OF BRIDGE DEVEL.	
DATE: 1/6/78	
REVISIONS	
SHA	FHWA
9-24-96	·
11-17-97	·
7-26-01	·
1-7-02	·
FHWA APPROVAL	
DATE: 1-31-78	

STATE OF MARYLAND
DEPARTMENT OF TRANSPORTATION
STATE HIGHWAY ADMINISTRATION
OFFICE OF BRIDGE DEVELOPMENT

MODIFIED EXISTING BRIDGE DECK
EXPANSION JOINT AT PIERS

STANDARD NO. BR-SS(7.05)-77-67 SHEET 1 OF 1

SUPER-ROADWAY JOINTS

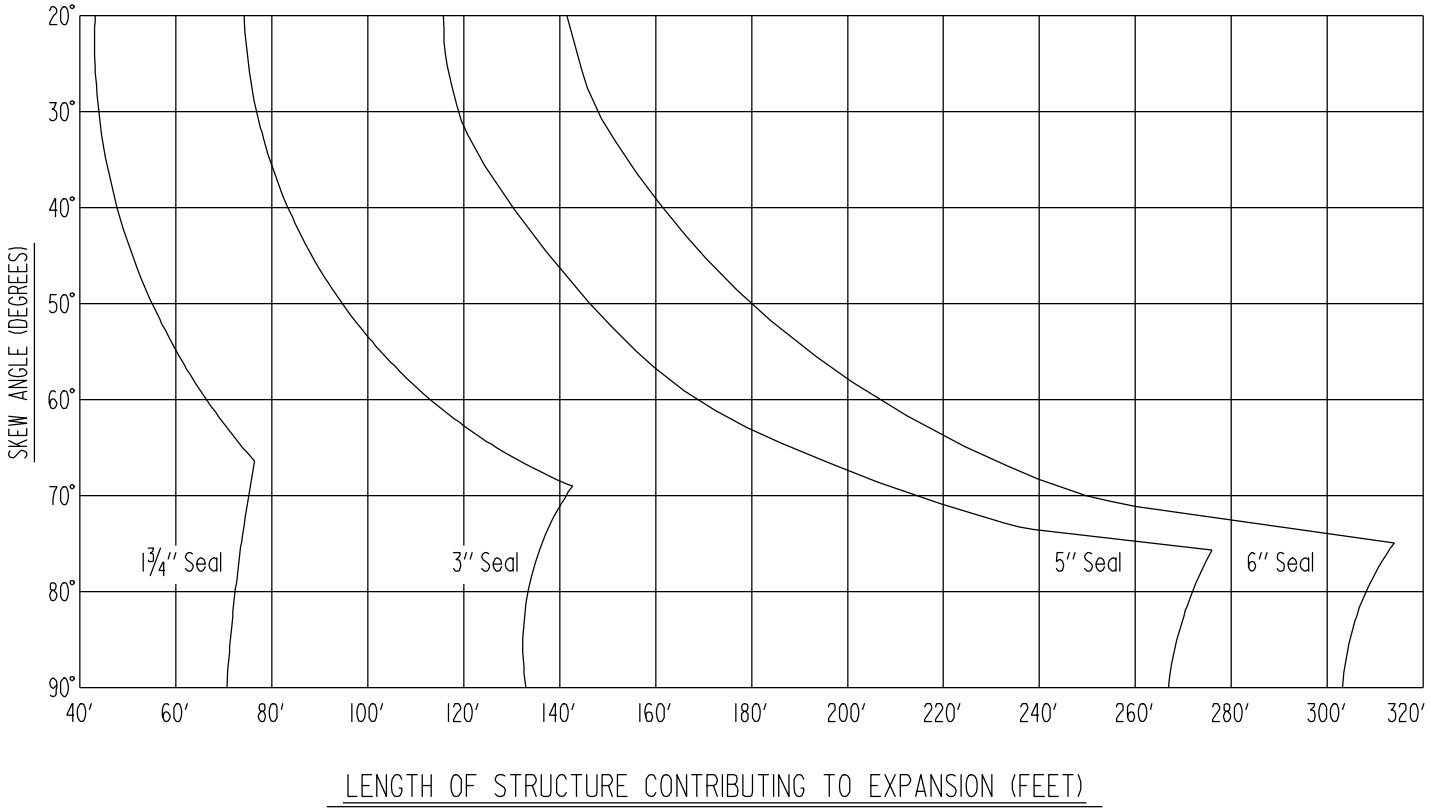

PREFORMED COMPRESSION SEALS		
Seal Width	Total Allow Movement	Joint Opening @ 60°F
1¾"	0.66"	1⅛"
3"	1.25"	1 15/16"
5"	2.50"	3"
6"	2.85"	3⅝"

Note:
Seal opening at 60°F based on a temperature variation of 0°F to 120°F.

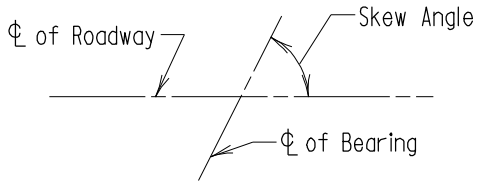

SKEW ANGLE
Scale: None

FOR OFFICE USE ONLY

APPROVAL	
E.S. Freedman DIRECTOR OFFICE OF BRIDGE DEVEL.	
DATE: 4/12/78	
REVISIONS	
SHA	FHWA
10-1-82	11-29-85
·	·
·	·
·	·

FHWA APPROVAL
DATE: 10-17-78

STATE OF MARYLAND
DEPARTMENT OF TRANSPORTATION
STATE HIGHWAY ADMINISTRATION
OFFICE OF BRIDGE DEVELOPMENT

PREFORMED COMPRESSION SEAL SELECTION CHART

STANDARD NO. BR-SS(7.06)-78-71 SHEET 1 OF 1

SUPER - ROADWAY JOINTS

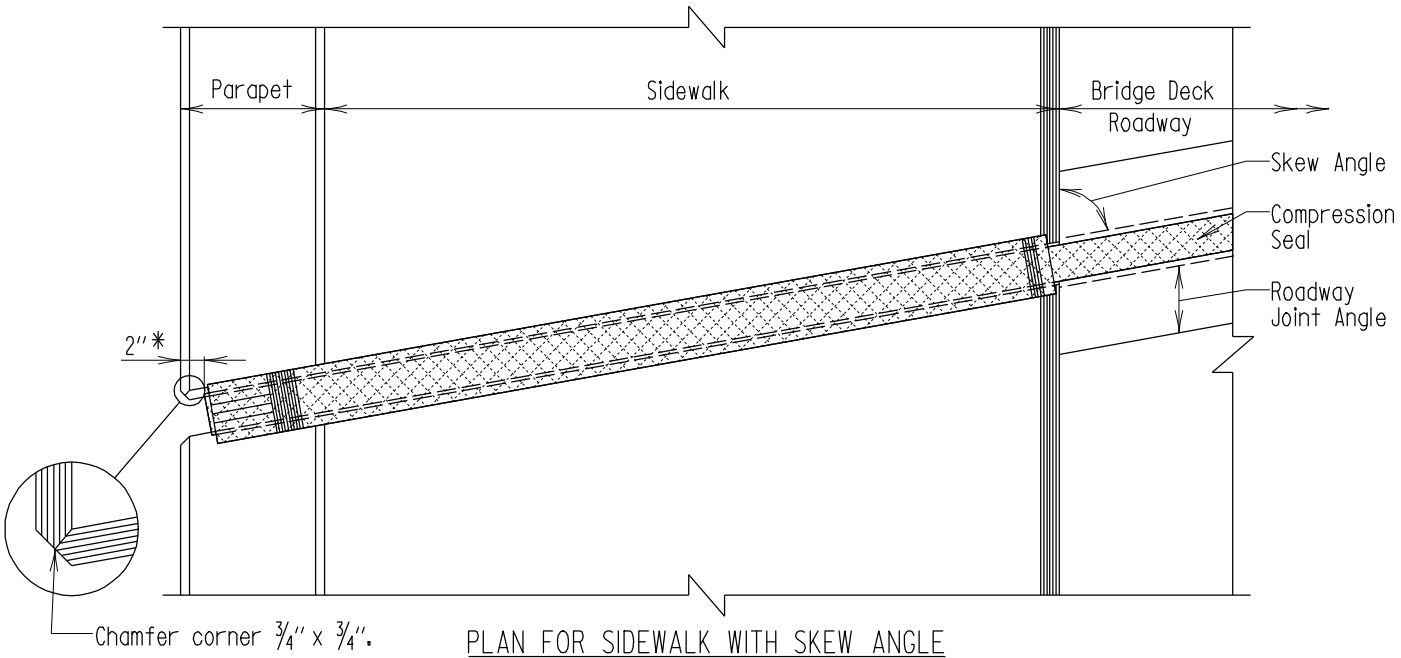

PLAN FOR SIDEWALK WITH SKEW ANGLE
70° OR GREATER
Scale: ¾″ = 1′-0″

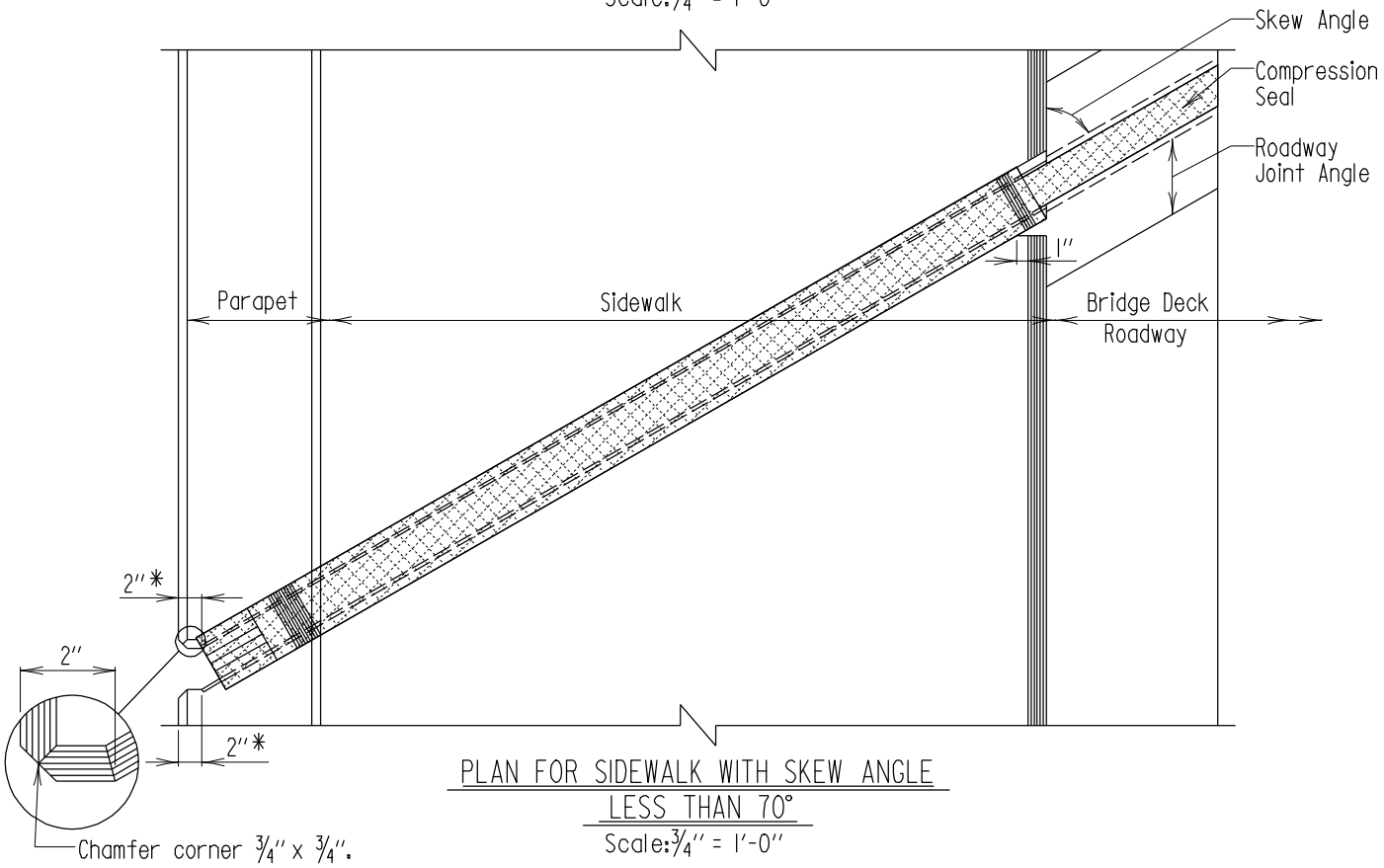

PLAN FOR SIDEWALK WITH SKEW ANGLE
LESS THAN 70°
Scale: ¾″ = 1′-0″

* Dimension measured at top of parapet.

APPROVAL	
E. S. Freedman DIRECTOR OFFICE OF BRIDGE DEVEL. DATE: 11/15/79	
REVISIONS	
SHA	FHWA
6-20-84	11-8-84
10-30-87	12-1-87
·	·
·	·

FHWA APPROVAL
DATE: 4-4-80

STATE OF MARYLAND
DEPARTMENT OF TRANSPORTATION
STATE HIGHWAY ADMINISTRATION
OFFICE OF BRIDGE DEVELOPMENT

FULL HEIGHT COMPRESSION
SEAL ROADWAY JOINT AT SIDEWALKS

STANDARD NO. BR-SS(7.07)-79-96 SHEET 1 OF 2

SUPER-ROADWAY JOINTS

Note:
Sidewalk configuration varies - see Typical Section.

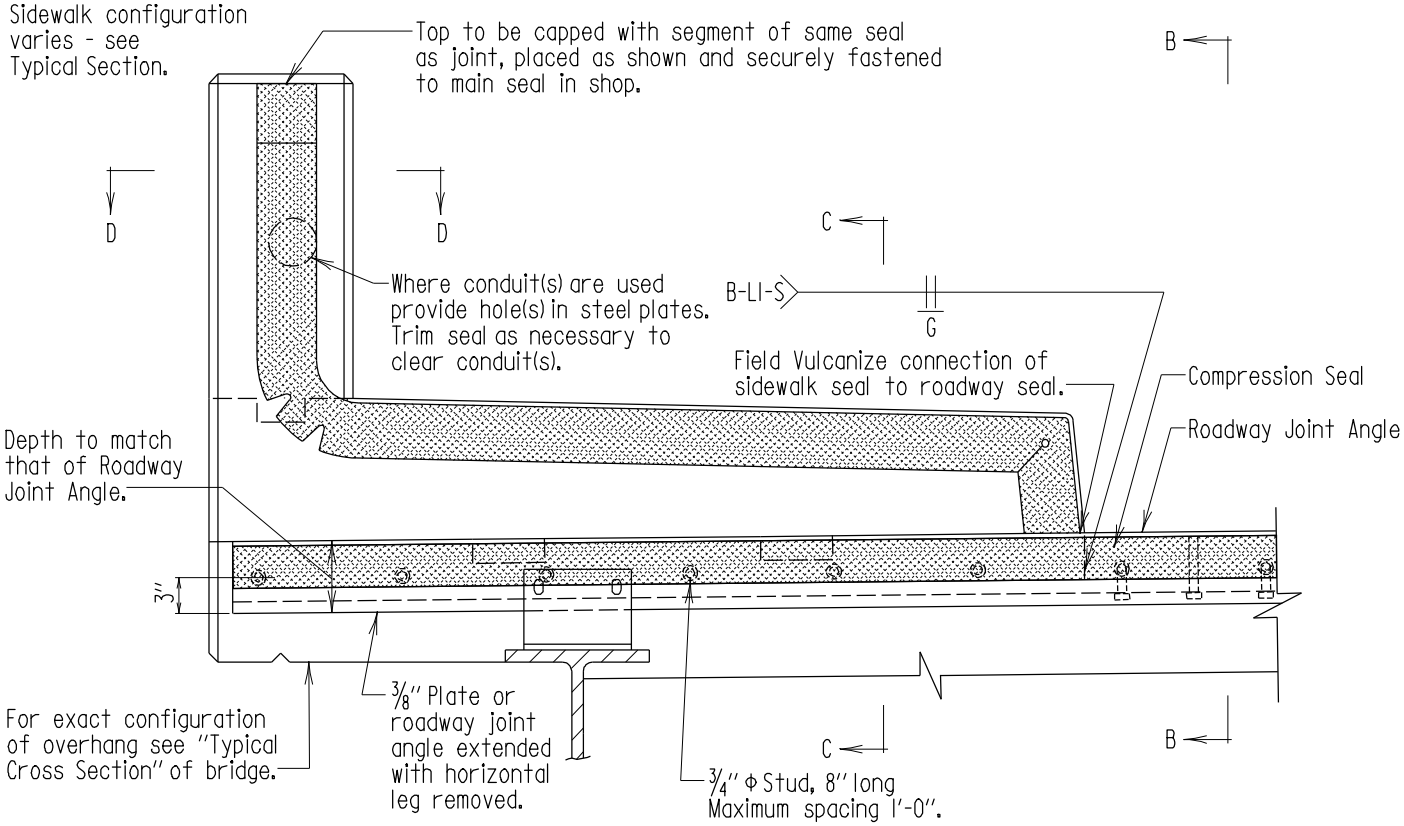

ELEVATION - SECTION A-A

Scale: 3/4" = 1'-0"

Roadway Seal Size	1 3/4"	3"	5"	6"
Sidewalk Seal Size	3"	5"	6"	6"*

* For this width, the sidewalk seal shall be the same size as the roadway seal. Sections C-C and D-D shall be modified to eliminate the 3/8" lip both sides and provide a 1/4" lip one side of the joint.

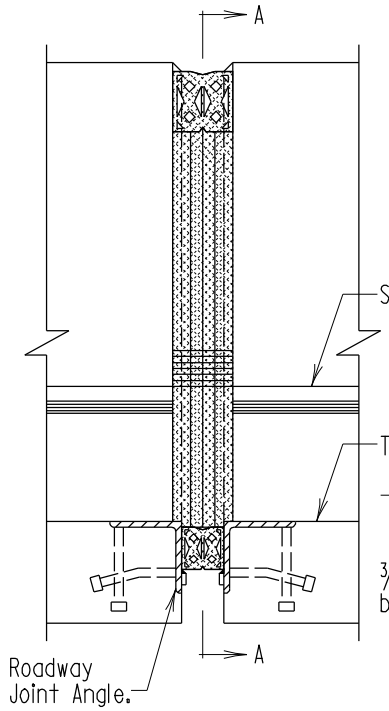

SECTION B-B

Scale: 3/4" = 1'-0"

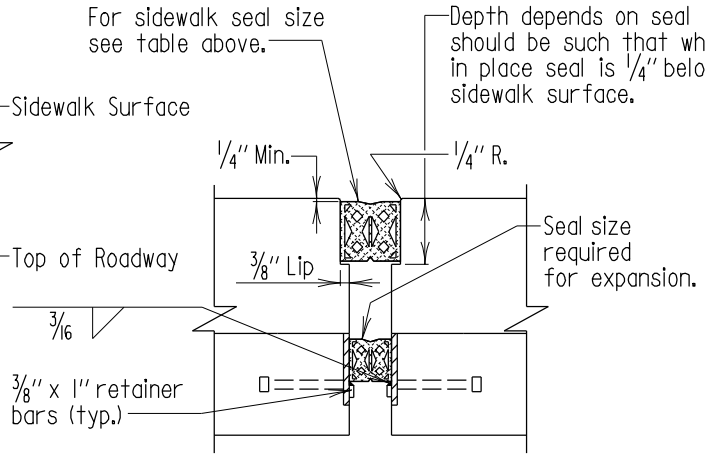

SECTION C-C

Scale: 3/4" = 1'-0"

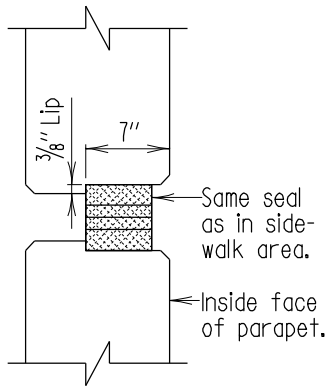

SECTION D-D

Scale: 3/4" = 1'-0"

Note:
1. All sections shown for 90° skew.
2. All steel to be A.S.T.M. A 709, Grade 36 for painting specifications see Section 460.
3. Joint area to be thoroughly cleaned just prior to placing of seal.

APPROVAL
R. S. Freedman DIRECTOR OFFICE OF BRIDGE DEVEL.
DATE: 11/15/79

REVISIONS	
SHA	FHWA
3-20-01	·
5-24-01	·
7-24-01	·
1-7-02	·

FHWA APPROVAL
DATE: 4-4-80

STATE OF MARYLAND
DEPARTMENT OF TRANSPORTATION
STATE HIGHWAY ADMINISTRATION
OFFICE OF BRIDGE DEVELOPMENT

FULL HEIGHT COMPRESSION
SEAL ROADWAY JOINT AT SIDEWALKS

STANDARD NO. BR-SS(7.07)-79-96 SHEET 2 OF 2

SUPER-ROADWAY JOINTS

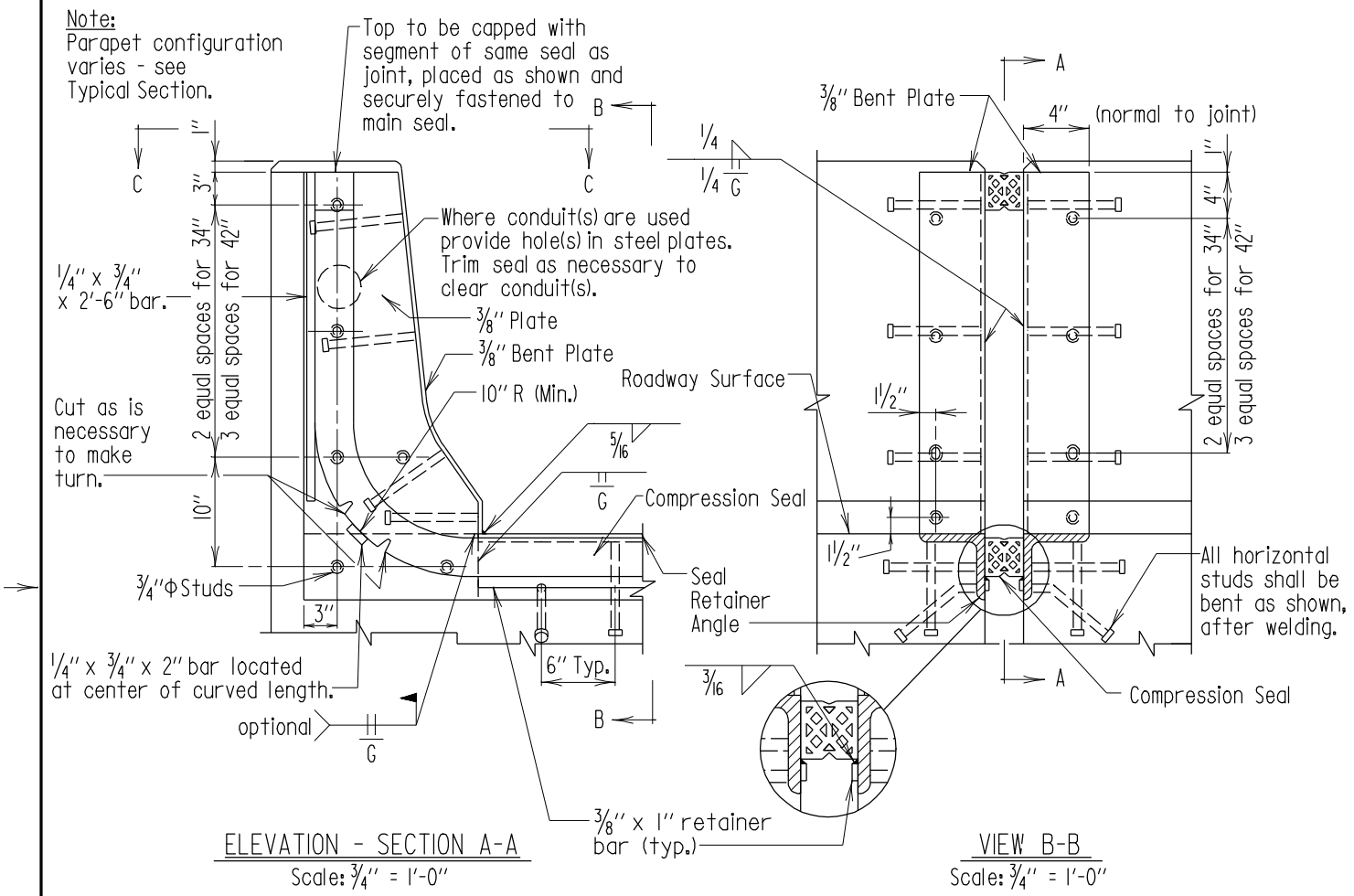

ELEVATION - SECTION A-A

Scale: 3/4" = 1'-0"

VIEW B-B

Scale: 3/4" = 1'-0"

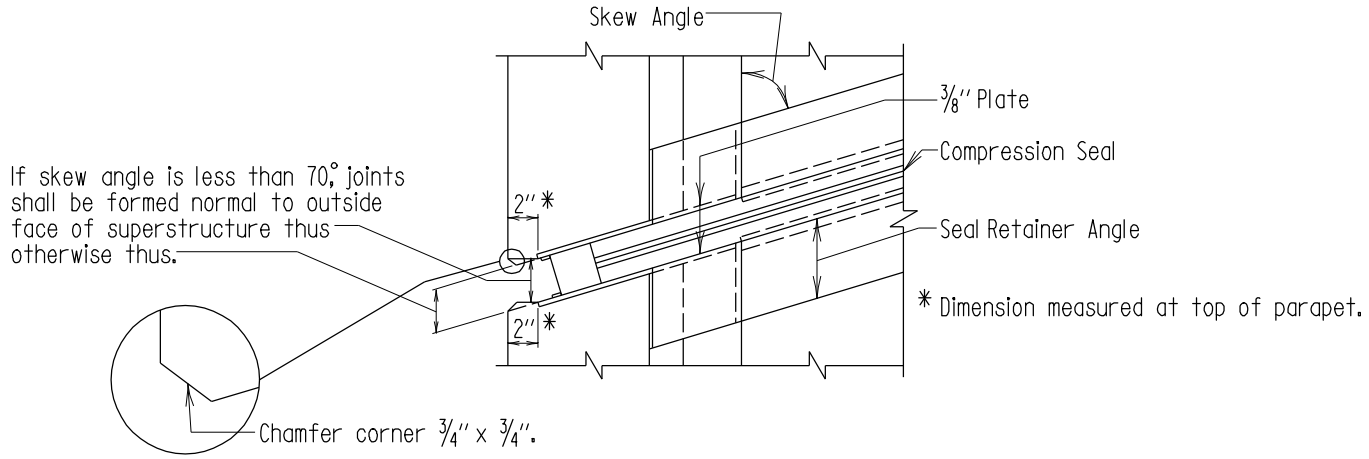

VIEW C-C

Scale: 3/4" = 1'-0"

34'' OR 42'' PARAPET

Note:
1. 34" F-shape parapet shown. 42" F-shape parapet similar with differneces as noted.
2. All studs shall 3/4"Φ-8" long
3. Section A-A & B-B shown 90° skew.
4. All material to be ASTM A 709 Grade 36.

APPROVAL	
E.S. Freedman DIRECTOR OFFICE OF BRIDGE DEVEL. DATE: 12/12/79	
REVISIONS	
SHA	FHWA
7-24-01	·
1-7-02	·
10-22-03	·
4-27-04	·

FHWA APPROVAL	
DATE: 4-4-80	

STATE OF MARYLAND
DEPARTMENT OF TRANSPORTATION
STATE HIGHWAY ADMINISTRATION
OFFICE OF BRIDGE DEVELOPMENT

FULL HEIGHT COMPRESSION SEAL ROADWAY JOINT FOR 34" OR 42" F-SHAPE PARAPET

STANDARD NO. BR-SS(7.08)-03-97 SHEET 1 OF 1

SUPER - ROADWAY JOINTS

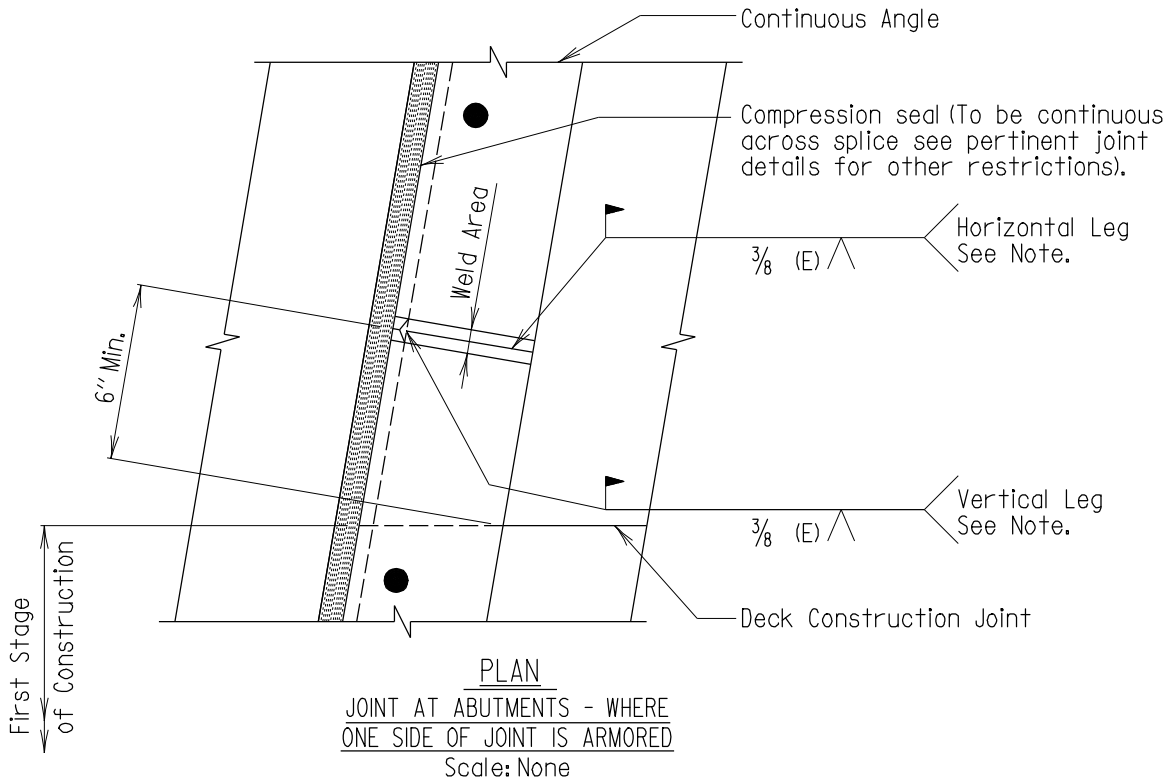

PLAN

JOINT AT ABUTMENTS - WHERE ONE SIDE OF JOINT IS ARMORED

Scale: None

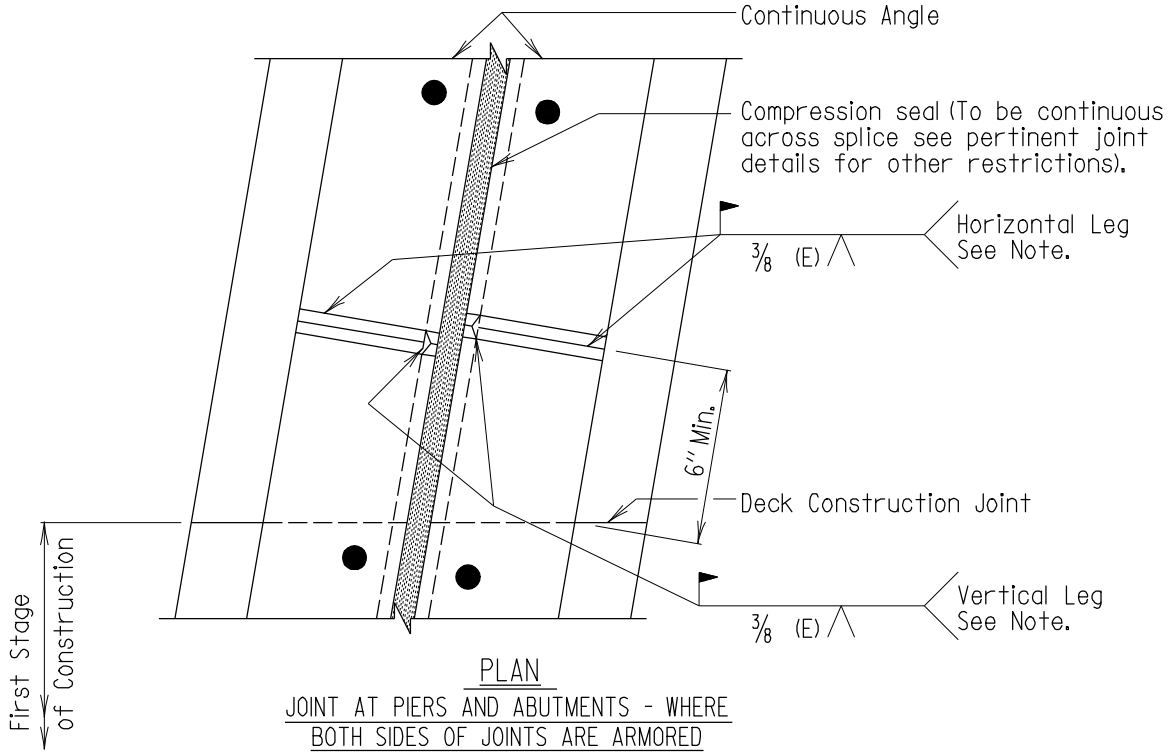

PLAN

JOINT AT PIERS AND ABUTMENTS - WHERE BOTH SIDES OF JOINTS ARE ARMORED

Scale: None

Notes:
The minimum effective throat (E) shall be determined by the angle thickness as follows:
Min. E = 3/16" for thicknesses over 1/4" to 1/2" incl.
Min. E = 1/4" for thicknesses over 1/2" to 3/4" incl.

APPROVAL	
R.S. Freedman DIRECTOR OFFICE OF BRIDGE DEVEL.	
DATE: 7/28/80	
REVISIONS	
SHA	FHWA
9-9-82	6-27-83
6-28-84	11-8-84
4-10-86	6-8-90
9-3-86	6-8-90

FHWA APPROVAL
DATE: 10-3-80

STATE OF MARYLAND
DEPARTMENT OF TRANSPORTATION
STATE HIGHWAY ADMINISTRATION
OFFICE OF BRIDGE DEVELOPMENT

ROADWAY JOINT SPLICES FOR SEQUENTIAL CONSTRUCTION

STANDARD NO. BR-SS(7.09)-80-113 SHEET 1 OF 1

SUPER-ROADWAY JOINTS

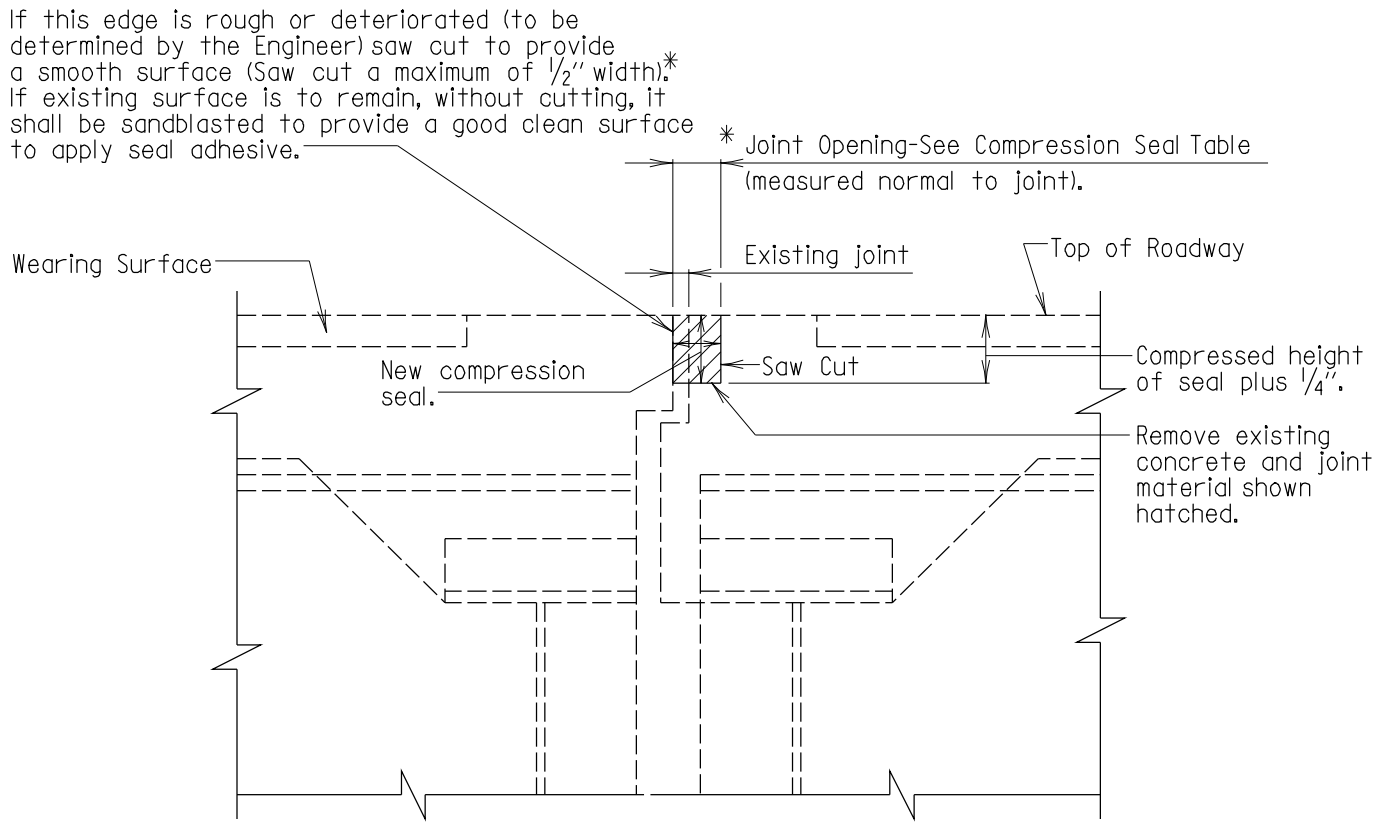

* Prior to ordering joint material each joint shall be evaluated to determine width of saw cutting required. If at 60° F or below the joint opening is 2" or less (measured perpendicular to ℄ of joint) the 3" seal may be used. For openings greater than above, contact Office of Bridge Development. If the larger seal is required, the Contractor will be paid the differential in cost of material between the two seals being compared.

SECTION

Scale: 1" = 1'-0"

COMPRESSION SEAL TABLE

Location	Uncompressed Seal Width	Joint Opening @						Movement Rating
		40°F	50°F	60°F	70°F	80°F	90°F	
·	1 3/4"	·	·	1 1/8"	·	·	·	0.66"
·	3"	·	·	1 15/16"	·	·	·	1.25"
·	5"	·	·	3"	·	·	·	2.50"
·	6"	·	·	3 5/8"	·	·	·	2.85"
·	·	·	·	·	·	·	·	·

Note:
1. Existing Structure shown dashed.
2. Existing slab to remain.
3. The 1 3/4" and 3" seals to be one piece for full length of seal (no joints).
4. The 5" and 6" seals may have one shop splice per joint, if the length of joint exceeds 50'. Splice shall be at least 15' from gutter line.
5. Joint area shall be thoroughly cleaned just prior to placing seal.

APPROVAL
E.S. Freedman DIRECTOR OFFICE OF BRIDGE DEVEL.
DATE: 11/14/80

REVISIONS	
SHA	FHWA
10-27-92	·
6-4-93	·
2-11-97	·
11-17-97	·

FHWA APPROVAL
DATE: 3-16-81

STATE OF MARYLAND
DEPARTMENT OF TRANSPORTATION
STATE HIGHWAY ADMINISTRATION
OFFICE OF BRIDGE DEVELOPMENT

MODIFIED EXISTING BRIDGE DECK
NON-ARMORED EXPANSION JOINT AT PIERS

STANDARD NO. BR-SS(7.10)-80-116 SHEET 1 OF 1

SUPER-ROADWAY JOINTS

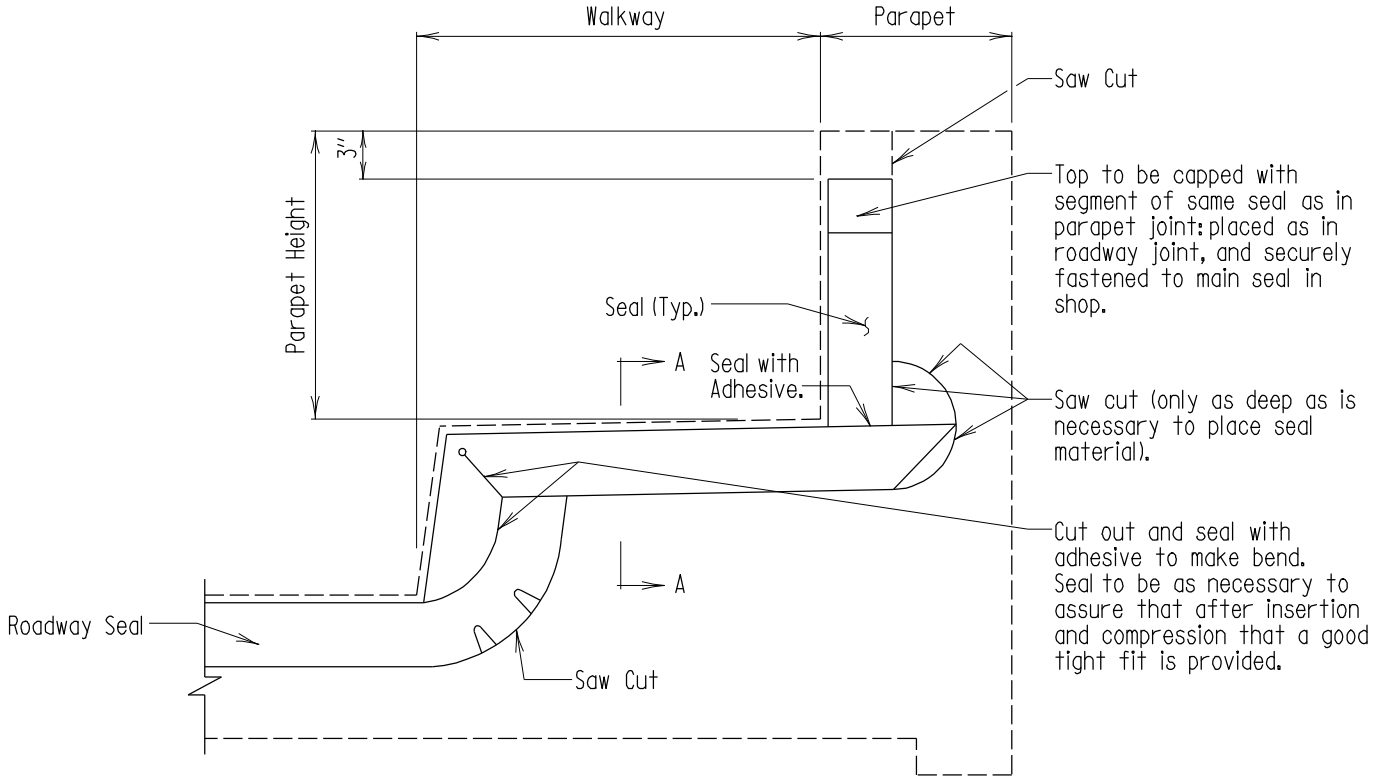

SECTION

Scale: 1" = 1'-0"

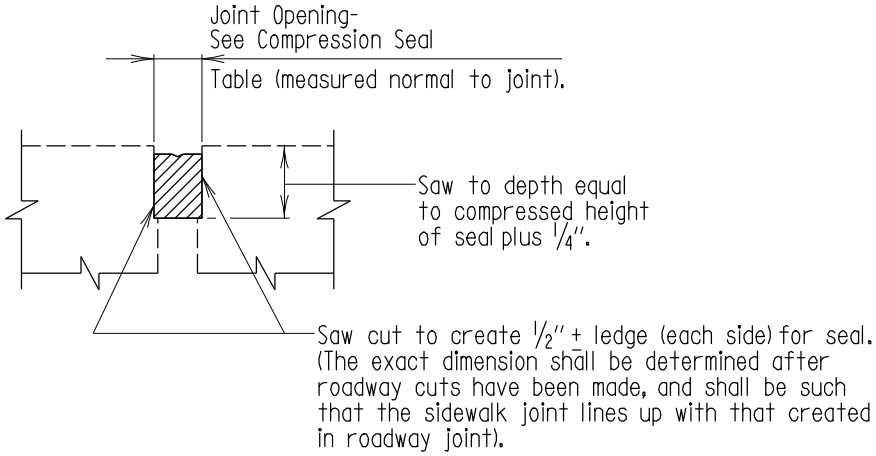

SECTION A-A

Scale: 1" = 1'-0"

Note:
1. Existing structure shown dashed.
2. Existing slab to remain.
3. All gutter line splices of seal, if possible, shall be shop fabricated. All others may be field splices.
4. Joint area shall be thoroughly cleaned just prior to placing of seal.

APPROVAL	
R.S. Friedman DIRECTOR OFFICE OF BRIDGE DEVEL. DATE: 11/17/80	
REVISIONS	
SHA	FHWA
9-9-82	11-29-85

FHWA APPROVAL
DATE: 11-29-85

STATE OF MARYLAND
DEPARTMENT OF TRANSPORTATION
STATE HIGHWAY ADMINISTRATION
OFFICE OF BRIDGE DEVELOPMENT

MODIFIED EXISTING BRIDGE
NON-ARMORED JOINT AT WALKWAY

STANDARD NO. BR-SS(7.11)-80-117 SHEET 1 OF 1

SUPER-ROADWAY JOINTS

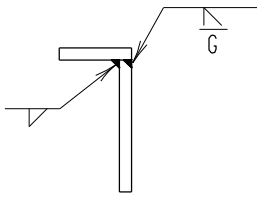

Minimum plate size, 3/8".

ALTERNATE TO WALKWAY ANGLE

Scale: None

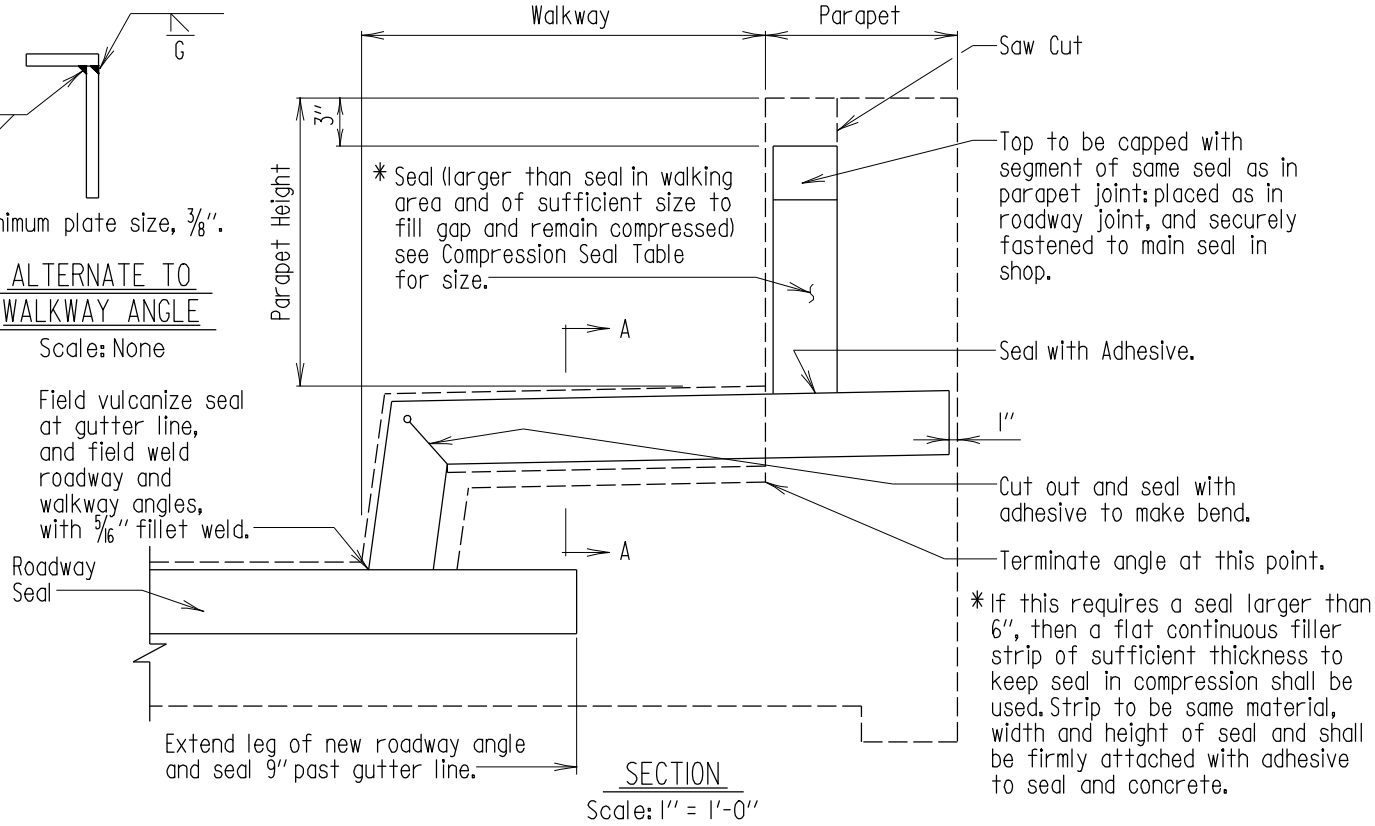

SECTION

Scale: 1" = 1'-0"

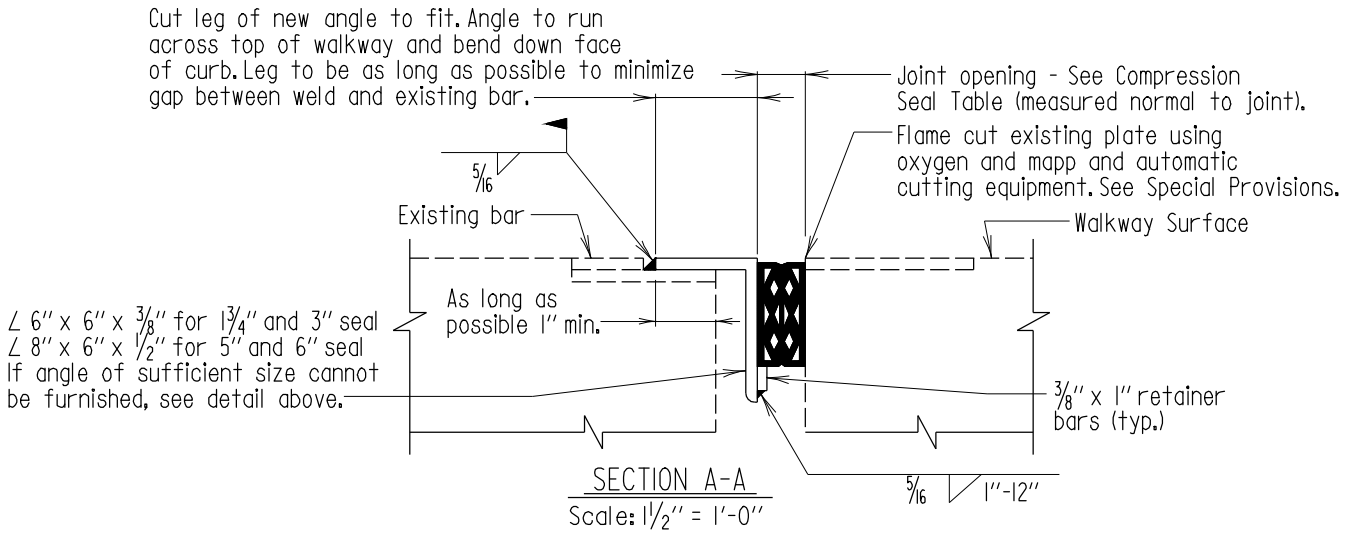

SECTION A-A

Scale: 1 1/2" = 1'-0"

COMPRESSION SEAL TABLE								
Location	Uncompressed Seal Width	Joint Opening @						Movement Rating
		40°F	50°F	60°F	70°F	80°F	90°F	
·	1 3/4"	·	·	1 1/8"	·	·	·	0.66"
·	3"	·	·	1 15/16"	·	·	·	1.25"
·	5"	·	·	3"	·	·	·	2.50"
·	6"	·	·	3 5/8"	·	·	·	2.85"
·	·	·	·	·	·	·	·	·

Note:
1. Existing structure shown dashed.
2. Existing anchorage system for joint, not shown.
3. Existing slab to remain.
4. All gutter line splices of seal, if possible, to be shop fabricated. All others may be field splices.
5. Joint area shall be thoroughly cleaned just prior to placing of seal.

APPROVAL	
E.S. Freedman DIRECTOR OFFICE OF BRIDGE DEVEL.	
DATE: 11/17/80	
REVISIONS	
SHA	FHWA
9-9-82	11-29-85
3-27-89	6-8-90
10-27-92	·
11-17-97	·

FHWA APPROVAL
DATE: 11-29-85

STATE OF MARYLAND
DEPARTMENT OF TRANSPORTATION
STATE HIGHWAY ADMINISTRATION
OFFICE OF BRIDGE DEVELOPMENT

MODIFIED EXISTING BRIDGE
ARMORED JOINT AT WALKWAY

STANDARD NO. BR-SS(7.12)-80-118 SHEET 1 OF 1

SUPER-ROADWAY JOINTS

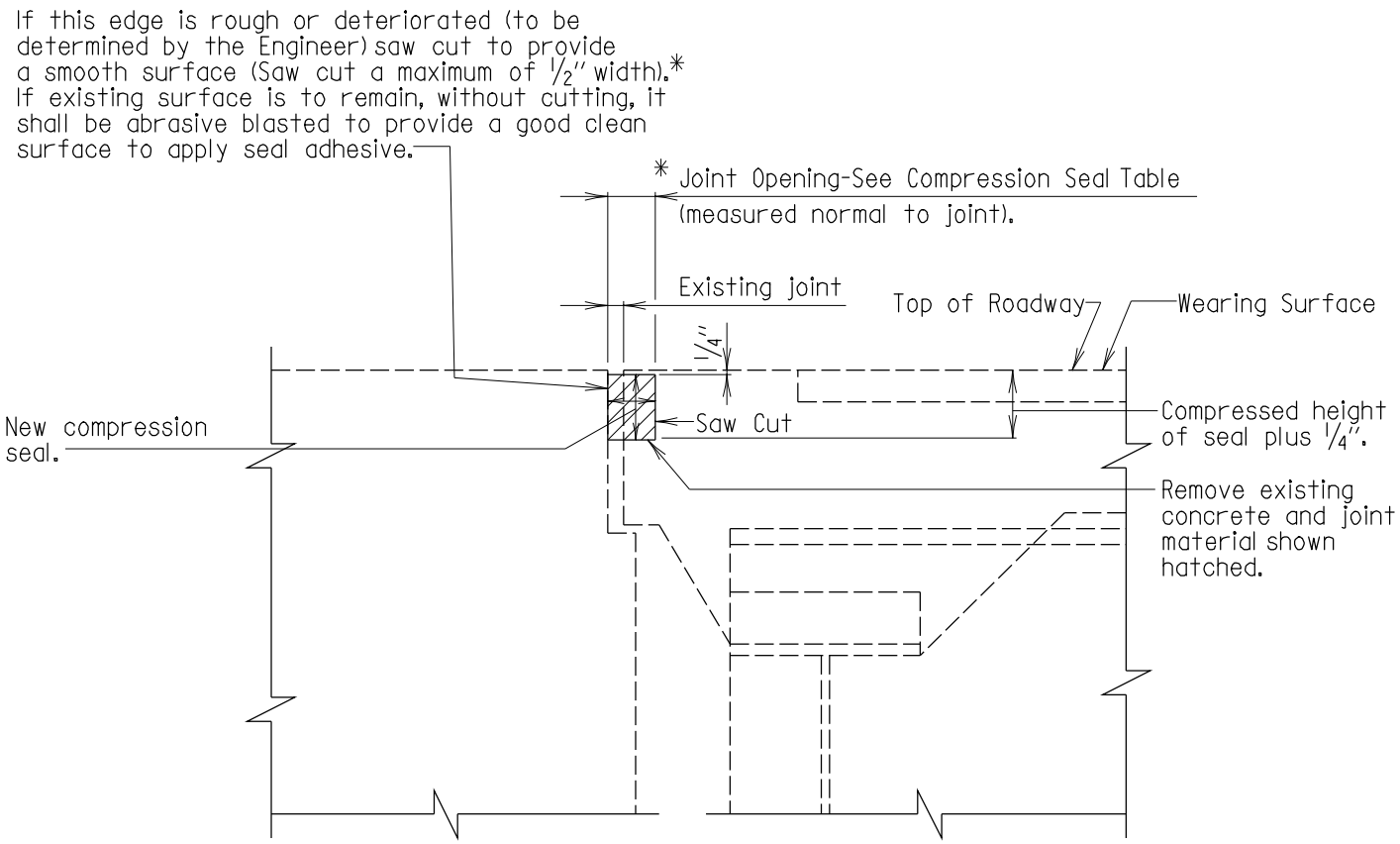

* Prior to ordering joint material each joint shall be evaluated to determine width of saw cutting required. If at 60° F or below the joint opening is 2" or less (measured perpendicular to ℄ of joint) the 3" seal may be used. For openings greater than above, contact Office of Bridge Development. If the larger seal is required, the Contractor will be paid the differential in cost of material between the two seals being compared.

SECTION

Scale: 1" = 1'-0"

COMPRESSION SEAL TABLE

Location	Uncompressed Seal Width	Joint Opening @						Movement Rating
		40°F	50°F	60°F	70°F	80°F	90°F	
·	1 3/4"	·	·	1 1/8"	·	·	·	0.66"
·	3"	·	·	1 15/16"	·	·	·	1.25"
·	5"	·	·	3"	·	·	·	2.50"
·	6"	·	·	3 5/8"	·	·	·	2.85"
·	·	·	·	·	·	·	·	·

Note:
1. Existing Structure shown dashed.
2. Existing slab to remain.
3. The 1 3/4" and 3" seals to be one piece for full length of seal (no joints).
4. The 5" and 6" seals may have one shop splice per joint, if the length of joint exceeds 50'. Splice shall be at least 15' from gutter line.
5. Joint area shall be thoroughly cleaned just prior to placing seal.

APPROVAL
R.S. Friedman DIRECTOR OFFICE OF BRIDGE DEVEL.
DATE: 3/30/84

REVISIONS	
SHA	FHWA
3-27-89	·
10-27-92	·
1-22-01	·
·	·

FHWA APPROVAL
DATE: 5-3-84

STATE OF MARYLAND
DEPARTMENT OF TRANSPORTATION
STATE HIGHWAY ADMINISTRATION
OFFICE OF BRIDGE DEVELOPMENT

MODIFIED EXISTING BRIDGE DECK
NON-ARMORED EXPANSION JOINT AT ABUTMENTS

STANDARD NO. BR-SS(7.13)-84-160 SHEET 1 OF 1

SUPER-ROADWAY JOINTS

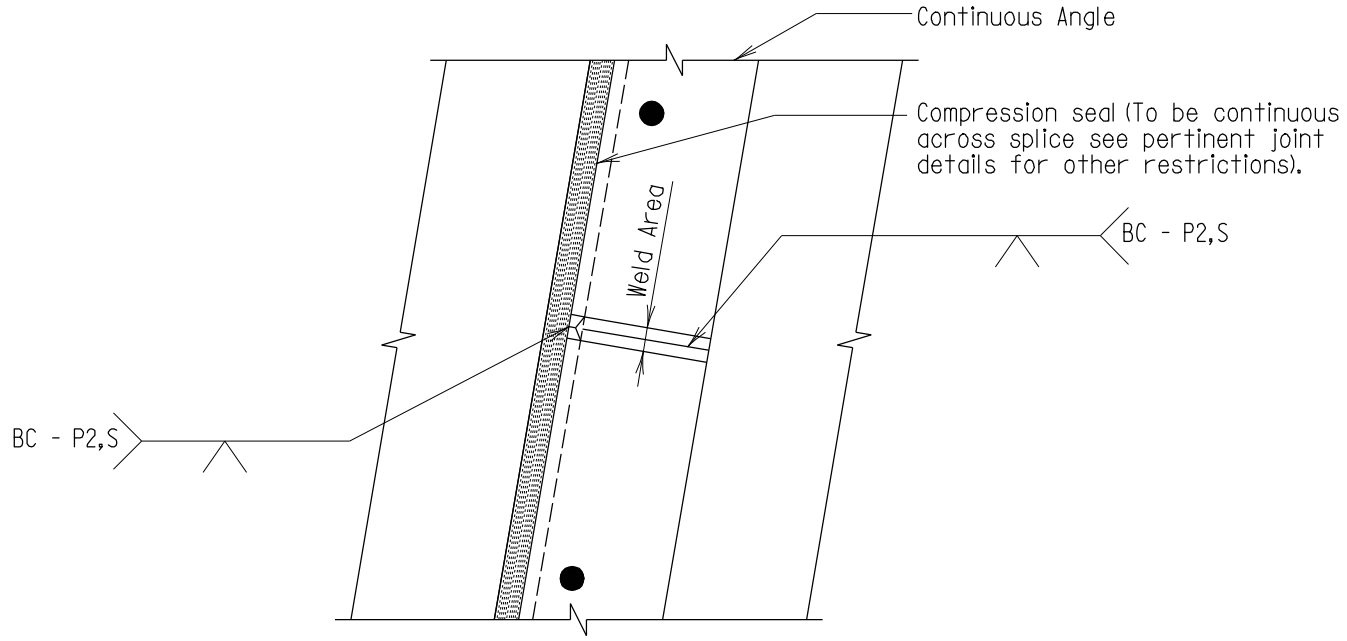

PLAN

JOINT AT ABUTMENTS - WHERE ONE SIDE OF JOINT IS ARMORED

Scale: None

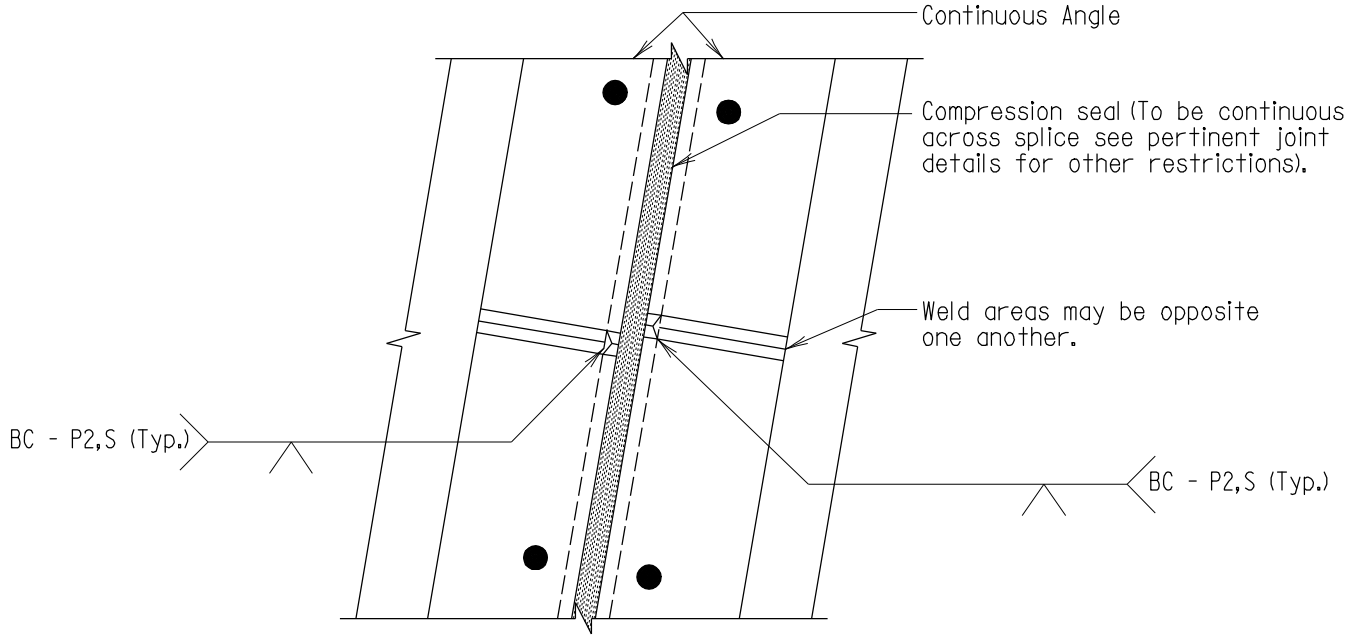

PLAN

JOINT AT PIERS AND ABUTMENTS - WHERE BOTH SIDES OF JOINTS ARE ARMORED

Scale: None

Note:
Whenever possible the need for this splice should be limited. Preferably, the minimum spacing between joints shall be 40'. If there are breaks in the crown or if the joint is skewed; splices may be made at all breaks in slope and may follow the direction of centerline of bridge instead of being perpendicular to center line of bearing.

APPROVAL	
E.S. Freedman DIRECTOR OFFICE OF BRIDGE DEVEL. DATE: 1/14/87	
REVISIONS	
SHA	FHWA
1-22-01	·
·	·
·	·
·	·

FHWA APPROVAL
DATE: 6-8-90

STATE OF MARYLAND
DEPARTMENT OF TRANSPORTATION
STATE HIGHWAY ADMINISTRATION
OFFICE OF BRIDGE DEVELOPMENT

ROADWAY JOINT ANGLE SHOP SPLICES FOR NON-SEQUENTIAL CONSTRUCTION

STANDARD NO. BR-SS(7.15)-86-198 SHEET 1 OF 1

SUPER-ROADWAY JOINTS

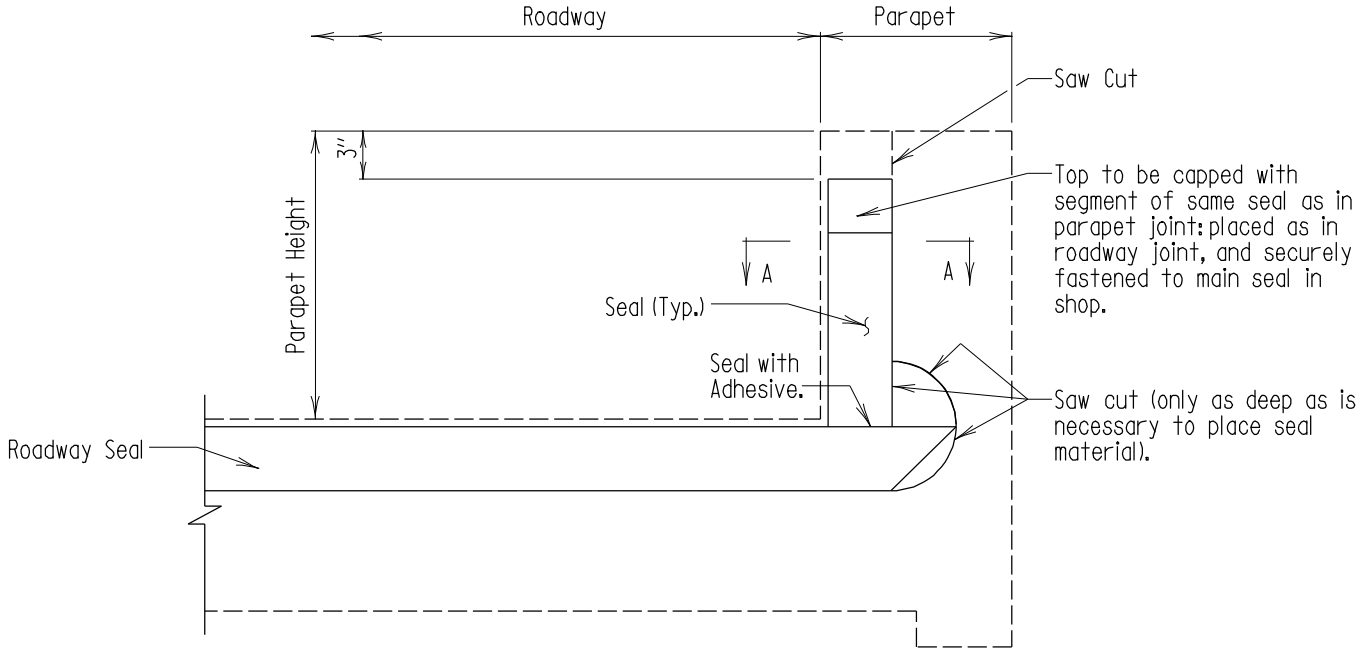

SECTION
Scale: 1" = 1'-0"

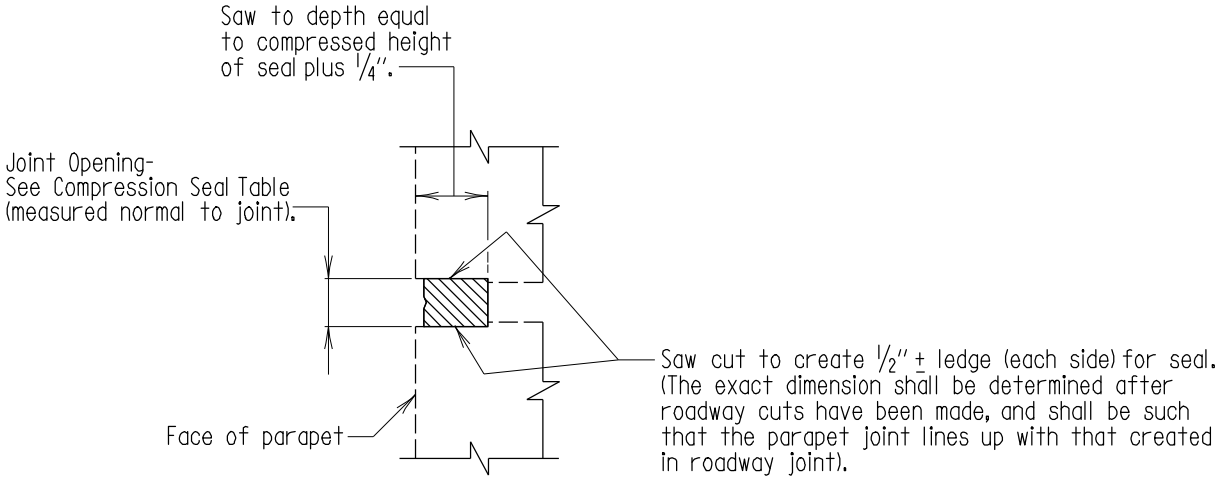

SECTION A-A
Scale: 1" = 1'-0"

Note:
1. Existing structure shown dashed.
2. Existing slab to remain.
3. All gutter line splices of seal, if possible, shall be shop fabricated. All others may be field splices.
4. Joint area shall be thoroughly cleaned just prior to placing of seal.

APPROVAL	
R.S. Freedman DIRECTOR OFFICE OF BRIDGE DEVEL. DATE: 6/21/94	
REVISIONS	
SHA	FHWA
.	.
.	.
.	.
.	.

FHWA APPROVAL
DATE: .

STATE OF MARYLAND
DEPARTMENT OF TRANSPORTATION
STATE HIGHWAY ADMINISTRATION
OFFICE OF BRIDGE DEVELOPMENT

MODIFIED EXISTING BRIDGE
NON-ARMORED JOINT AT PARAPET
(NO WALKWAY)

STANDARD NO. BR-SS(7.16)-94-300 SHEET 1 OF 1

SUPER-ROADWAY JOINTS

GENERAL NOTES

Specifications: Latest Specifications and Special Provisions for materials and construction. Latest AASHTO Standard Specifications for Highway Bridges for design.

Materials: Drainage trough shall conform to 911.11.

Fusion bonded epoxy powder coatings for steel shall conform to 917.02.

Catch basins shall be fiberglass conforming to 921.11.*

Downspouts shall be fiberglass.

Stainless steel bolts shall conform to ASTM A 193, Identification Symbol B 8, Type 304.

Measurement and Payment: Catch basins, downspouts, troughs, etc. will be measured and paid for as specified in 460.04.

* Contractor may substitute stainless steel (10 gauge min.) or galvanized steel (10 gauge min.) catch basins in lieu of fiberglass, at no additional cost to the Administration.

APPROVAL		
E.S. Freedman DIRECTOR OFFICE OF BRIDGE DEVEL. DATE: 11/15/95		
REVISIONS		
SHA	FHWA	
1-22-01	·	
10-17-02	·	
5-10-05	·	
7-14-08	·	

FHWA APPROVAL
DATE:

STATE OF MARYLAND
DEPARTMENT OF TRANSPORTATION
STATE HIGHWAY ADMINISTRATION
OFFICE OF BRIDGE DEVELOPMENT

DRAINAGE TROUGH CATCH BASIN
GENERAL NOTES

STANDARD NO. BR-SS(7.17)-95-313 SHEET 1 OF 5

SUPER-ROADWAY JOINTS

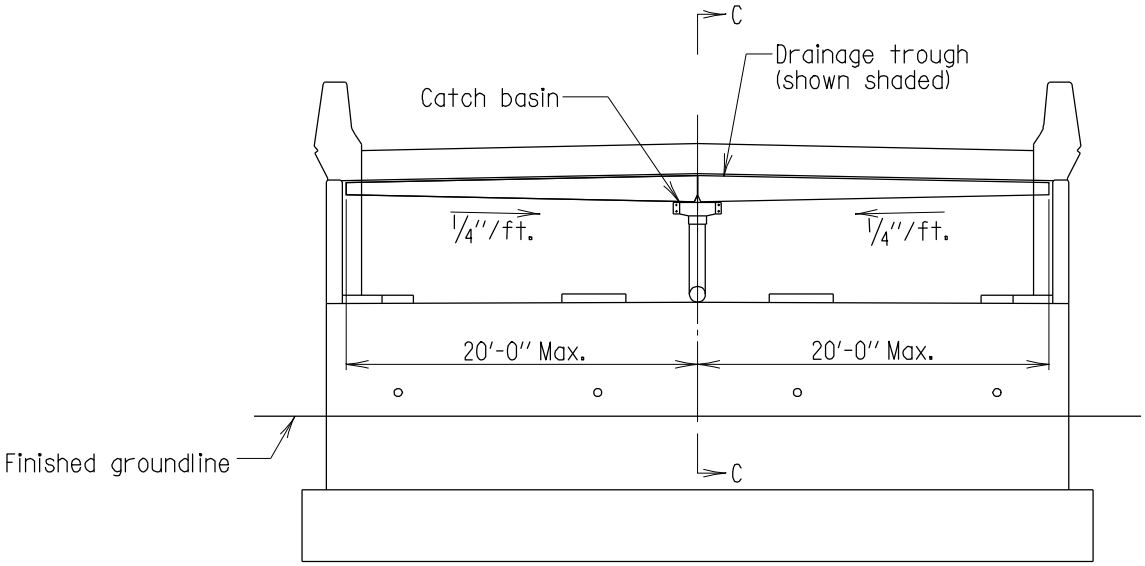

APPROVAL
DATE:

REVISIONS	
SHA	FHWA
.	.
.	.
.	.
.	.

FHWA APPROVAL
DATE:

STANDARD NO.

SUPER-ROADWAY JOINTS

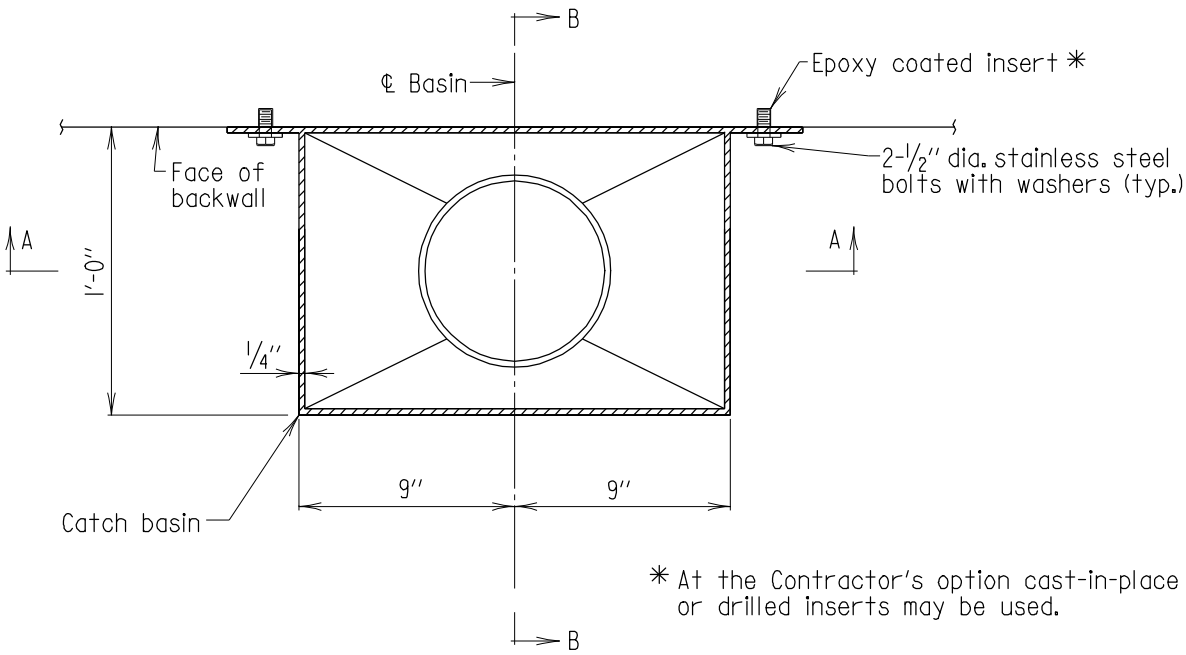

DRAINAGE TROUGH CATCH BASIN

Scale: 1 1/2" = 1'-0"

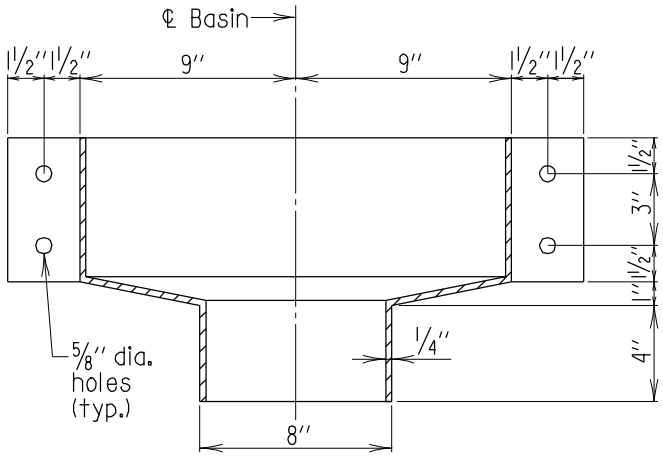

SECTION A-A

Scale: 1 1/2" = 1'-0"

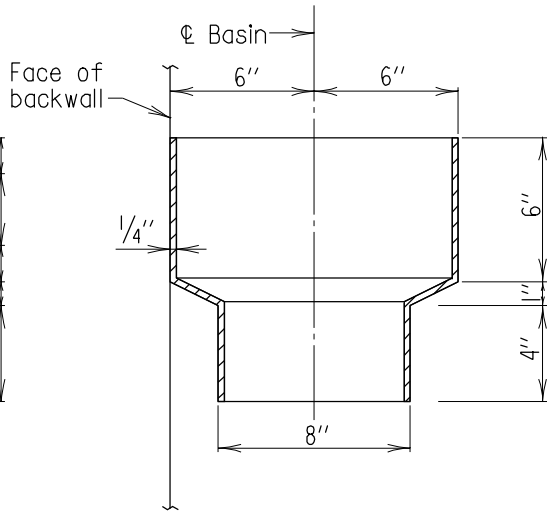

SECTION B-B

Scale: 1 1/2" = 1'-0"

APPROVAL	
E.S. Freedman DIRECTOR OFFICE OF BRIDGE DEVEL. DATE: 11/15/95	
REVISIONS	
SHA	FHWA
10-17-02	·
5-10-05	·
·	·
·	·

FHWA APPROVAL
DATE: .

STATE OF MARYLAND
DEPARTMENT OF TRANSPORTATION
STATE HIGHWAY ADMINISTRATION
OFFICE OF BRIDGE DEVELOPMENT

DRAINAGE TROUGH CATCH BASIN - TYPE A
DETAILS

STANDARD NO. BR-SS(7.17)-95-313

SHEET 3 OF 5

SUPER-ROADWAY JOINTS

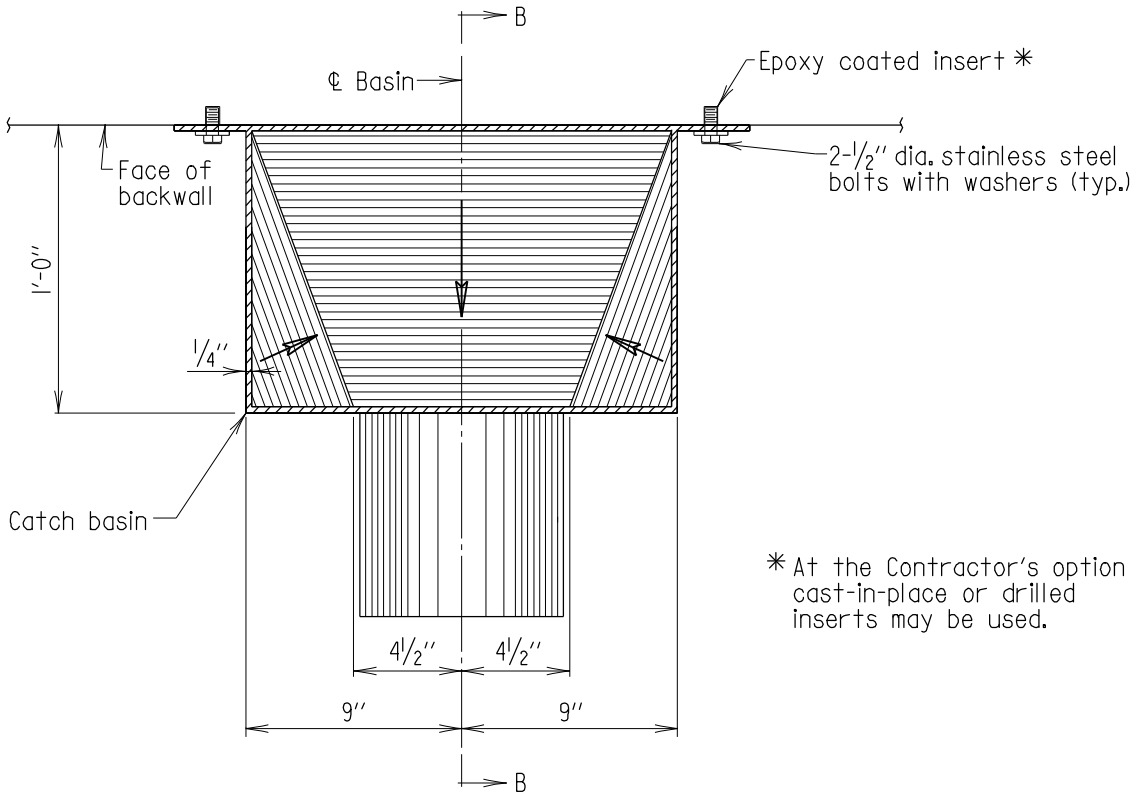

✳ At the Contractor's option cast-in-place or drilled inserts may be used.

DRAINAGE TROUGH CATCH BASIN

Scale: 1 1/2'' = 1'-0''

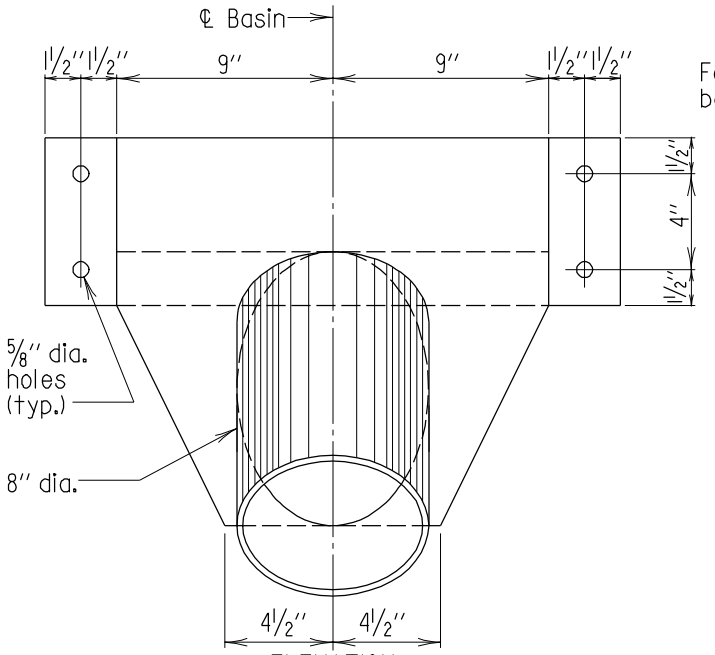

ELEVATION

Scale: 1 1/2'' = 1'-0''

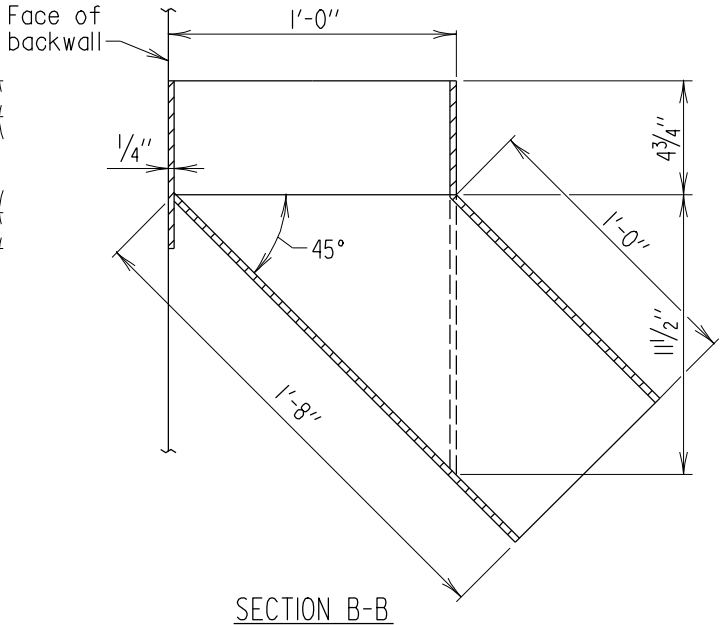

SECTION B-B

Scale: 1 1/2'' = 1'-0''

APPROVAL	
R. S. Freedman DIRECTOR OFFICE OF BRIDGE DEVEL.	
DATE: 10/17/02	
REVISIONS	
SHA	FHWA
5-10-05	·
·	·
·	·
·	·

FHWA APPROVAL
DATE:

STATE OF MARYLAND
DEPARTMENT OF TRANSPORTATION
STATE HIGHWAY ADMINISTRATION
OFFICE OF BRIDGE DEVELOPMENT

DRAINAGE TROUGH CATCH BASIN - TYPE B
DETAILS

STANDARD NO. BR-SS(7.17)-95-313 SHEET 4 OF 5

SUPER-ROADWAY JOINTS

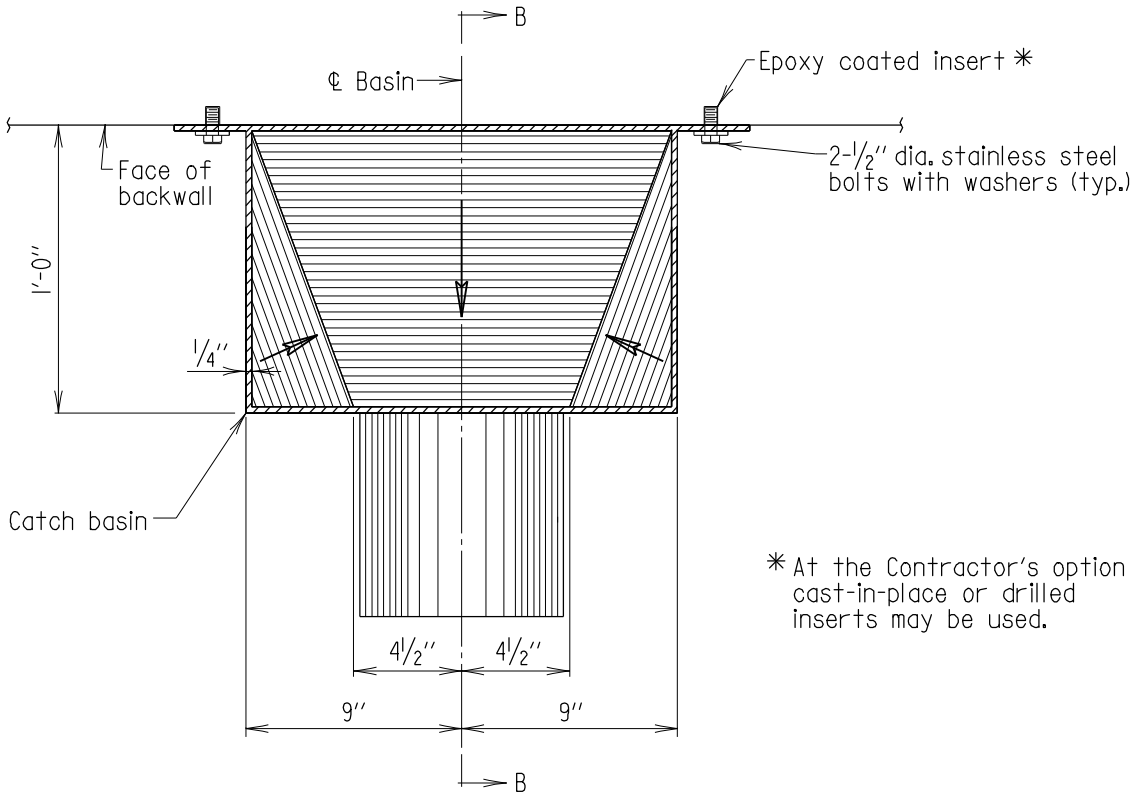

DRAINAGE TROUGH CATCH BASIN

Scale: 1 1/2" = 1'-0"

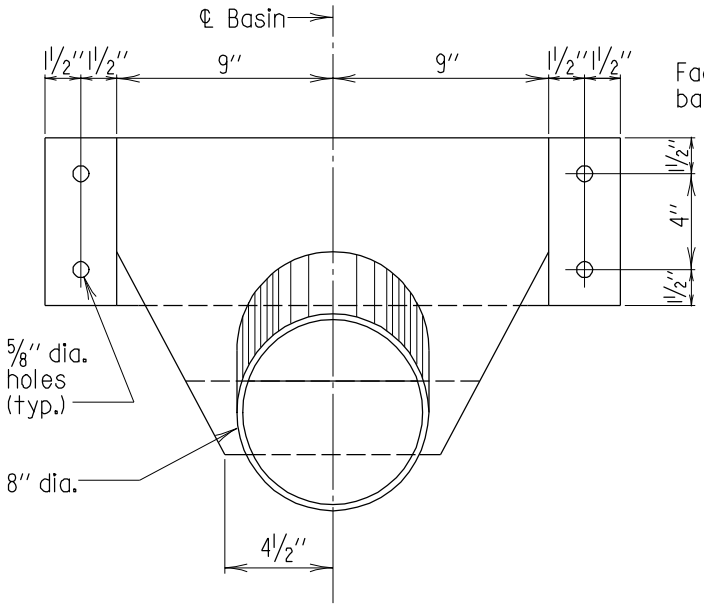

ELEVATION

Scale: 1 1/2" = 1'-0"

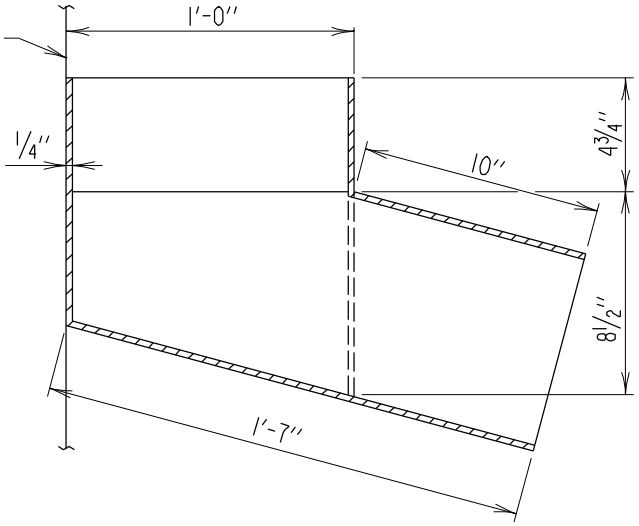

SECTION B-B

Scale: 1 1/2" = 1'-0"

APPROVAL	
E.S. Freedman DIRECTOR OFFICE OF BRIDGE DEVEL. DATE: 10/17/02	
REVISIONS	
SHA	FHWA
5-10-05	·
·	·
·	·
·	·

FHWA APPROVAL
DATE: .

STATE OF MARYLAND
DEPARTMENT OF TRANSPORTATION
STATE HIGHWAY ADMINISTRATION
OFFICE OF BRIDGE DEVELOPMENT

DRAINAGE TROUGH CATCH BASIN - TYPE C
DETAILS

STANDARD NO. BR-SS(7.17)-95-313

SHEET 5 OF 5

SUPER-ROADWAY JOINTS

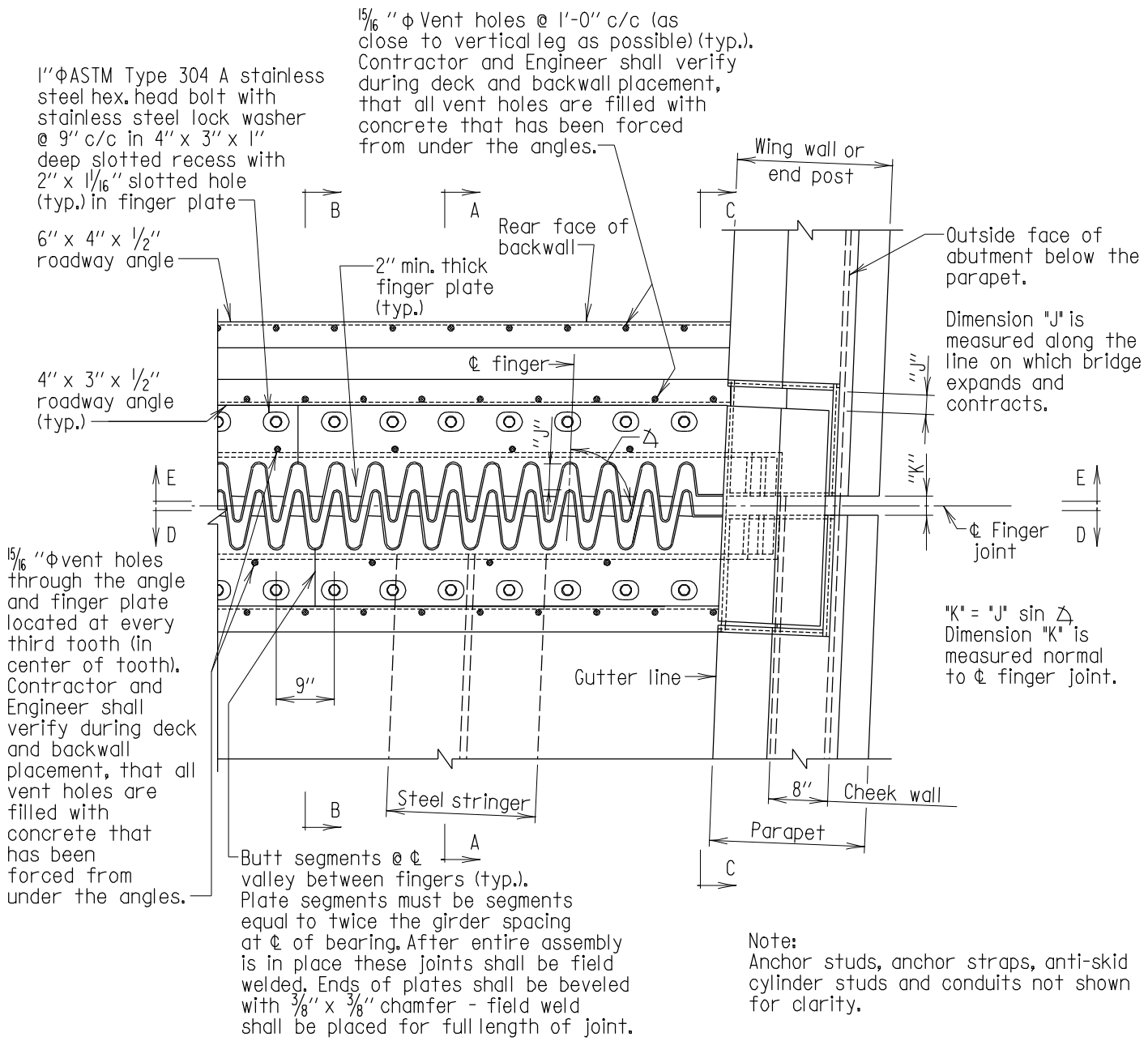

Note:
Anchor studs, anchor straps, anti-skid cylinder studs and conduits not shown for clarity.

PLAN AT ROADWAY LEVEL

Scale: 1/2" = 1'-0"

Note:
℄ finger is parallel to the direction of superstructure movement.

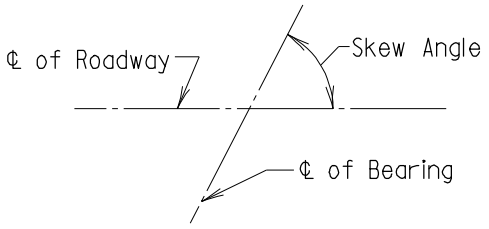

SKEW ANGLE

Scale: None

Notes:
1. For dimensions "J" & "K" and finger plate thickness see Sheet No. 13 of 13.
2. For SECTIONS A-A, B-B, C-C, D-D & E-E see Sheet Nos. 3,4,5,6 & 7 of 13.

APPROVAL	
E.S. Freedman DIRECTOR OFFICE OF BRIDGE DEVEL. DATE: 11/17/97	
REVISIONS	
SHA	FHWA
1-22-01	·
8-19-04	·
10-17-05	·
7-19-06	·

FHWA APPROVAL
DATE:

STATE OF MARYLAND
DEPARTMENT OF TRANSPORTATION
STATE HIGHWAY ADMINISTRATION
OFFICE OF BRIDGE DEVELOPMENT

FINGER JOINT DETAILS (34" F-SHAPE PARAPET)
FOR BRIDGES WITH STEEL STRINGERS
WITH SKEW ANGLES BETWEEN 50° AND 90°

STANDARD NO. BR-SS(7.18)-97-321A

SHEET 1 OF 13

SUPER-ROADWAY JOINTS

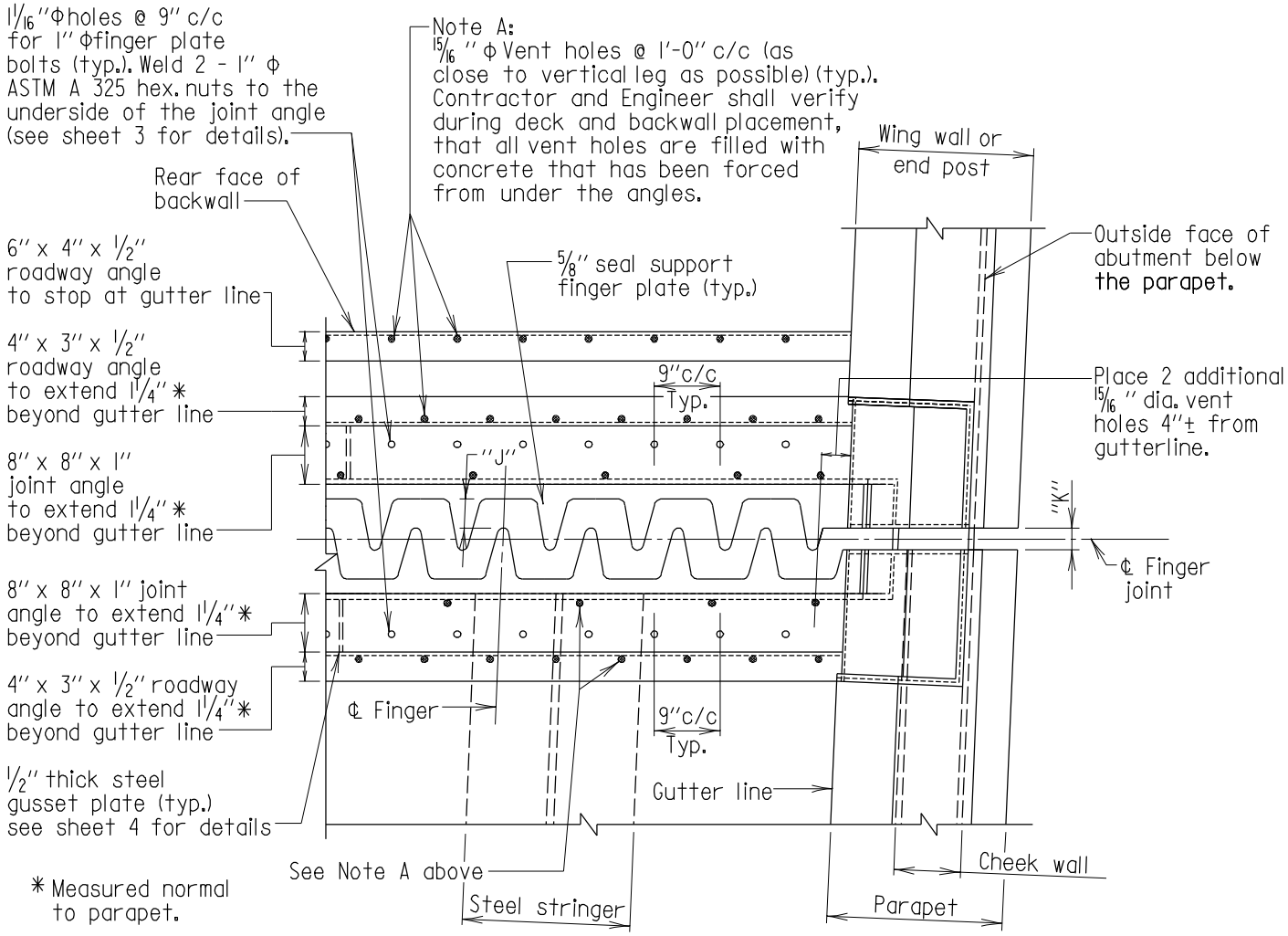

* Measured normal to parapet.

Note:
Anchor studs, anchor straps & conduits not shown for clarity.
℄ finger is parallel to the direction of superstructure movement. Dimension "J" is measured along ℄ finger.

PLAN WITH ROADWAY FINGER PLATES, PARAPET SLIDING PLATE AND FOAM SEAL REMOVED

Scale: 1/2" = 1'-0"

Notes:
1. All details not indicated are the same as Plan at Roadway Level on Sheet No. 1 of 13.
2. For dimensions "J" & "K" see Sheet No. 13 of 13.

APPROVAL	
R.S. Freedman DIRECTOR OFFICE OF BRIDGE DEVEL. DATE: 11/17/97	
REVISIONS	
SHA	FHWA
1-22-01	·
8-19-04	·
10-17-05	·
7-19-06	·

FHWA APPROVAL	
DATE:	

STATE OF MARYLAND
DEPARTMENT OF TRANSPORTATION
STATE HIGHWAY ADMINISTRATION
OFFICE OF BRIDGE DEVELOPMENT

FINGER JOINT DETAILS (34" F-SHAPE PARAPET) FOR BRIDGES WITH STEEL STRINGERS WITH SKEW ANGLES BETWEEN 50° AND 90°

STANDARD NO. BR-SS(7.18)-97-321A

SHEET 2 OF 13

SUPER-ROADWAY JOINTS

1" ϕ ASTM Type 304 A stainless steel hex. head bolt with stainless steel lock washer (typ.)

Joint angle 8" x 8" x 1" (typ.)

Finger plate

4" thick foam seal full length (shown hatched) tight to bottom of finger plates.

15/16" ϕ Vent holes @ 1'-0" c/c (as close to vertical leg as possible) (typ.). Contractor and Engineer shall verify during deck and backwall placement, that all vent holes are filled with concrete that has been forced from under the angles.

Roadway angle 4" x 3" x 1/2" 4" leg horizontal (typ.)

Roadway angle 6" x 4" x 1/2" 4" leg horizontal

1'-9" min.

2 1/2"

1 1/2"

3/4" ϕ threaded rods with opposite threads (one at each girder).

3/4" ϕ x 8" long studs @ 9", stagger @ 4 1/2"

1'-6" **

1 1/2" x 1/2" x 12" strap anchors @ 9" c/c stagger with 3/4" ϕ x 8" studs @ 9" c/c

6"

3/4" ϕ x 8" long studs @ 9" c/c

6"

Typ.

3/4" ϕ sleeve nut

3/4" ϕ x 2" stud

3/8 Typ.

Top flange of steel stringer

8" min. x 4" x 3/4" clip angle

3/4" ϕ bolt

5/8" seal support finger plate

"B"

Abutment backwall

Concrete end diaphragm at abutment

* For gusset plate details see sheet 4.

** This portion of backwall to be placed after the adjacent deck concrete has been placed.

℄ of bearing

2 ASTM A 325 hex. nuts

Typ.

Tack weld after tightening

Bolt length shall allow a min. of 1/2" exposure after tightening

SECTION A-A
TYPICAL SECTION AT STRINGERS
Scale: 3/4" = 1'-0"

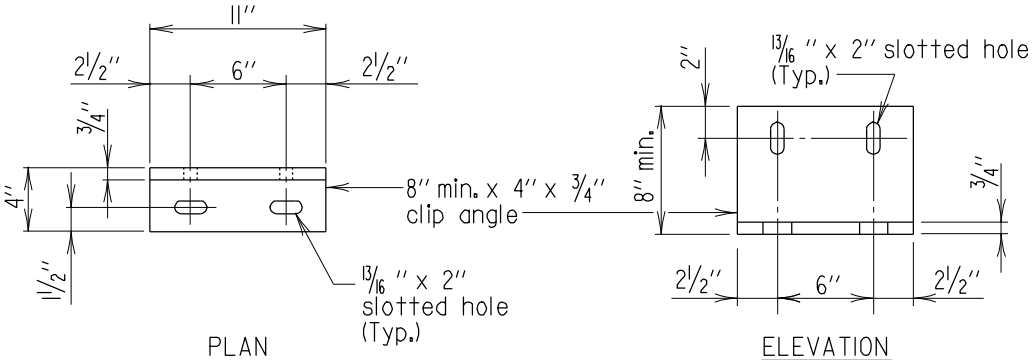

PLAN

ELEVATION

CLIP ANGLE DETAILS
Scale: 1" = 1'-0"

Notes:

1. Finger joint to be fabricated, assembled and shipped to the job site fully assembled.
2. The fully assembled joint shall be installed, bolted and welded into its final position.
3. During concrete deck placement: "CONCRETE MUST APPEAR AT THE TOP OF THE FINGER PLATE INDICATING THAT CONCRETE HAS FILLED THE VOID AREA".
4. For material specifications and requirements, see Special Provisions.
5. For finger plate thickness and dimension "B", see Sheet no. 13 of 13.
6. For details of drainage trough, see Standard No. BR-SS(7.02)-79-64.

APPROVAL
E.S. Freedman DIRECTOR OFFICE OF BRIDGE DEVEL.
DATE: 11/17/97

REVISIONS	
SHA	FHWA
1-22-01	·
8-19-04	·
10-17-05	·
7-19-06	·

FHWA APPROVAL
DATE:

STATE OF MARYLAND
DEPARTMENT OF TRANSPORTATION
STATE HIGHWAY ADMINISTRATION
OFFICE OF BRIDGE DEVELOPMENT

FINGER JOINT DETAILS (34" F-SHAPE PARAPET)
FOR BRIDGES WITH STEEL STRINGERS
WITH SKEW ANGLES BETWEEN 50° AND 90°

STANDARD NO. BR-SS(7.18)-97-321A

SHEET 3 OF 13

SUPER-ROADWAY JOINTS

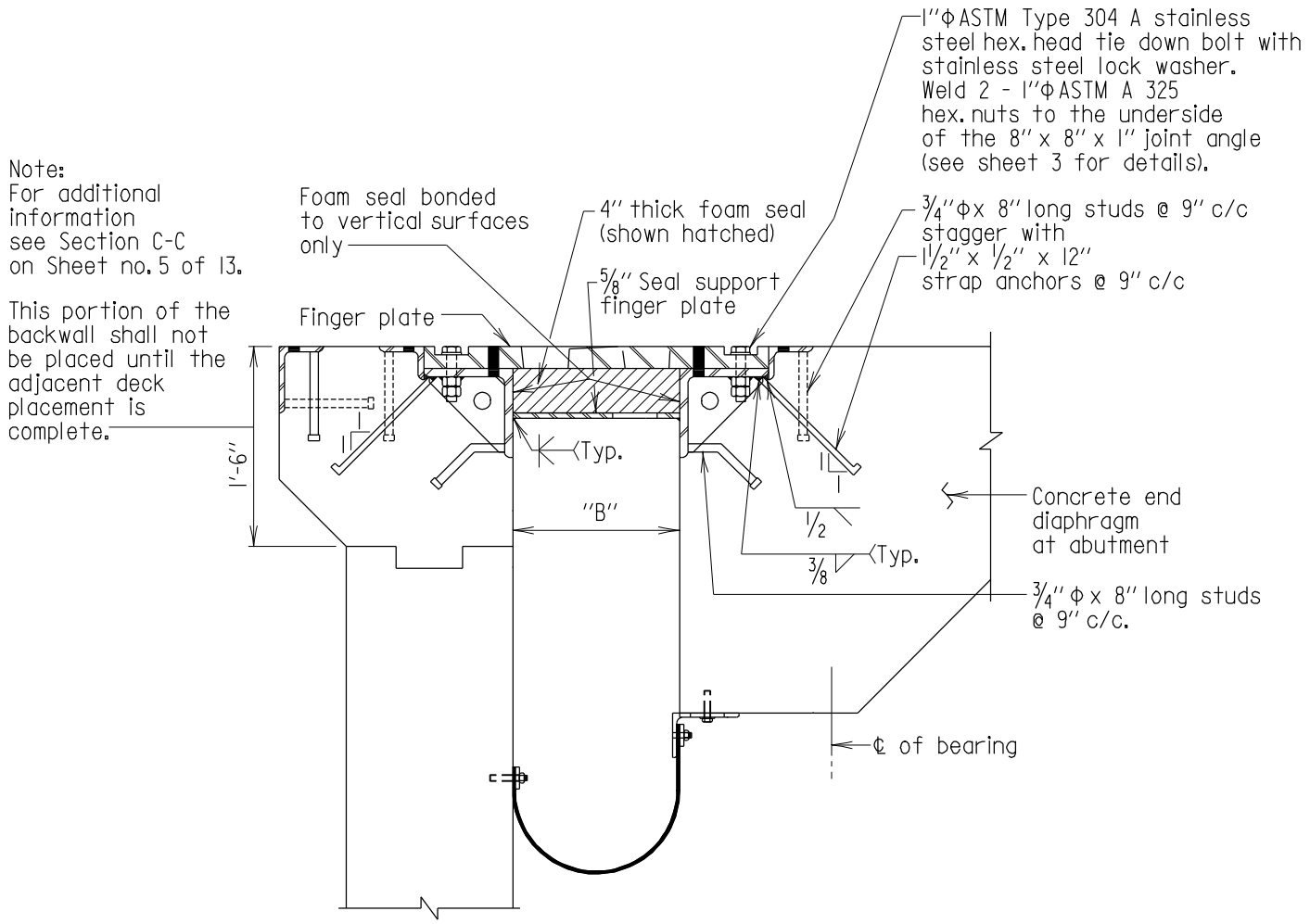

SECTION B-B
TYPICAL SECTION BETWEEN STRINGERS
Scale: 3/4" = 1'-0"

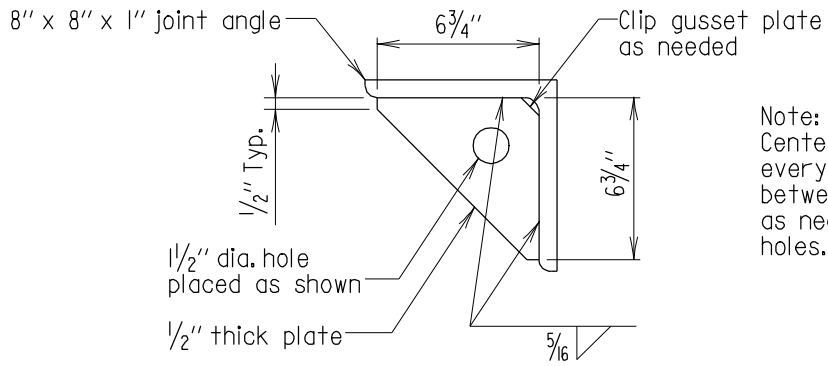

Note:
Center gusset plate between every other tie down bolt between girders. Move plate as necessary to clear vent holes.

GUSSET PLATE DETAILS
Scale: 1 1/2" = 1'-0"

Notes:
1. For finger plate thickness and dimension "B", see Sht. No. 13 of 13.
2. For details of drainage trough, see Standard No. BR-SS(7.02)-79-64.
3. For details not shown see Sheet. no. 3 of 13.

APPROVAL	
R.S. Friedman DIRECTOR OFFICE OF BRIDGE DEVEL. DATE: 11/17/97	
REVISIONS	
SHA	FHWA
1-22-01	·
8-19-04	·
10-17-05	·
·	·

FHWA APPROVAL
DATE:

STATE OF MARYLAND
DEPARTMENT OF TRANSPORTATION
STATE HIGHWAY ADMINISTRATION
OFFICE OF BRIDGE DEVELOPMENT

FINGER JOINT DETAILS (34" F-SHAPE PARAPET)
FOR BRIDGES WITH STEEL STRINGERS
WITH SKEW ANGLES BETWEEN 50° AND 90°

STANDARD NO. BR-SS(7.18)-97-321A SHEET 4 OF 13

SUPER-ROADWAY JOINTS

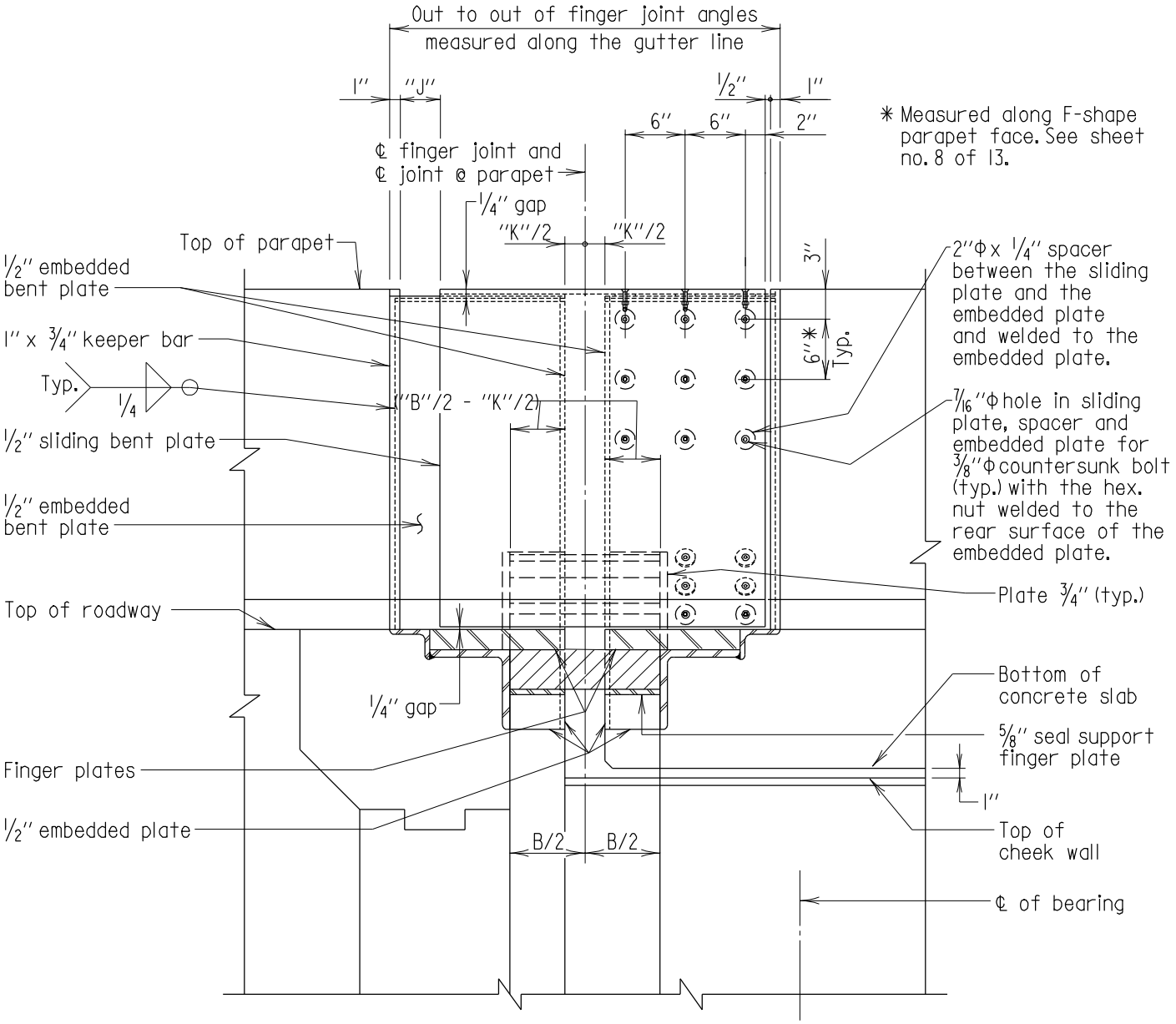

SECTION C-C

Scale: 3/4" = 1'-0"

Note:
For dimensions "B", "K", & "J" see Sheet No. 13 of 13.

APPROVAL		
R. S. Freedman DIRECTOR OFFICE OF BRIDGE DEVEL. DATE: 11/17/97		
REVISIONS		
SHA	FHWA	
8-19-04	·	
·	·	
·	·	
·	·	

FHWA APPROVAL
DATE:

STATE OF MARYLAND
DEPARTMENT OF TRANSPORTATION
STATE HIGHWAY ADMINISTRATION
OFFICE OF BRIDGE DEVELOPMENT

FINGER JOINT DETAILS (34" F-SHAPE PARAPET)
FOR BRIDGES WITH STEEL STRINGERS
WITH SKEW ANGLES BETWEEN 50° AND 90°

STANDARD NO. BR-SS(7.18)-97-321A

SHEET 5 OF 13

SUPER-ROADWAY JOINTS

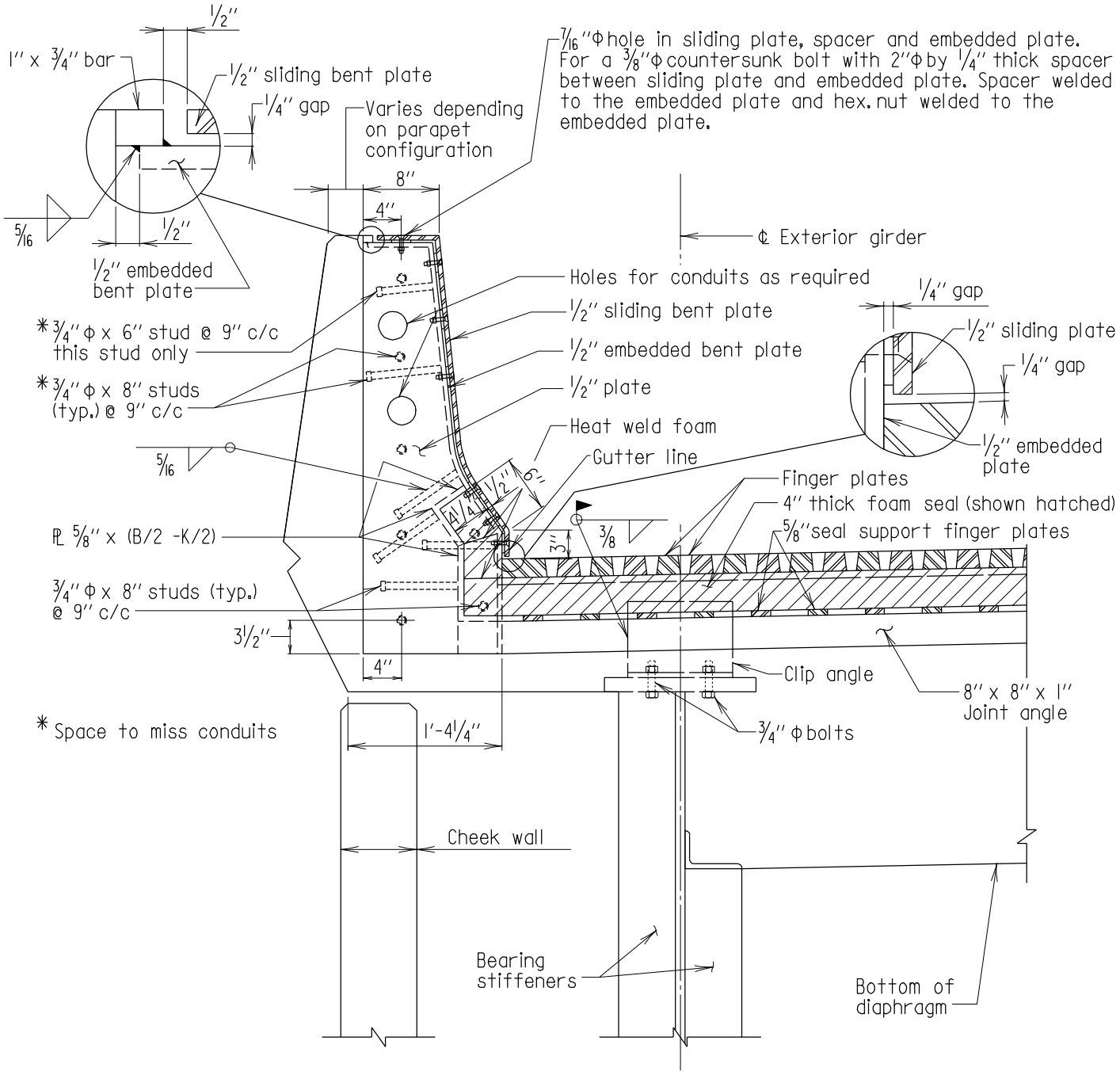

Note:
Drainage trough not shown for clarity.

SECTION D-D
Scale: 3/4" = 1'-0"

Notes:
1. For parapet dimensions see BR-SS(6.25)-84-159A.
2. Diamond back parapet shown, for exact configuration see Typical Section.

APPROVAL	
R S Freedman DIRECTOR OFFICE OF BRIDGE DEVEL. DATE: 11/17/97	
REVISIONS	
SHA	FHWA
8-19-04	·
10-17-05	·
·	·
·	·

FHWA APPROVAL
DATE:

STATE OF MARYLAND
DEPARTMENT OF TRANSPORTATION
STATE HIGHWAY ADMINISTRATION
OFFICE OF BRIDGE DEVELOPMENT

FINGER JOINT DETAILS (34" F-SHAPE PARAPET)
FOR BRIDGES WITH STEEL STRINGERS
WITH SKEW ANGLES BETWEEN 50° AND 90°

STANDARD NO. BR-SS(7.18)-97-321A

SHEET 6 OF 13

SUPER-ROADWAY JOINTS

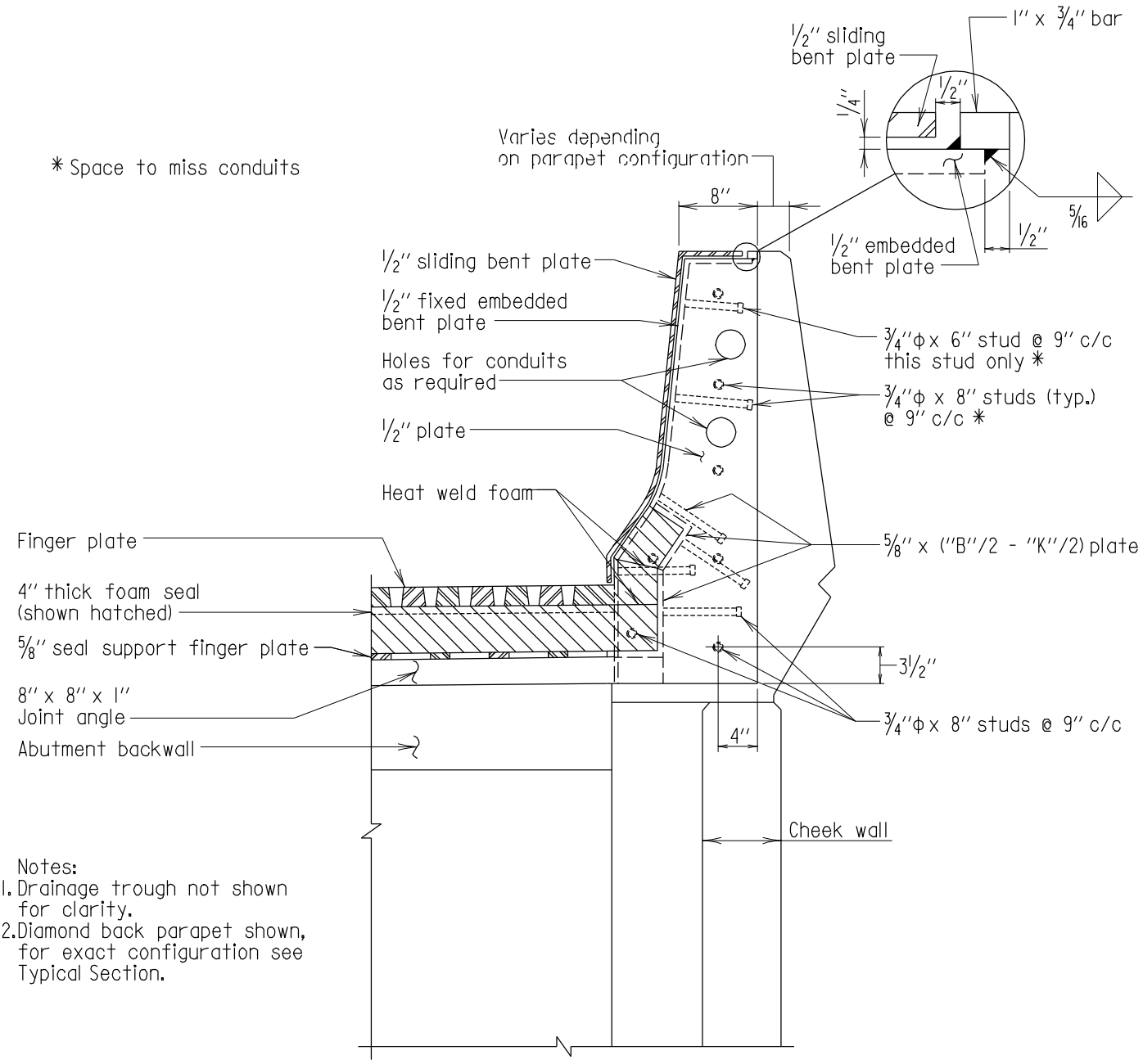

Notes:
1. Drainage trough not shown for clarity.
2. Diamond back parapet shown, for exact configuration see Typical Section.

SECTION E-E

Scale: 3/4" = 1'-0"

APPROVAL	
E.S. Freedman DIRECTOR OFFICE OF BRIDGE DEVEL. DATE: 11/17/97	
REVISIONS	
SHA	FHWA
8-19-04	·
10-17-05	·
·	·
·	·

FHWA APPROVAL
DATE:

STATE OF MARYLAND
DEPARTMENT OF TRANSPORTATION
STATE HIGHWAY ADMINISTRATION
OFFICE OF BRIDGE DEVELOPMENT

FINGER JOINT DETAILS (34" F-SHAPE PARAPET)
FOR BRIDGES WITH STEEL STRINGERS
WITH SKEW ANGLES BETWEEN 50° AND 90°

STANDARD NO. BR-SS(7.18)-97-321A

SHEET 7 OF 13

SUPER-ROADWAY JOINTS

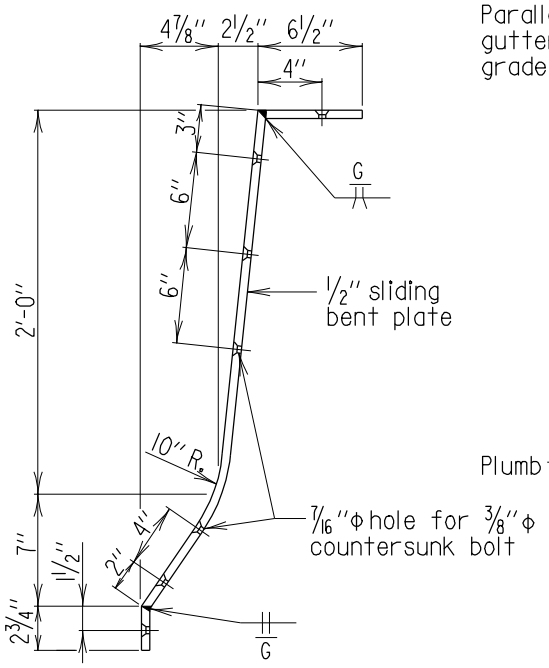

END VIEW

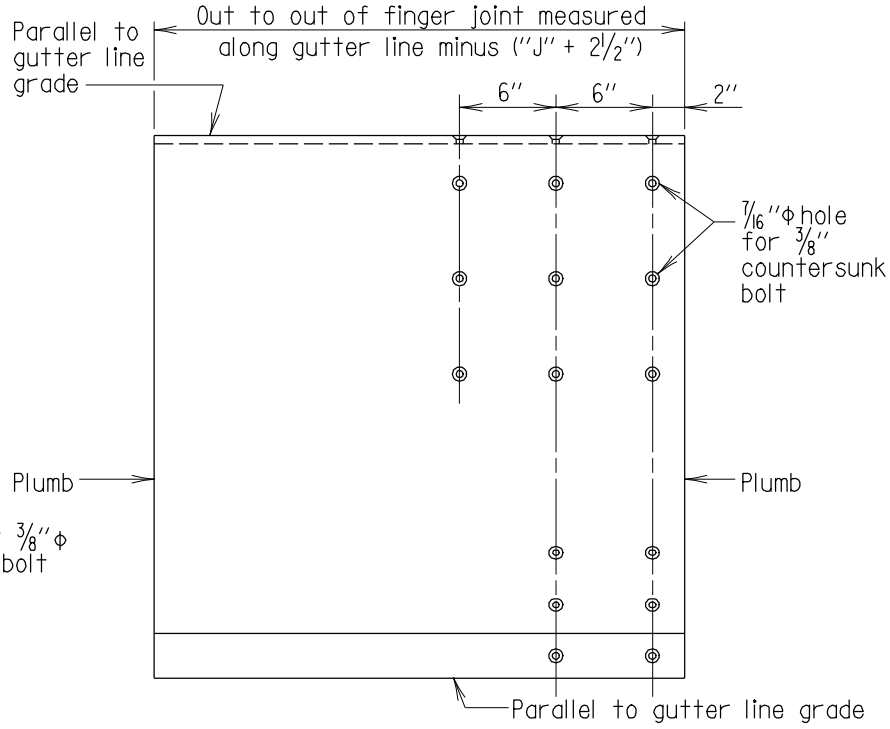

FRONT VIEW

SLIDING PLATE

Scale: 1" = 1'-0"

APPROVAL	
R.S. Freedman DIRECTOR OFFICE OF BRIDGE DEVEL. DATE: 11/17/97	
REVISIONS	
SHA	FHWA
8-19-04	·
·	·
·	·
·	·

FHWA APPROVAL
DATE: .

STATE OF MARYLAND
DEPARTMENT OF TRANSPORTATION
STATE HIGHWAY ADMINISTRATION
OFFICE OF BRIDGE DEVELOPMENT

FINGER JOINT DETAILS (34" F-SHAPE PARAPET)
FOR BRIDGES WITH STEEL STRINGERS
WITH SKEW ANGLES BETWEEN 50° AND 90°

STANDARD NO. BR-SS(7.18)-97-321A

SHEET 8 OF 13

SUPER-ROADWAY JOINTS

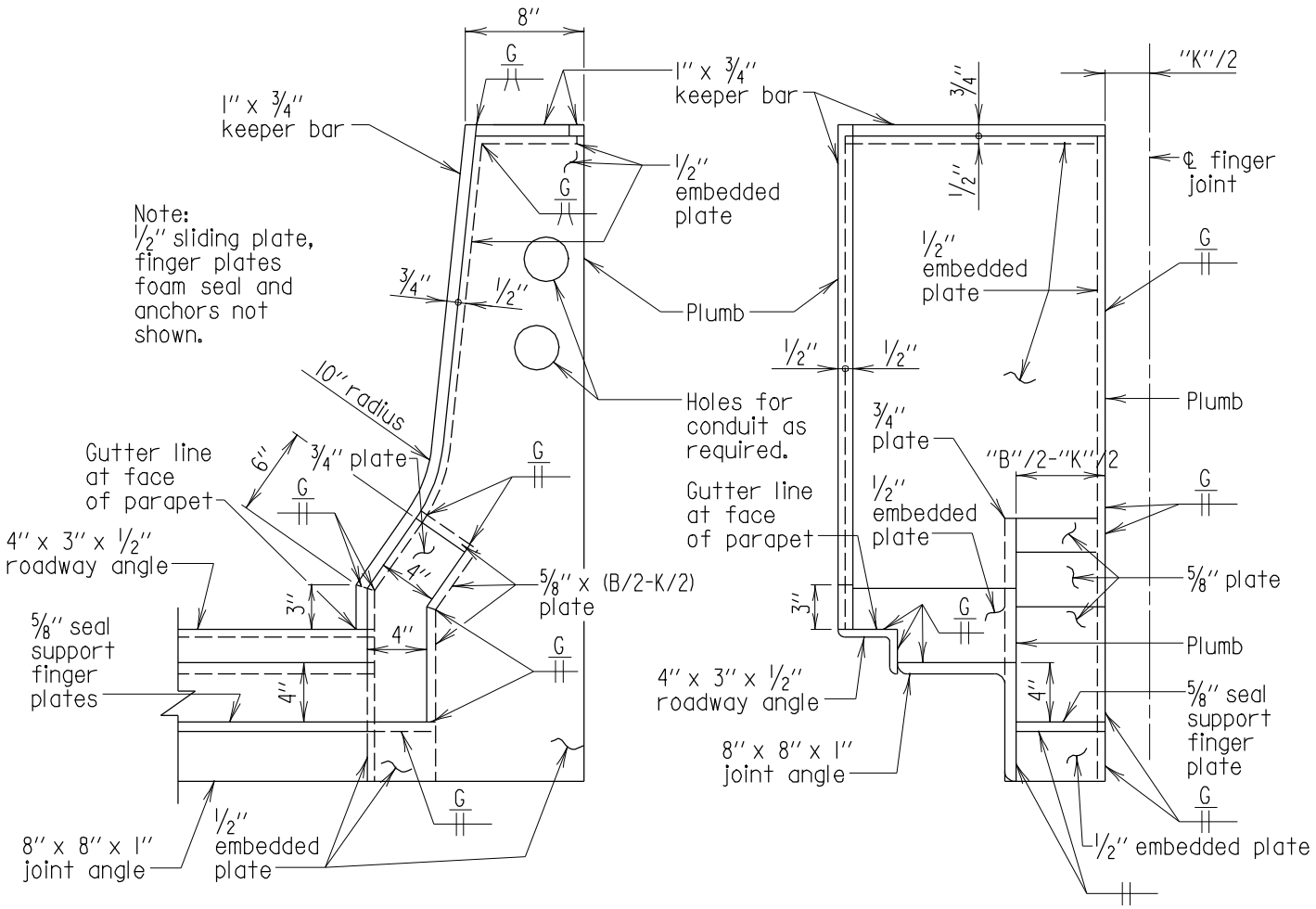

EMBEDDED PLATE - EXPANSION END

Scale: 1'' = 1'-0''

APPROVAL	
R.S. Freedman DIRECTOR OFFICE OF BRIDGE DEVEL. DATE: 11/17/97	
REVISIONS	
SHA	FHWA
8-19-04	·
10-17-05	·
·	·
·	·

FHWA APPROVAL
DATE: .

STATE OF MARYLAND
DEPARTMENT OF TRANSPORTATION
STATE HIGHWAY ADMINISTRATION
OFFICE OF BRIDGE DEVELOPMENT

FINGER JOINT DETAILS (34'' F-SHAPE PARAPET)
FOR BRIDGES WITH STEEL STRINGERS
WITH SKEW ANGLES BETWEEN 50° AND 90°

STANDARD NO. BR-SS(7.18)-97-321A

SHEET 9 OF 13

SUPER-ROADWAY JOINTS

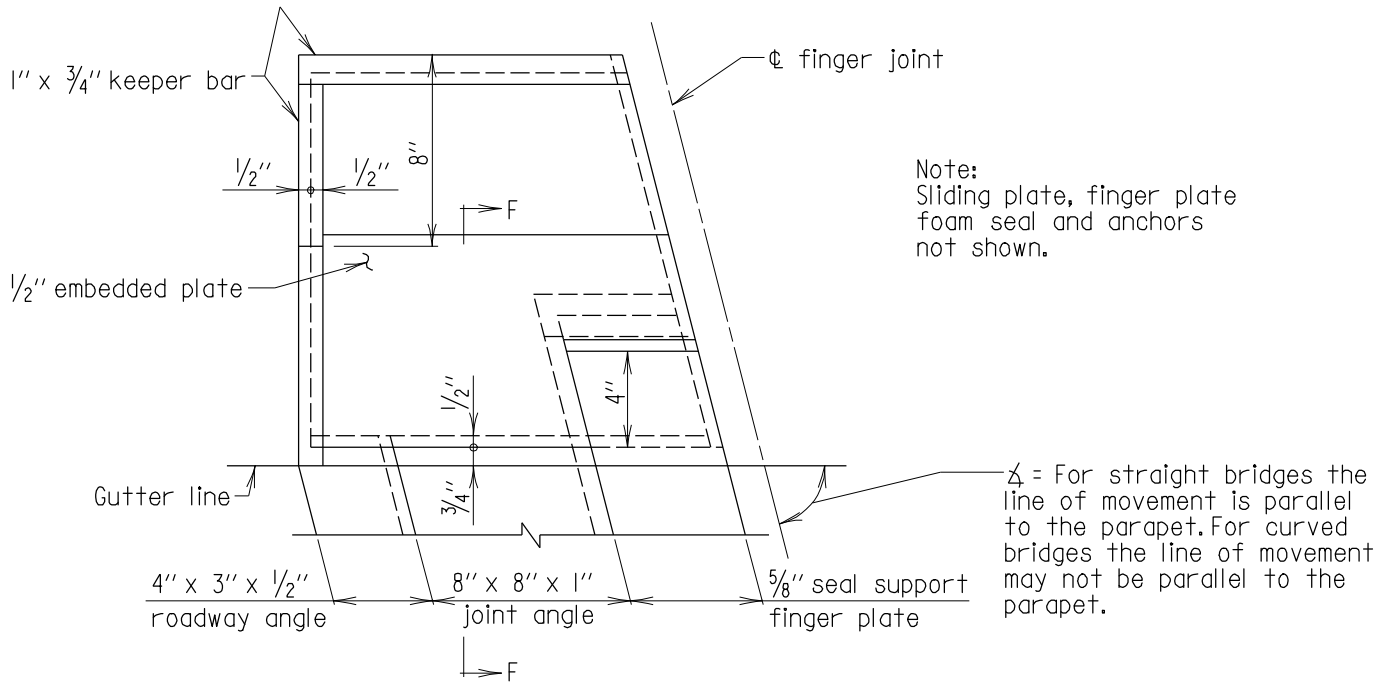

TOP VIEW
EMBEDDED PLATE - EXPANSION END
Scale: 1 1/2" = 1'-0"

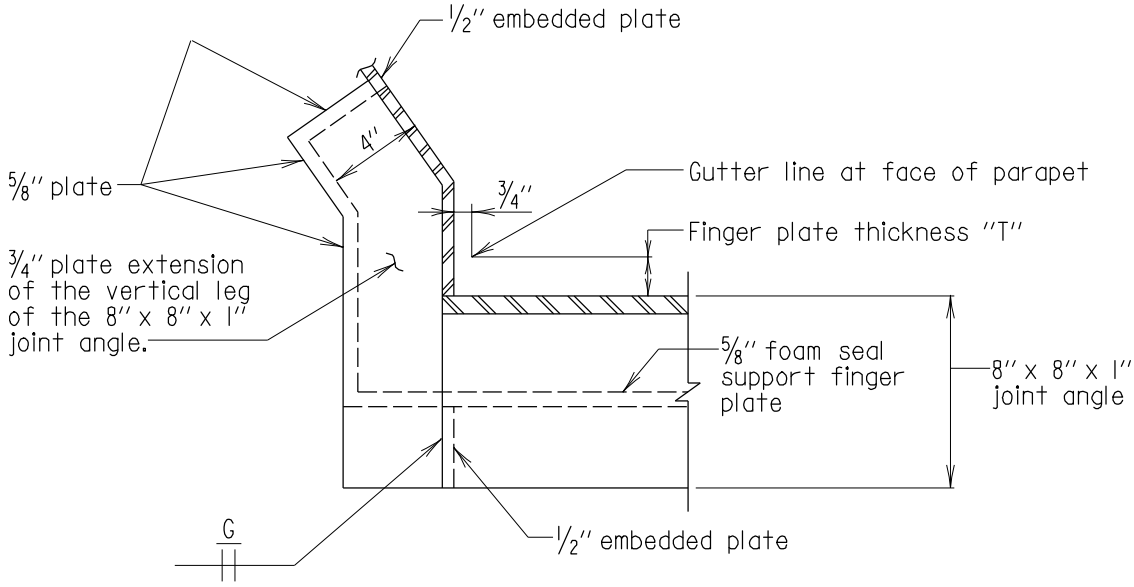

SECTION F-F
Scale: 1 1/2" = 1'-0"

APPROVAL		
E.S. Freedman DIRECTOR OFFICE OF BRIDGE DEVEL. DATE: 11/17/97		
REVISIONS		
SHA	FHWA	
8-19-04	·	
10-17-05	·	
·	·	
·	·	

FHWA APPROVAL
DATE:

STATE OF MARYLAND
DEPARTMENT OF TRANSPORTATION
STATE HIGHWAY ADMINISTRATION
OFFICE OF BRIDGE DEVELOPMENT

FINGER JOINT DETAILS (34" F-SHAPE PARAPET)
FOR BRIDGES WITH STEEL STRINGERS
WITH SKEW ANGLES BETWEEN 50° AND 90°

STANDARD NO. BR-SS(7.18)-97-321A

SHEET 10 OF 13

SUPER-ROADWAY JOINTS

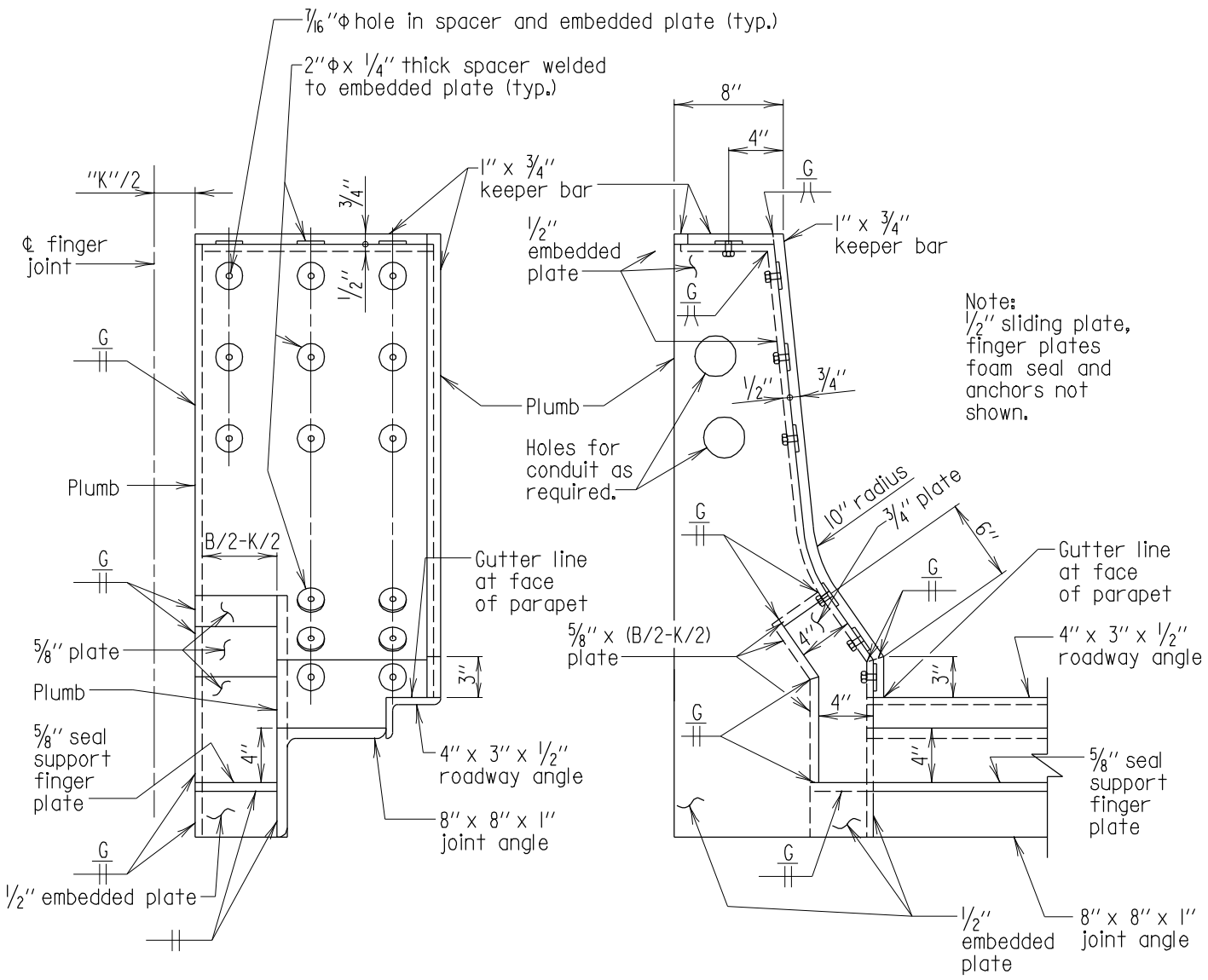

FRONT VIEW

END VIEW FROM ℄ FINGER JOINT

EMBEDDED PLATE - FIXED END

Scale: 1" = 1'-0"

APPROVAL	
E.S. Freedman DIRECTOR OFFICE OF BRIDGE DEVEL. DATE: 11/17/97	
REVISIONS	
SHA	FHWA
8-19-04	·
10-17-05	·
·	·
·	·

FHWA APPROVAL
DATE: .

STATE OF MARYLAND
DEPARTMENT OF TRANSPORTATION
STATE HIGHWAY ADMINISTRATION
OFFICE OF BRIDGE DEVELOPMENT

FINGER JOINT DETAILS (34" F-SHAPE PARAPET)
FOR BRIDGES WITH STEEL STRINGERS
WITH SKEW ANGLES BETWEEN 50° AND 90°

STANDARD NO. BR-SS(7.18)-97-321A

SHEET 11 OF 13

SUPER-ROADWAY JOINTS

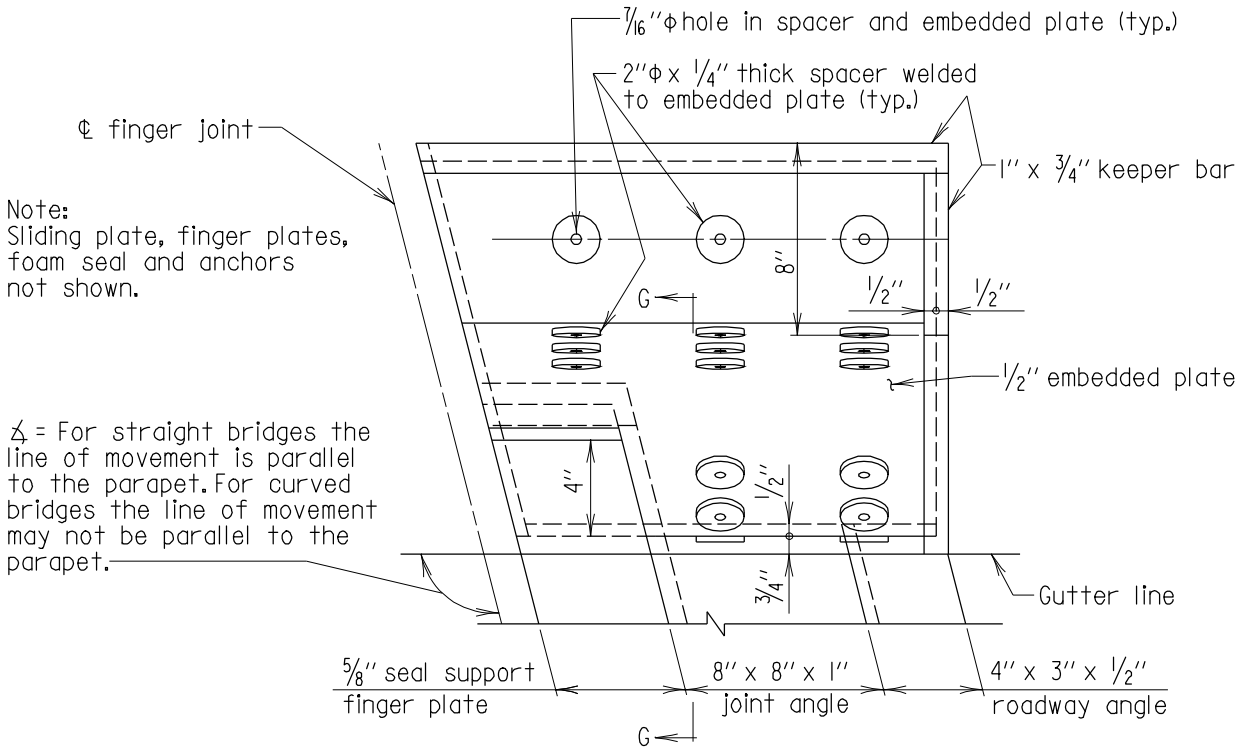

TOP VIEW
EMBEDDED PLATE - FIXED END
Scale: 1 1/2" = 1'-0"

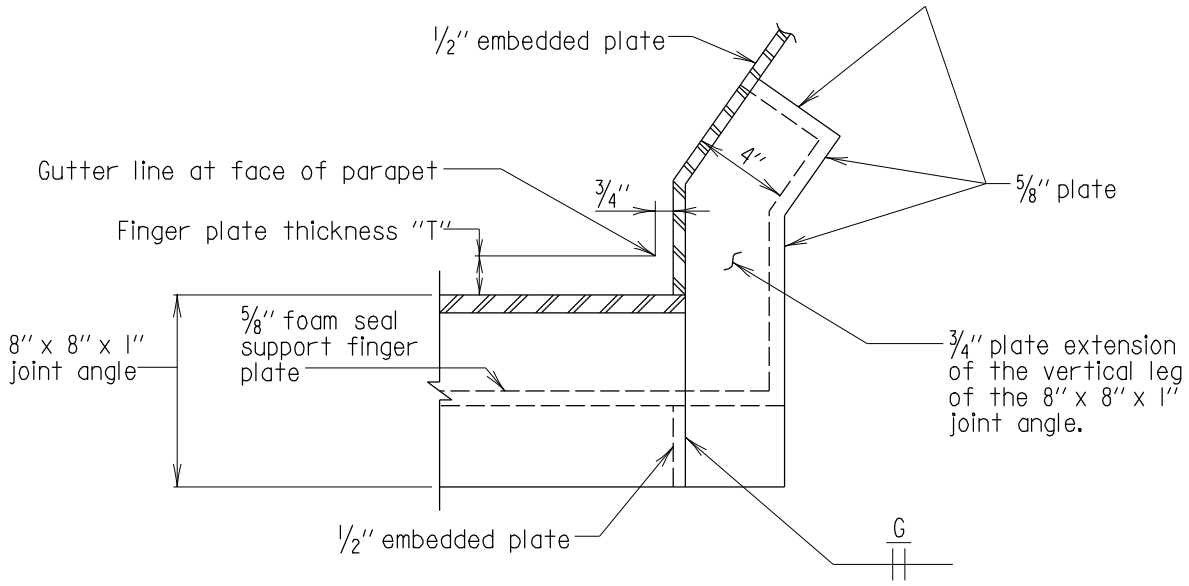

SECTION G-G
Scale: 1 1/2" = 1'-0"

APPROVAL	
R.S. Freedman DIRECTOR OFFICE OF BRIDGE DEVEL. DATE: 11/17/97	
REVISIONS	
SHA	FHWA
8-19-04	·
10-17-05	·
·	·
·	·

FHWA APPROVAL	
DATE:	

STATE OF MARYLAND
DEPARTMENT OF TRANSPORTATION
STATE HIGHWAY ADMINISTRATION
OFFICE OF BRIDGE DEVELOPMENT

FINGER JOINT DETAILS (34" F-SHAPE PARAPET)
FOR BRIDGES WITH STEEL STRINGERS
WITH SKEW ANGLES BETWEEN 50° AND 90°

STANDARD NO. BR-SS(7.18)-97-321A

SHEET 12 OF 13

SUPER-ROADWAY JOINTS

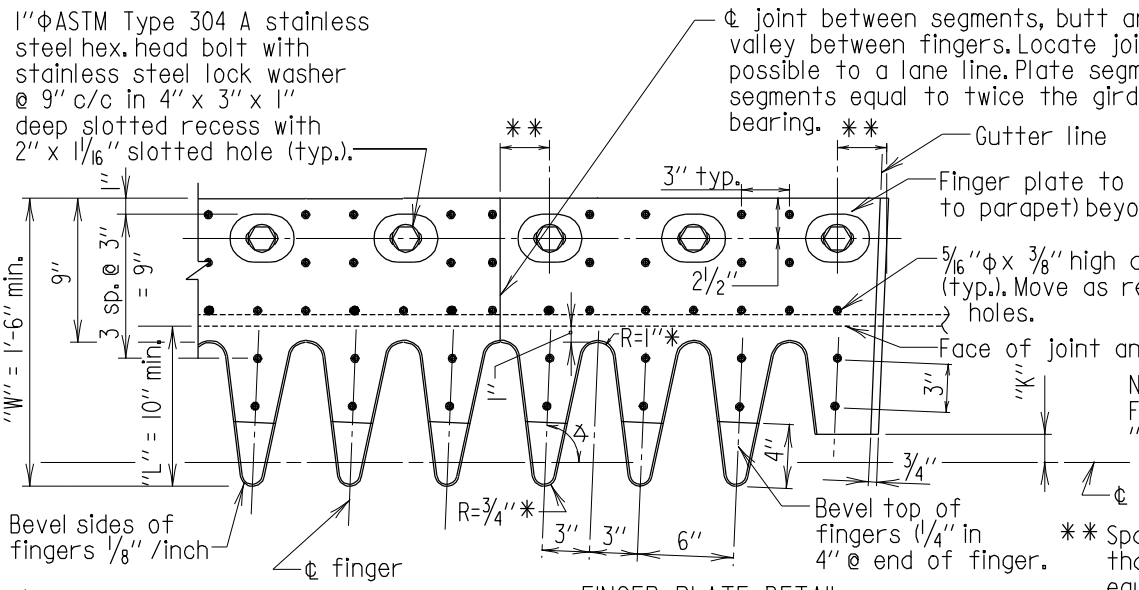

FINGER PLATE DETAIL

Scale: 1" = 1'-0"

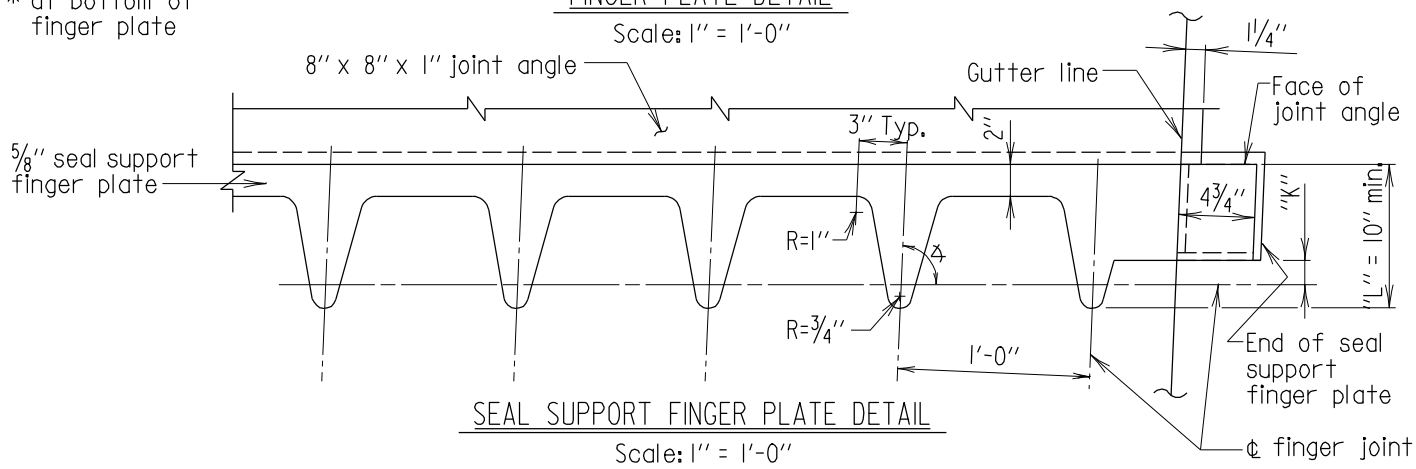

SEAL SUPPORT FINGER PLATE DETAIL

Scale: 1" = 1'-0"

JOINT OPENING TABLE (INCHES)							
LOCATION OF JOINT		JOINT OPENING AT					
		40° F.	50° F.	60° F.	70° F.	80° F.	90° F.
	J	·	·	·	·	·	·
	K	·	·	·	·	·	·
	B	·	·	·	·	·	·

"J" = Finger plate opening along ℄ of finger (See Sheet No. 1 of 13)

"K" = Finger plate opening normal to ℄ of joint (See Sheet No. 1 of 13)

"B" = Joint opening between joint angles normal to ℄ of joint (See Sheet No. 3 of 13)

"∡" = Skew Angle of straight bridges, angle along which the bridge expands, and contracts for curved bridges.

"T" = _____

"L" = _____

"W" = _____

"∡" = _____

APPROVAL	
R.S. Freeman DIRECTOR OFFICE OF BRIDGE DEVEL. DATE: 11/17/97	
REVISIONS	
SHA	FHWA
1-22-01	·
8-19-04	·
10-17-05	·
·	·

FHWA APPROVAL
DATE:

STATE OF MARYLAND
DEPARTMENT OF TRANSPORTATION
STATE HIGHWAY ADMINISTRATION
OFFICE OF BRIDGE DEVELOPMENT

FINGER JOINT DETAILS (34" F-SHAPE PARAPET)
FOR BRIDGES WITH STEEL STRINGERS
WITH SKEW ANGLES BETWEEN 50° AND 90°

STANDARD NO. BR-SS(7.18)-97-321A

SHEET 13 OF 13

SUPER-ROADWAY JOINTS

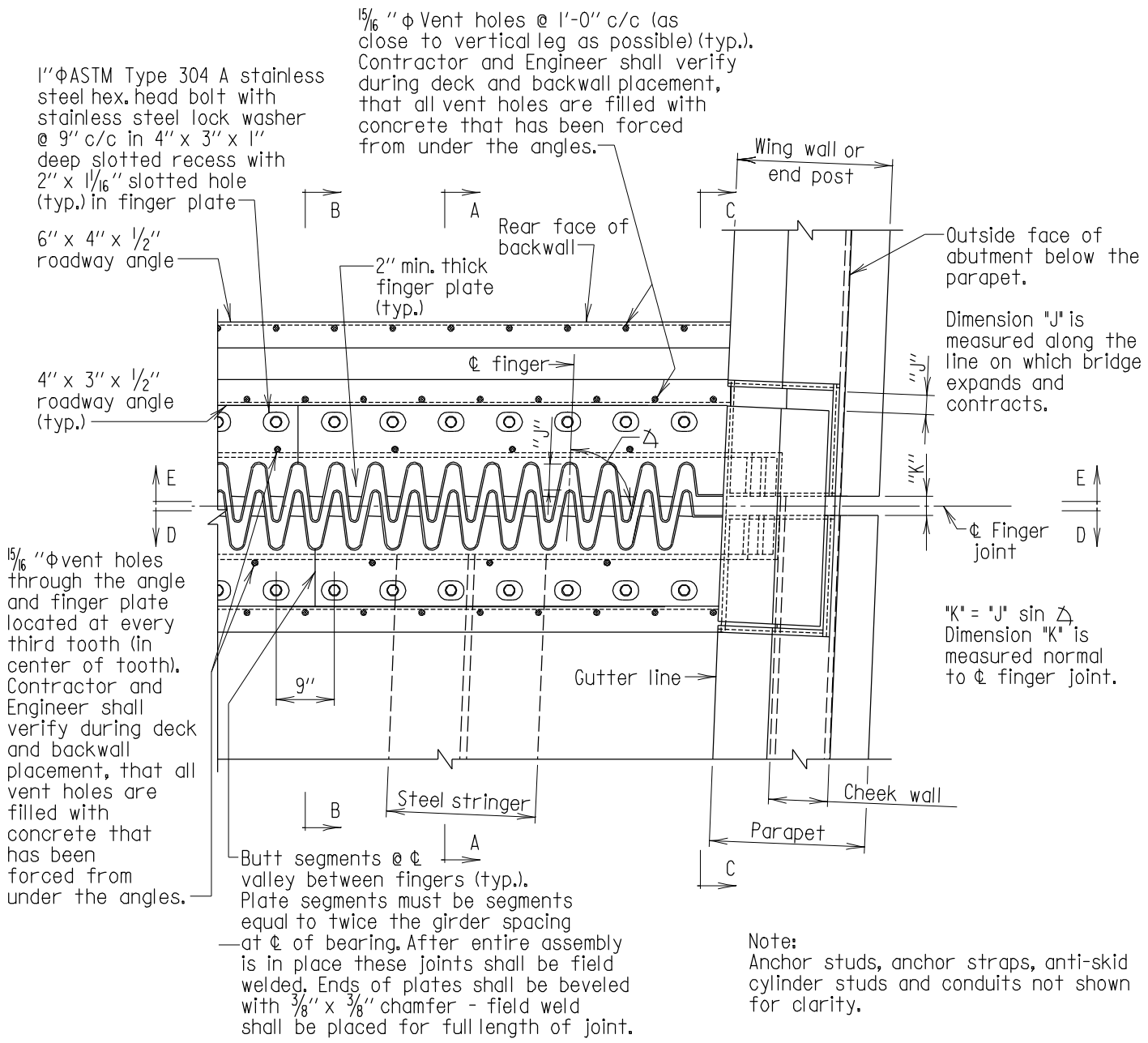

Note:
Anchor studs, anchor straps, anti-skid cylinder studs and conduits not shown for clarity.

PLAN AT ROADWAY LEVEL

Scale: 1/2" = 1'-0"

Note:
℄ finger is parallel to the direction of superstructure movement.

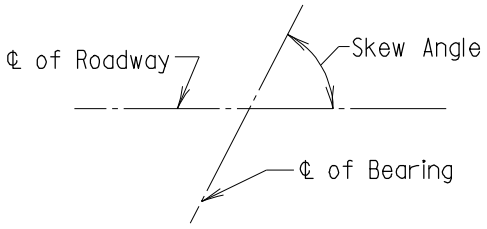

SKEW ANGLE

Scale: None

Notes:
1. For dimensions "J" & "K" and finger plate thickness see Sheet No. 13 of 13.
2. For SECTIONS A-A, B-B, C-C, D-D & E-E see Sheet Nos. 3,4,5,6 & 7 of 13.

APPROVAL	
R S Freedman DIRECTOR OFFICE OF BRIDGE DEVEL.	
DATE: 8/19/04	
REVISIONS	
SHA	FHWA
10-17-05	·
7-19-06	·
·	·
·	·

FHWA APPROVAL
DATE:

STATE OF MARYLAND
DEPARTMENT OF TRANSPORTATION
STATE HIGHWAY ADMINISTRATION
OFFICE OF BRIDGE DEVELOPMENT

FINGER JOINT DETAILS (42" F-SHAPE PARAPET)
FOR BRIDGES WITH STEEL STRINGERS
WITH SKEW ANGLES BETWEEN 50° AND 90°

STANDARD NO. BR-SS(7.18)-04-321B SHEET 1 OF 13

SUPER-ROADWAY JOINTS

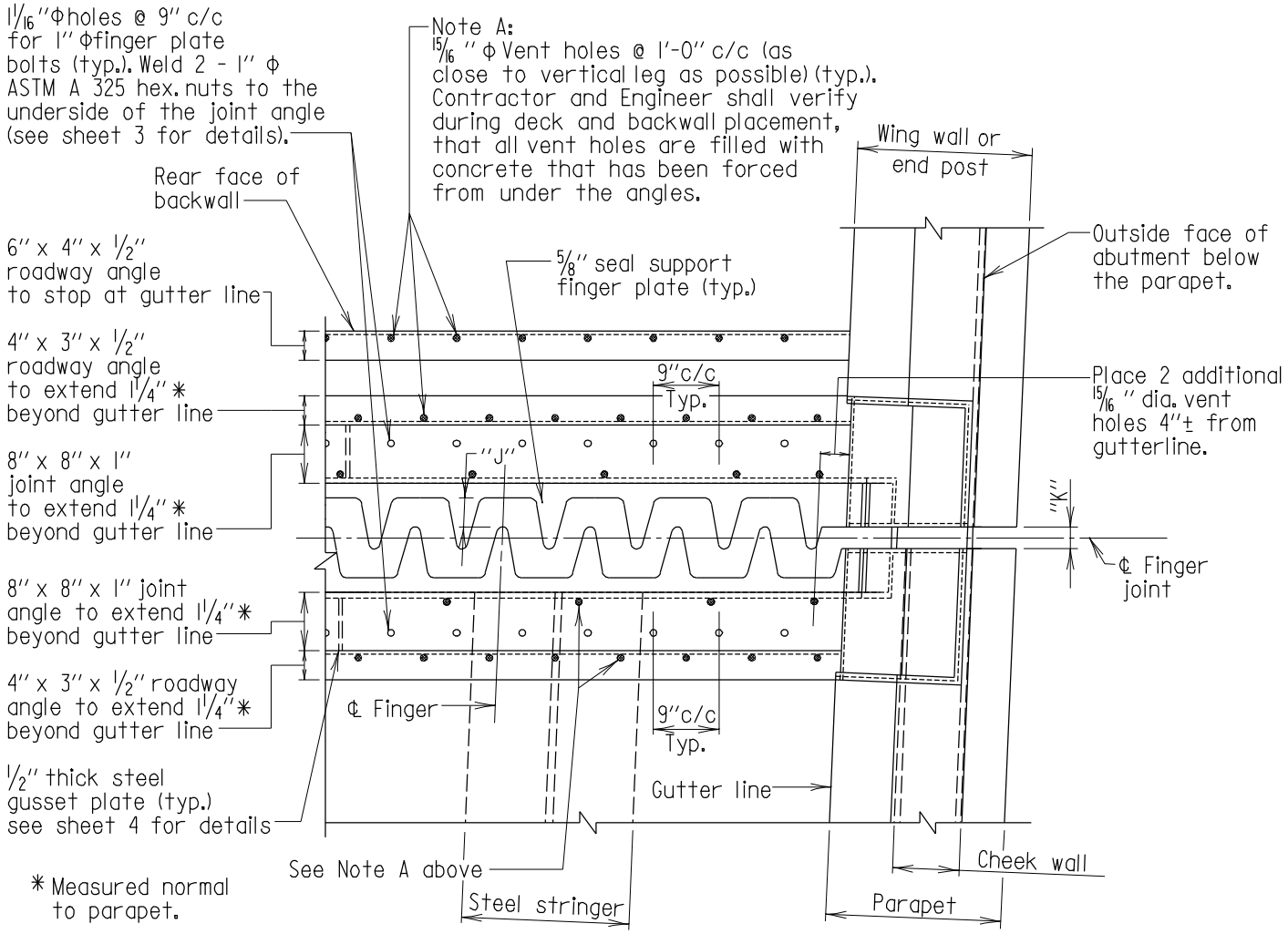

* Measured normal to parapet.

Note:
Anchor studs, anchor straps & conduits not shown for clarity.
℄ finger is parallel to the direction of superstructure movement. Dimension "J" is measured along ℄ finger.

PLAN WITH ROADWAY FINGER PLATES, PARAPET SLIDING PLATE AND FOAM SEAL REMOVED

Scale: 1/2" = 1'-0"

Notes:
1. All details not indicated are the same as Plan at Roadway Level on Sheet No. 1 of 13.
2. For dimensions "J" & "K" see Sheet No. 13 of 13.

APPROVAL	
R.S. Freedman DIRECTOR OFFICE OF BRIDGE DEVEL.	
DATE: 8/19/04	
REVISIONS	
SHA	FHWA
10-17-05	·
7-19-06	·
·	·
·	·

FHWA APPROVAL
DATE:

STATE OF MARYLAND
DEPARTMENT OF TRANSPORTATION
STATE HIGHWAY ADMINISTRATION
OFFICE OF BRIDGE DEVELOPMENT

FINGER JOINT DETAILS (42" F-SHAPE PARAPET)
FOR BRIDGES WITH STEEL STRINGERS
WITH SKEW ANGLES BETWEEN 50° AND 90°

STANDARD NO. BR-SS(7.18)-04-321B

SHEET 2 OF 13

SUPER-ROADWAY JOINTS

1" ϕ ASTM Type 304 A stainless steel hex. head bolt with stainless steel lock washer (typ.)

Joint angle 8" x 8" x 1" (typ.)

Finger plate

4" thick foam seal full length (shown hatched) tight to bottom of finger plates.

15/16" ϕ Vent holes @ 1'-0" c/c (as close to vertical leg as possible) (typ.). Contractor and Engineer shall verify during deck and backwall placement, that all vent holes are filled with concrete that has been forced from under the angles.

Roadway angle 4" x 3" x 1/2" 4" leg horizontal (typ.)

Roadway angle 6" x 4" x 1/2" 4" leg horizontal

1'-9" min.

2 1/2"

1 1/2"

3/4" ϕ threaded rods with opposite threads (one at each girder).

3/4" ϕ x 8" long studs @ 9", stagger @ 4 1/2"

1'-6" **

1 1/2" x 1/2" x 12" strap anchors @ 9" c/c stagger with 3/4" ϕ x 8" studs @ 9" c/c

6"

3/4" ϕ x 8" long studs @ 9" c/c

6"

Typ.

3/4" ϕ sleeve nut

3/4" ϕ x 2" stud

3/8 Typ.

Top flange of steel stringer

8" min. x 4" x 3/4" clip angle

3/4" ϕ bolt

5/8" seal support finger plate

"B"

Abutment backwall

Concrete end diaphragm at abutment

* For gusset plate details see sheet 4.

** This portion of backwall to be placed after the adjacent deck concrete has been placed.

℄ of bearing

2 ASTM A 325 hex. nuts

Typ.

Tack weld after tightening

Bolt length shall allow a min. of 1/2" exposure after tightening

SECTION A-A
TYPICAL SECTION AT STRINGERS
Scale: 3/4" = 1'-0"

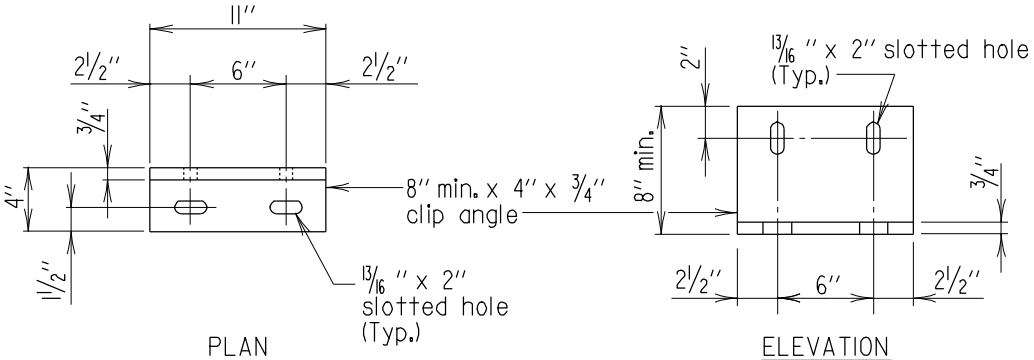

PLAN

ELEVATION

CLIP ANGLE DETAILS
Scale: 1" = 1'-0"

Notes:

1. Finger joint to be fabricated, assembled and shipped to the job site fully assembled.
2. The fully assembled joint shall be installed, bolted and welded into its final position.
3. During concrete deck placement: "CONCRETE MUST APPEAR AT THE TOP OF THE FINGER PLATE INDICATING THAT CONCRETE HAS FILLED THE VOID AREA".
4. For material specifications and requirements, see Special Provisions.
5. For finger plate thickness and dimension "B", see Sheet no. 13 of 13.
6. For details of drainage trough, see Standard No. BR-SS(7.02)-79-64.

APPROVAL	
R S Friedman DIRECTOR OFFICE OF BRIDGE DEVEL. DATE: 8/19/04	
REVISIONS	
SHA	FHWA
10-17-05	·
7-19-06	·
·	·
·	·

FHWA APPROVAL
DATE:

STATE OF MARYLAND
DEPARTMENT OF TRANSPORTATION
STATE HIGHWAY ADMINISTRATION
OFFICE OF BRIDGE DEVELOPMENT

FINGER JOINT DETAILS (42" F-SHAPE PARAPET)
FOR BRIDGES WITH STEEL STRINGERS
WITH SKEW ANGLES BETWEEN 50° AND 90°

STANDARD NO. BR-SS(7.18)-04-321B

SHEET 3 OF 13

SUPER-ROADWAY JOINTS

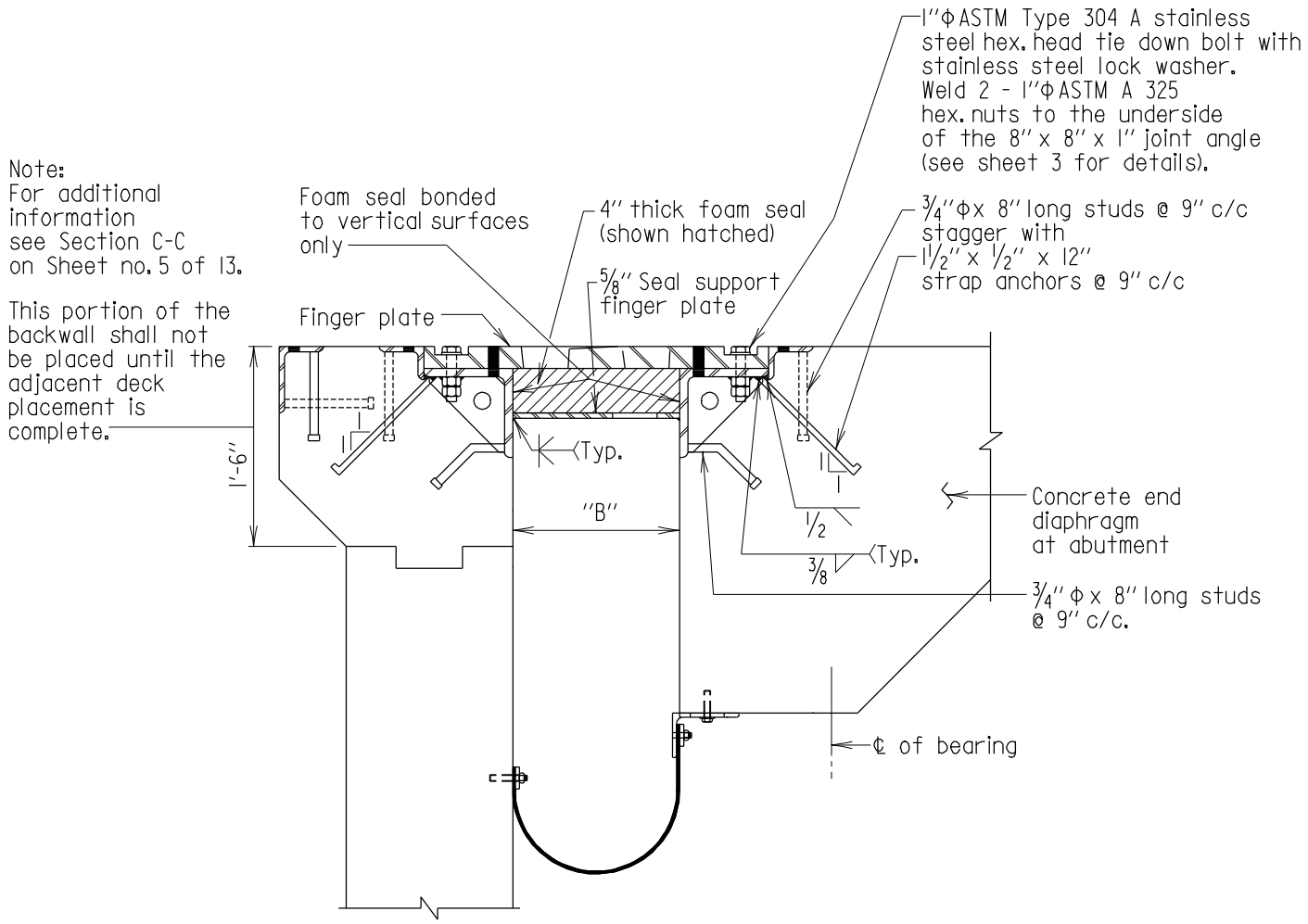

SECTION B-B
TYPICAL SECTION BETWEEN STRINGERS
Scale: 3/4" = 1'-0"

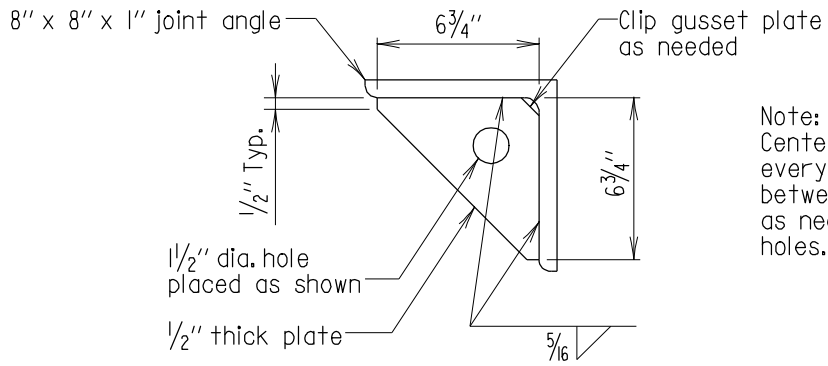

Note:
Center gusset plate between every other tie down bolt between girders. Move plate as necessary to clear vent holes.

GUSSET PLATE DETAILS
Scale: 1 1/2" = 1'-0"

Notes:
1. For finger plate thickness and dimension "B", see Sht. No. 13 of 13.
2. For details of drainage trough, see Standard No. BR-SS(7.02)-79-64.
3. For details not shown see Sheet. no. 3 of 13.

APPROVAL	
E.S. Freedman DIRECTOR CHIEF ENGR. BRIDGE DEVEL. DATE: 8/19/04	
REVISIONS	
SHA	FHWA
10-17-05	·
·	·
·	·
·	·

FHWA APPROVAL
DATE:

STATE OF MARYLAND
DEPARTMENT OF TRANSPORTATION
STATE HIGHWAY ADMINISTRATION
OFFICE OF BRIDGE DEVELOPMENT

FINGER JOINT DETAILS (42" F-SHAPE PARAPET)
FOR BRIDGES WITH STEEL STRINGERS
WITH SKEW ANGLES BETWEEN 50° AND 90°

STANDARD NO. BR-SS(7.18)-04-321B SHEET 4 OF 13

SUPER-ROADWAY JOINTS

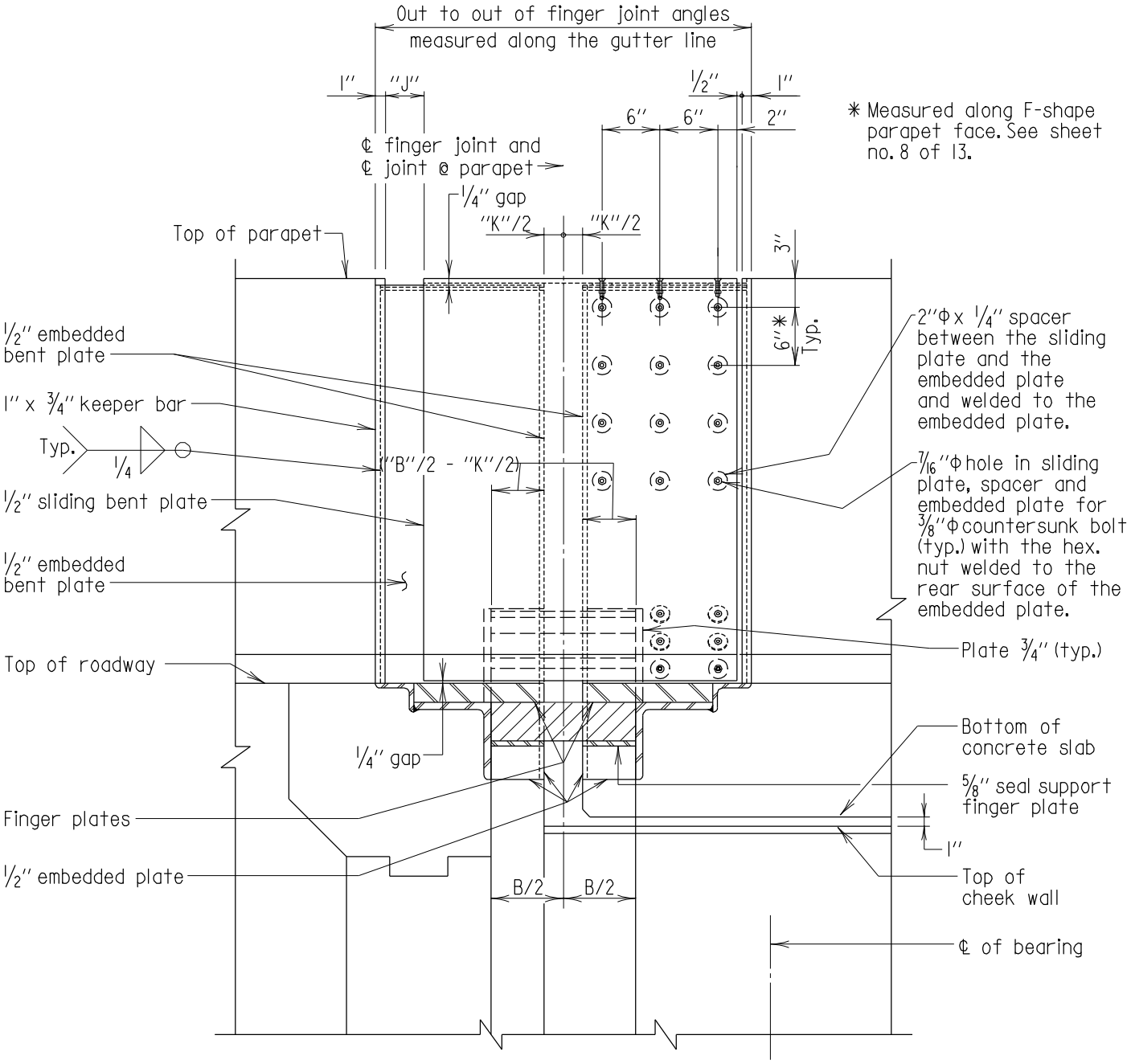

* Measured along F-shape parapet face. See sheet no. 8 of 13.

SECTION C-C

Scale: 3/4" = 1'-0"

Note:
For dimensions "B", "K", & "J" see Sheet No. 13 of 13.

APPROVAL	
E.S. Friedman DIRECTOR OFFICE OF BRIDGE DEVEL.	
DATE: 8/19/04	
REVISIONS	
SHA	FHWA

FHWA APPROVAL
DATE:

STATE OF MARYLAND
DEPARTMENT OF TRANSPORTATION
STATE HIGHWAY ADMINISTRATION
OFFICE OF BRIDGE DEVELOPMENT

FINGER JOINT DETAILS (42" F-SHAPE PARAPET)
FOR BRIDGES WITH STEEL STRINGERS
WITH SKEW ANGLES BETWEEN 50° AND 90°

STANDARD NO. BR-SS(7.18)-04-321B

SHEET 5 OF 13

SUPER-ROADWAY JOINTS

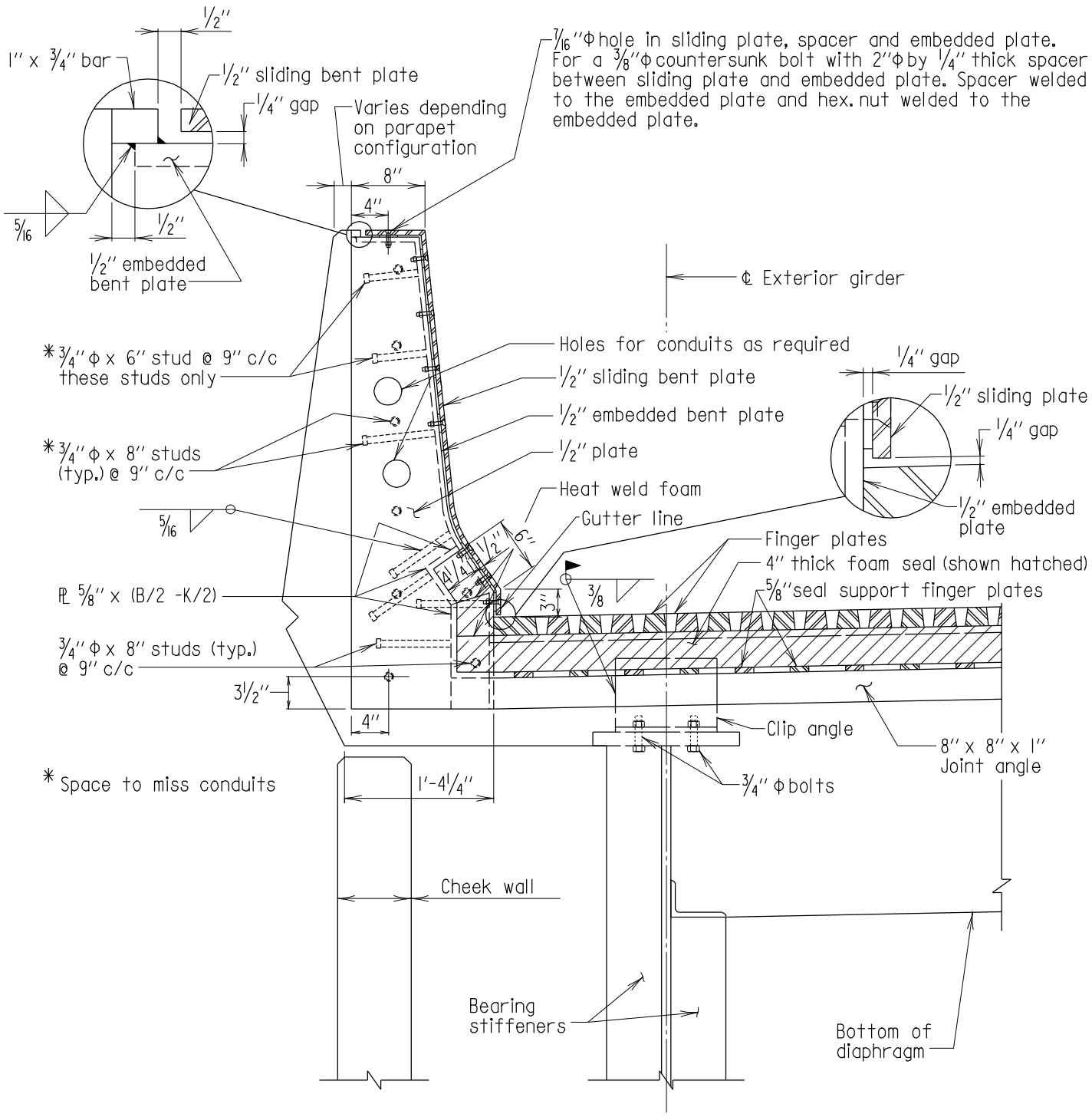

Note:
Drainage trough not shown for clarity.

SECTION D-D

Scale: 3/4" = 1'-0"

Notes:
1. For parapet dimensions see BR-SS(6.25)-84-159B.
2. Diamond back parapet shown, for exact configuration see Typical Section.

APPROVAL	
E.S. Friedman DIRECTOR OFFICE OF BRIDGE DEVEL. DATE: 8/19/04	
REVISIONS	
SHA	FHWA
10-17-05	

FHWA APPROVAL
DATE:

STATE OF MARYLAND
DEPARTMENT OF TRANSPORTATION
STATE HIGHWAY ADMINISTRATION
OFFICE OF BRIDGE DEVELOPMENT

FINGER JOINT DETAILS (42" F-SHAPE PARAPET)
FOR BRIDGES WITH STEEL STRINGERS
WITH SKEW ANGLES BETWEEN 50° AND 90°

STANDARD NO. BR-SS(7.18)-04-321B SHEET 6 OF 13

SUPER-ROADWAY JOINTS

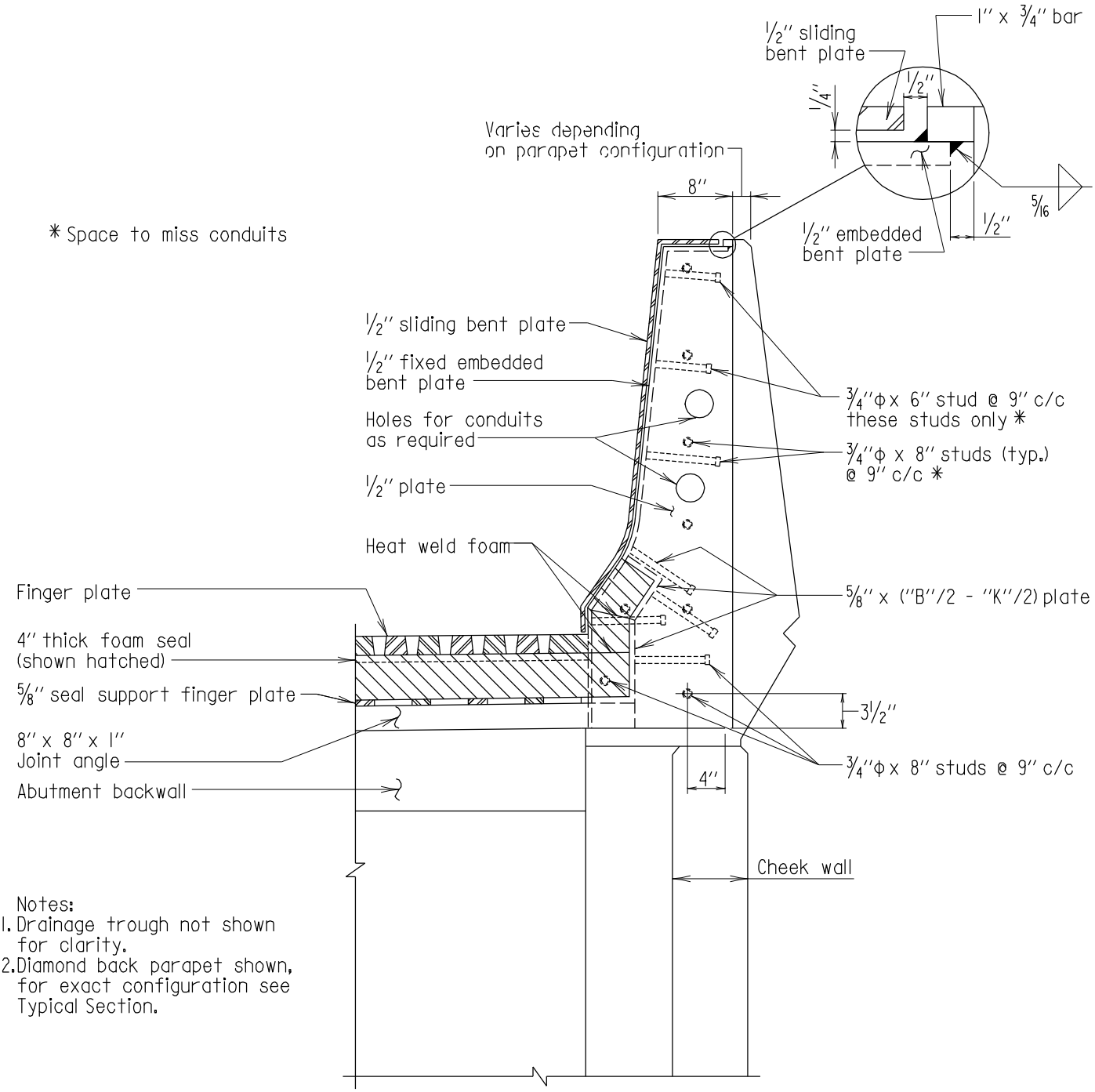

Notes:
1. Drainage trough not shown for clarity.
2. Diamond back parapet shown, for exact configuration see Typical Section.

SECTION E-E

Scale: 3/4" = 1'-0"

APPROVAL		STATE OF MARYLAND DEPARTMENT OF TRANSPORTATION STATE HIGHWAY ADMINISTRATION OFFICE OF BRIDGE DEVELOPMENT
R.S. Freedman DIRECTOR OFFICE OF BRIDGE DEVEL. DATE: 8/19/04		FINGER JOINT DETAILS (42" F-SHAPE PARAPET) FOR BRIDGES WITH STEEL STRINGERS WITH SKEW ANGLES BETWEEN 50° AND 90°
REVISIONS		
SHA	FHWA	
10-17-05	·	
·	·	
·	·	
·	·	

FHWA APPROVAL
DATE: .

STANDARD NO. BR-SS(7.18)-04-321B SHEET 7 OF 13

SUPER-ROADWAY JOINTS

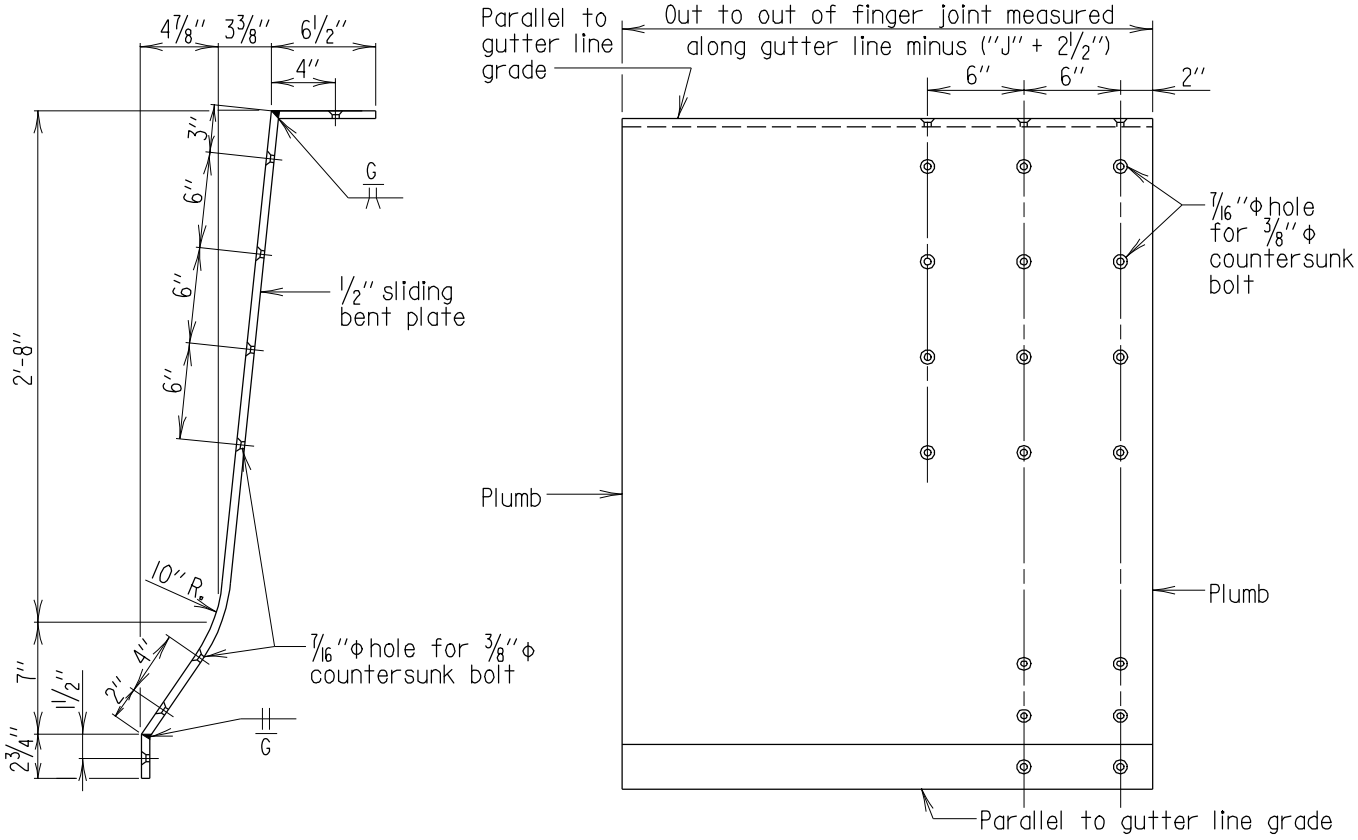

END VIEW

FRONT VIEW

SLIDING PLATE

Scale: 1" = 1'-0"

APPROVAL	
R.S. Freedman DIRECTOR OFFICE OF BRIDGE DEVEL. DATE: 8/19/04	
REVISIONS	
SHA	FHWA
.	.
.	.
.	.
.	.

FHWA APPROVAL
DATE: .

STATE OF MARYLAND
DEPARTMENT OF TRANSPORTATION
STATE HIGHWAY ADMINISTRATION
OFFICE OF BRIDGE DEVELOPMENT

FINGER JOINT DETAILS (42" F-SHAPE PARAPET)
FOR BRIDGES WITH STEEL STRINGERS
WITH SKEW ANGLES BETWEEN 50° AND 90°

STANDARD NO. BR-SS(7.18)-04-321B

SHEET 8 OF 13

SUPER-ROADWAY JOINTS

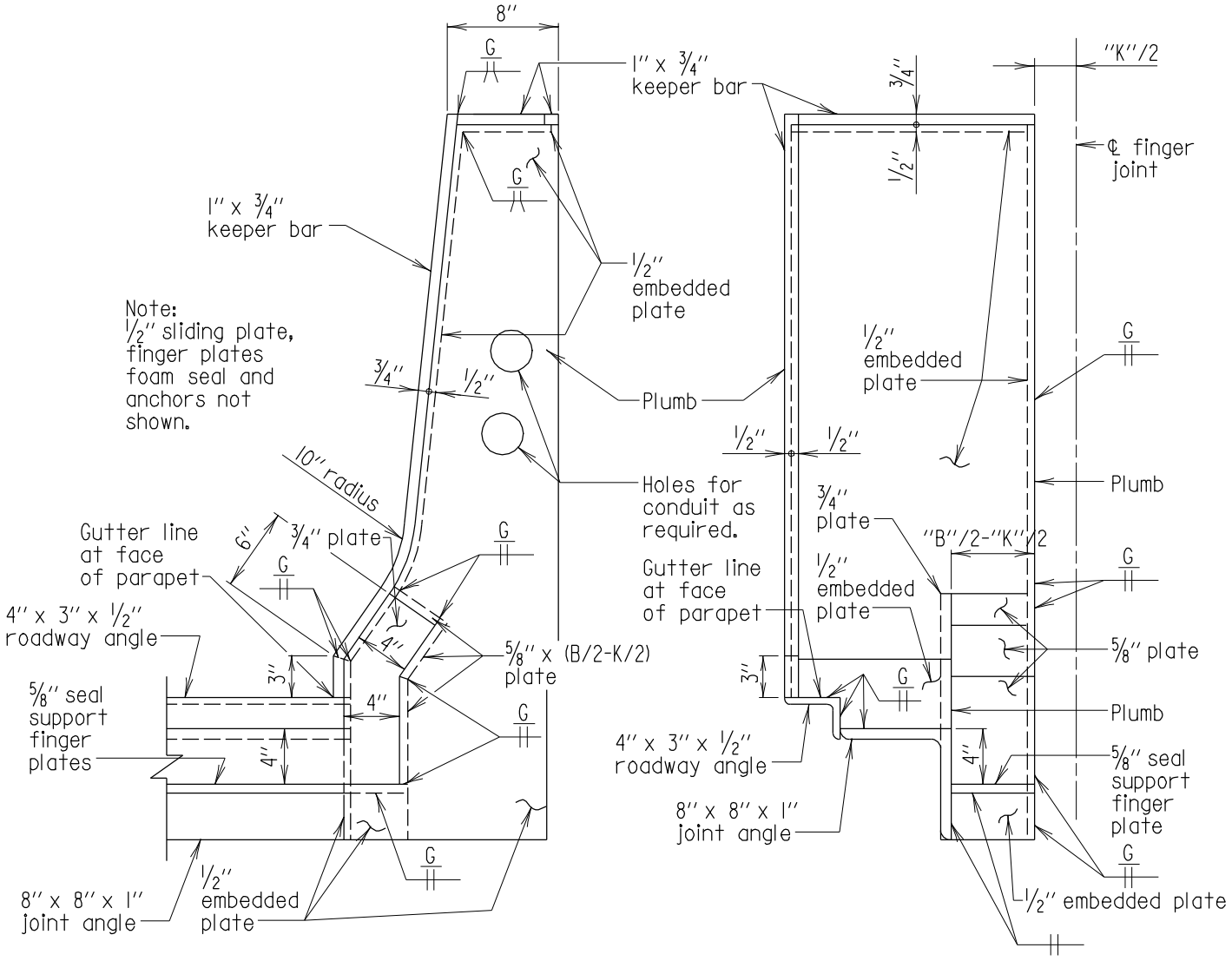

END VIEW FROM ℄ FINGER JOINT

FRONT VIEW

EMBEDDED PLATE - EXPANSION END

Scale: 1'' = 1'-0''

APPROVAL	
R.S. Freedman DIRECTOR OFFICE OF BRIDGE DEVEL.	
DATE: 8/19/04	
REVISIONS	
SHA	FHWA
10-17-05	

FHWA APPROVAL
DATE:

STATE OF MARYLAND
DEPARTMENT OF TRANSPORTATION
STATE HIGHWAY ADMINISTRATION
OFFICE OF BRIDGE DEVELOPMENT

FINGER JOINT DETAILS (42'' F-SHAPE PARAPET)
FOR BRIDGES WITH STEEL STRINGERS
WITH SKEW ANGLES BETWEEN 50° AND 90°

STANDARD NO. BR-SS(7.18)-04-321B

SHEET 9 OF 13

SUPER-ROADWAY JOINTS

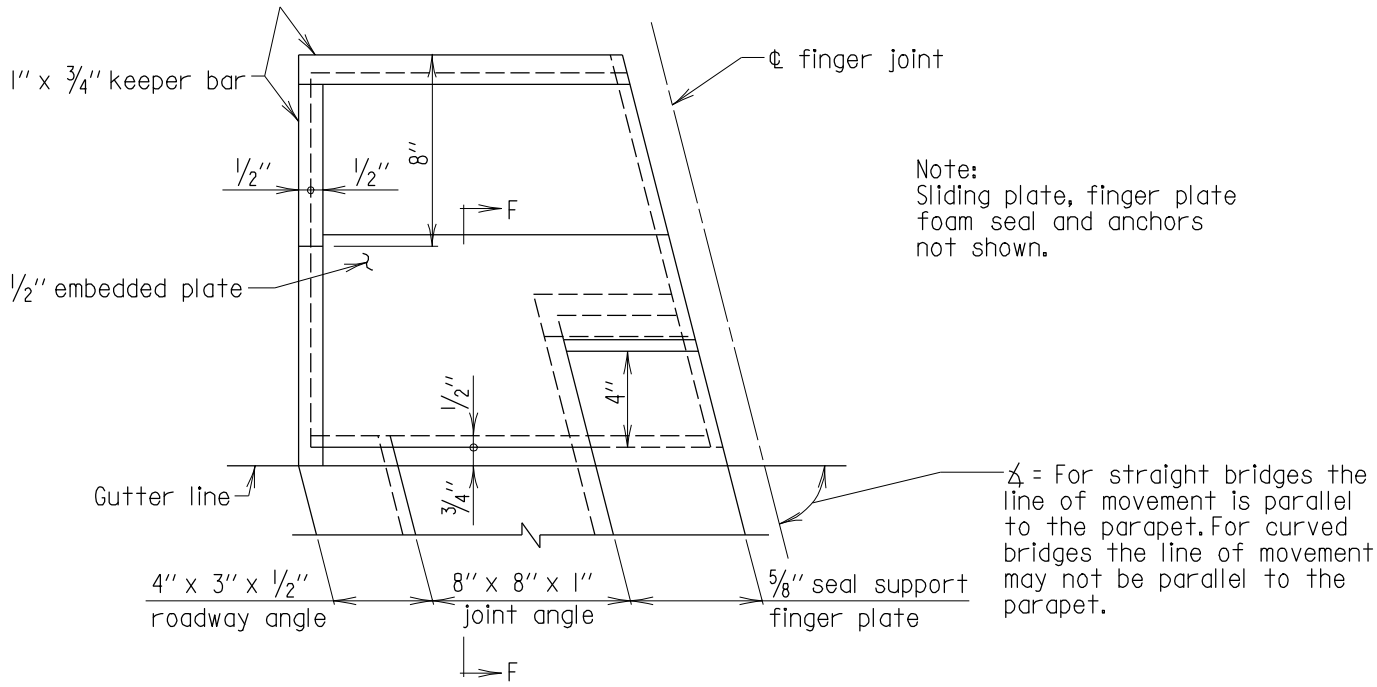

TOP VIEW
EMBEDDED PLATE - EXPANSION END
Scale: 1 1/2" = 1'-0"

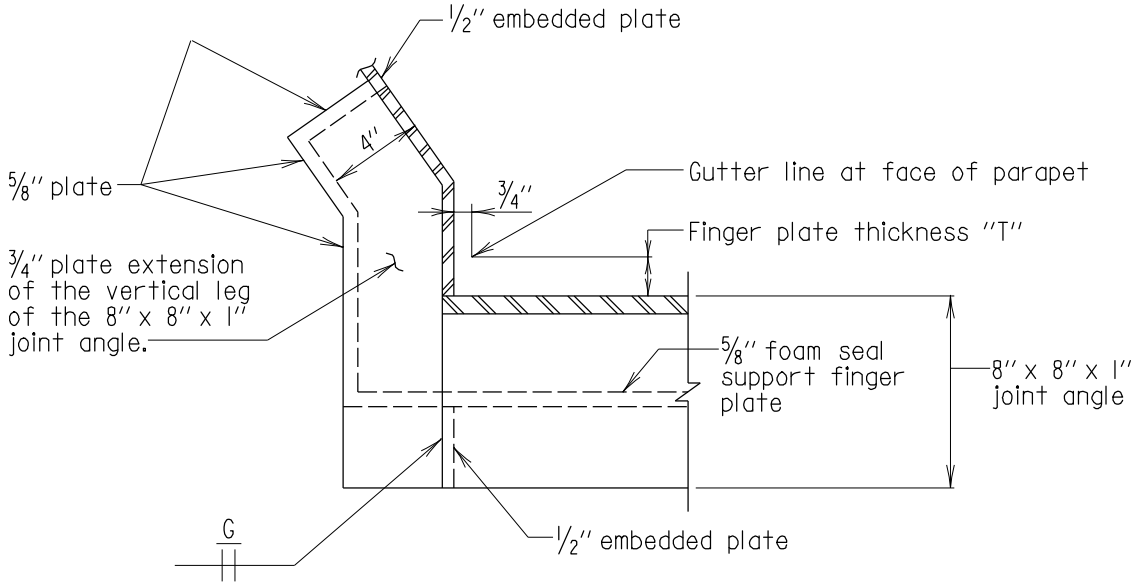

SECTION F-F
Scale: 1 1/2" = 1'-0"

APPROVAL		
C.S. Freedman DIRECTOR OFFICE OF BRIDGE DEVEL. DATE: 8/19/04		
REVISIONS		
SHA	FHWA	
10-17-05	·	
·	·	
·	·	
·	·	

FHWA APPROVAL
DATE:

STATE OF MARYLAND
DEPARTMENT OF TRANSPORTATION
STATE HIGHWAY ADMINISTRATION
OFFICE OF BRIDGE DEVELOPMENT

FINGER JOINT DETAILS (42" F-SHAPE PARAPET)
FOR BRIDGES WITH STEEL STRINGERS
WITH SKEW ANGLES BETWEEN 50° AND 90°

STANDARD NO. BR-SS(7.18)-04-321B

SHEET 10 OF 13

SUPER-ROADWAY JOINTS

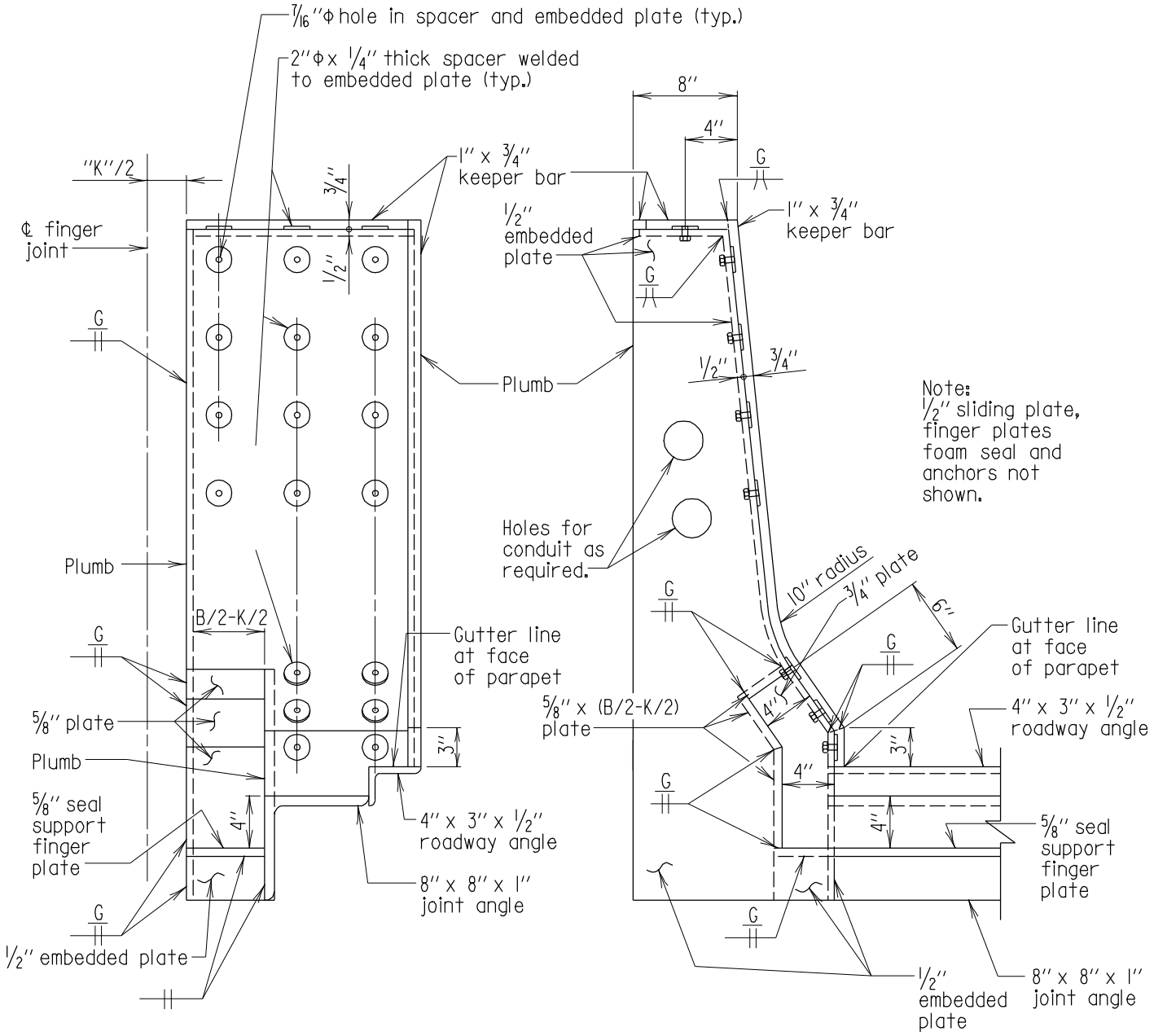

FRONT VIEW

END VIEW FROM ℄ FINGER JOINT

EMBEDDED PLATE - FIXED END

Scale: 1" = 1'-0"

APPROVAL	
R. S. Freedman DIRECTOR OFFICE OF BRIDGE DEVEL.	
DATE: 8/19/04	
REVISIONS	
SHA	FHWA
10-17-05	·
·	·
·	·
·	·

FHWA APPROVAL	
DATE:	

STATE OF MARYLAND
DEPARTMENT OF TRANSPORTATION
STATE HIGHWAY ADMINISTRATION
OFFICE OF BRIDGE DEVELOPMENT

FINGER JOINT DETAILS (42" F-SHAPE PARAPET)
FOR BRIDGES WITH STEEL STRINGERS
WITH SKEW ANGLES BETWEEN 50° AND 90°

STANDARD NO. BR-SS(7.18)-04-321B

SHEET 11 OF 13

SUPER-ROADWAY JOINTS

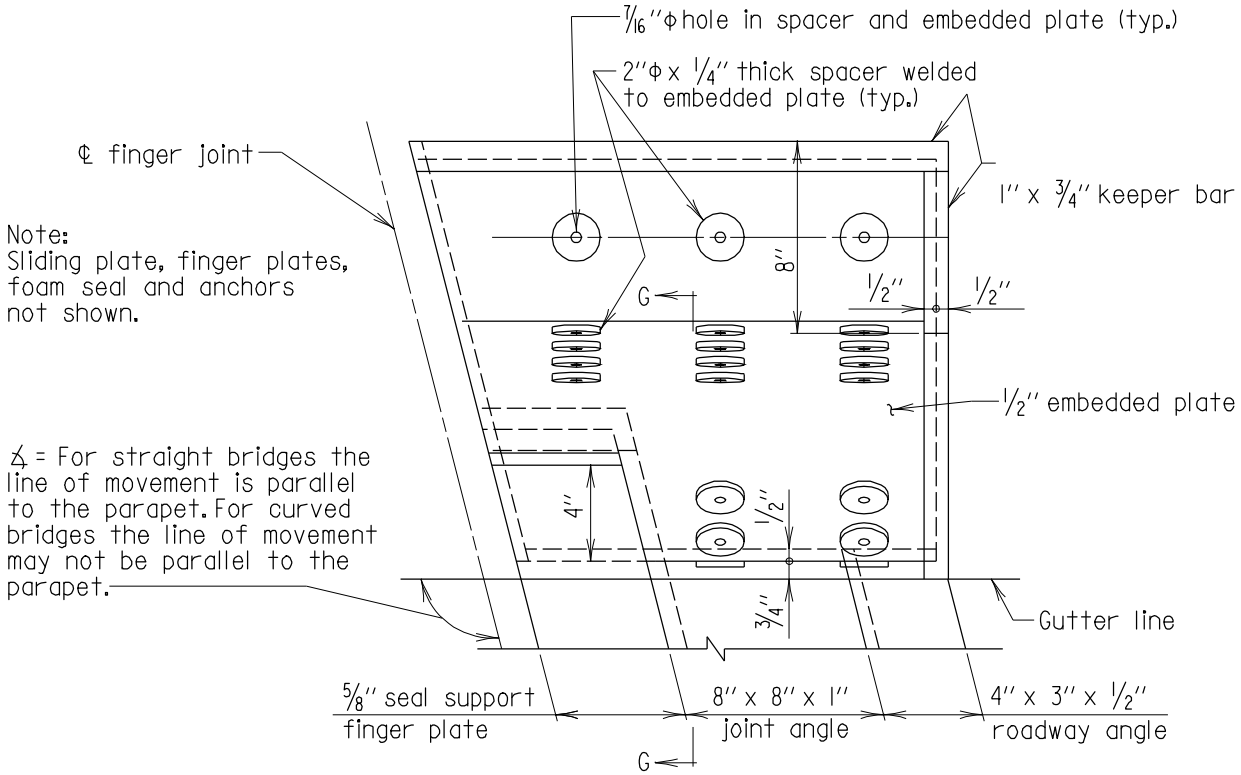

TOP VIEW
EMBEDDED PLATE - FIXED END
Scale: 1 1/2" = 1'-0"

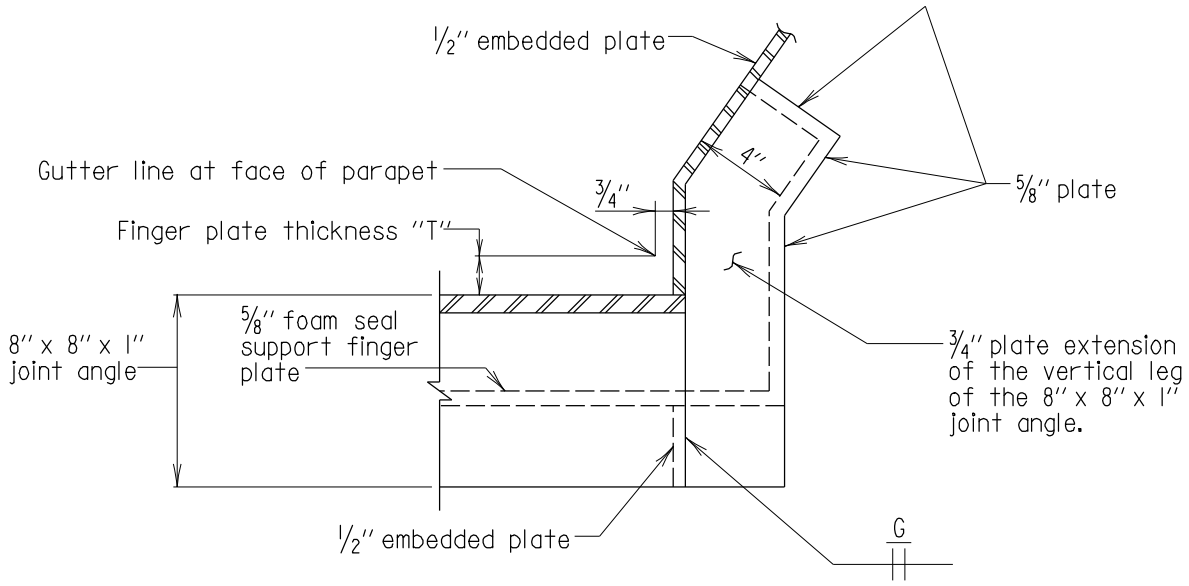

SECTION G-G
Scale: 1 1/2" = 1'-0"

APPROVAL		
R.S. Friedman DIRECTOR OFFICE OF BRIDGE DEVEL. DATE: 8/19/04		
REVISIONS		
SHA	FHWA	
10-17-05	·	
·	·	
·	·	
·	·	

FHWA APPROVAL
DATE:

STATE OF MARYLAND
DEPARTMENT OF TRANSPORTATION
STATE HIGHWAY ADMINISTRATION
OFFICE OF BRIDGE DEVELOPMENT

FINGER JOINT DETAILS (42" F-SHAPE PARAPET)
FOR BRIDGES WITH STEEL STRINGERS
WITH SKEW ANGLES BETWEEN 50° AND 90°

STANDARD NO. BR-SS(7.18)-04-321B

SHEET 12 OF 13

SUPER-ROADWAY JOINTS

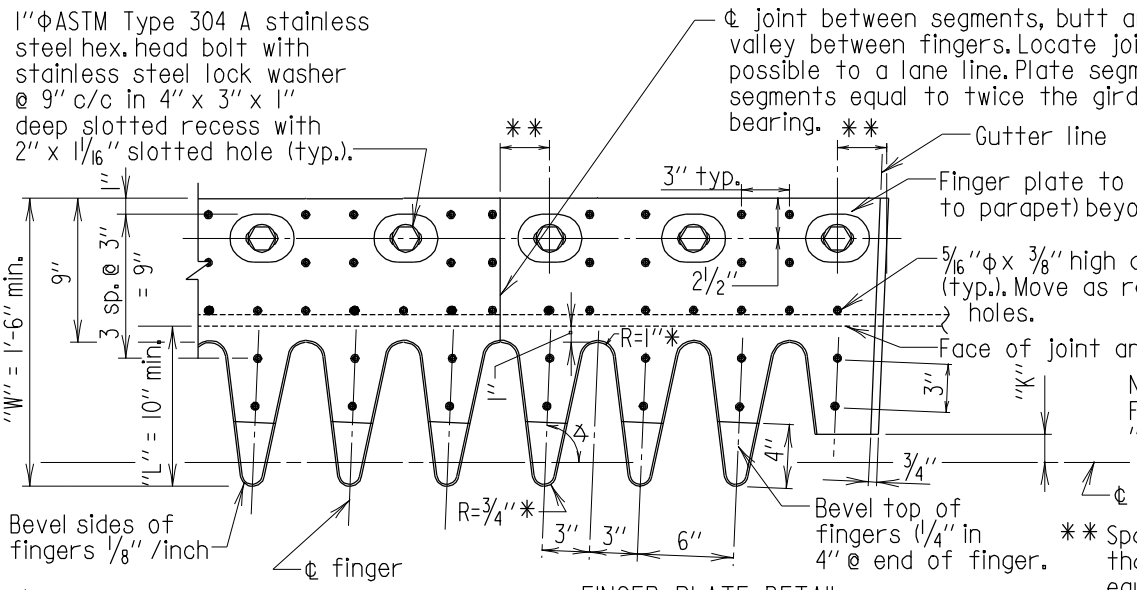

FINGER PLATE DETAIL

Scale: 1" = 1'-0"

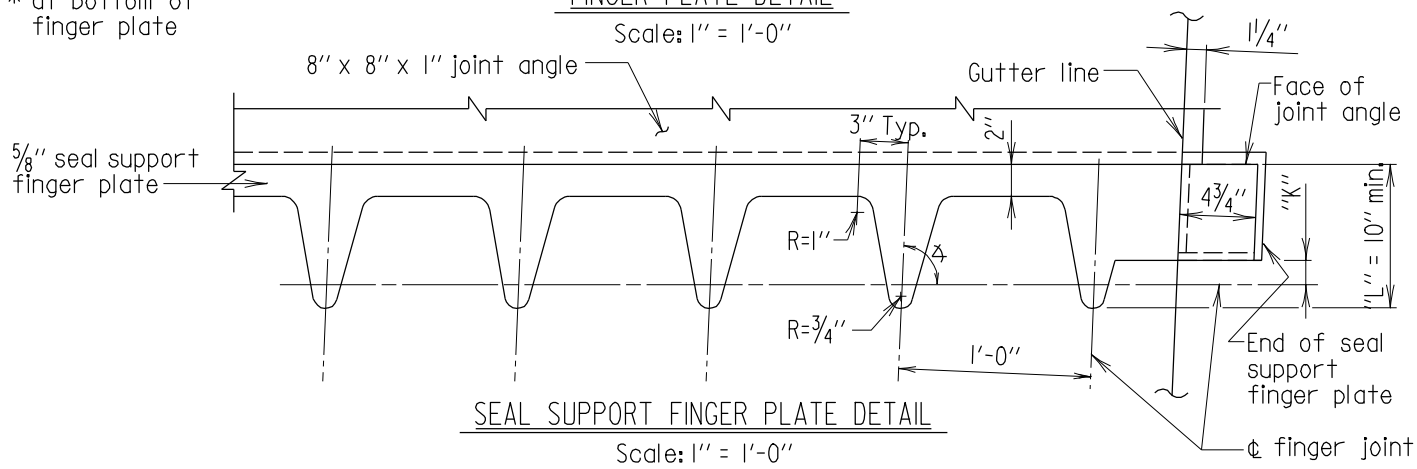

SEAL SUPPORT FINGER PLATE DETAIL

Scale: 1" = 1'-0"

JOINT OPENING TABLE (INCHES)							
LOCATION OF JOINT		JOINT OPENING AT					
		40° F.	50° F.	60° F.	70° F.	80° F.	90° F.
	J	·	·	·	·	·	·
	K	·	·	·	·	·	·
	B	·	·	·	·	·	·

"J" = Finger plate opening along ℄ of finger (See Sheet No. 1 of 13)

"K" = Finger plate opening normal to ℄ of joint (See Sheet No. 1 of 13)

"B" = Joint opening between joint angles normal to ℄ of joint (See Sheet No. 3 of 13)

"∡" = Skew Angle of straight bridges, angle along which the bridge expands, and contracts for curved bridges.

"T" = _____

"L" = _____

"W" = _____

"∡" = _____

APPROVAL	
R. S. Friedman DIRECTOR OFFICE OF BRIDGE DEVEL.	
DATE: 8/19/04	
REVISIONS	
SHA	FHWA
10-17-05	·
·	·
·	·
·	·

FHWA APPROVAL
DATE:

STATE OF MARYLAND
DEPARTMENT OF TRANSPORTATION
STATE HIGHWAY ADMINISTRATION
OFFICE OF BRIDGE DEVELOPMENT

FINGER JOINT DETAILS (42" F-SHAPE PARAPET)
FOR BRIDGES WITH STEEL STRINGERS
WITH SKEW ANGLES BETWEEN 50° AND 90°

STANDARD NO. BR-SS(7.18)-04-321B

SHEET 13 OF 13

SUPER-ROADWAY JOINTS