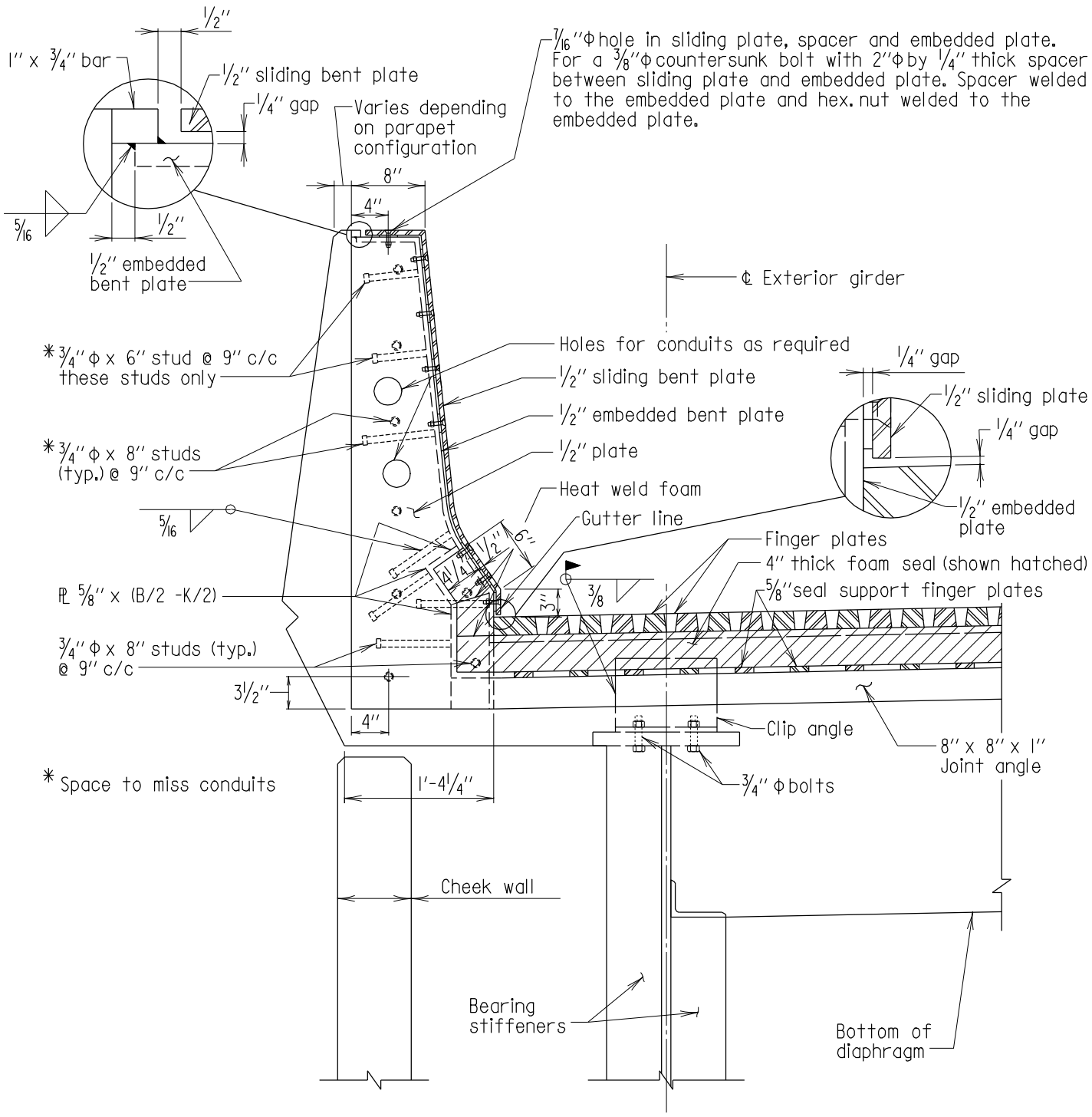

Note:
Drainage trough not shown for clarity.

SECTION D-D

Scale: 3/4" = 1'-0"

Notes:
1. For parapet dimensions see BR-SS(6.25)-84-159B.
2. Diamond back parapet shown, for exact configuration see Typical Section.

APPROVAL	
E.S. Friedman DIRECTOR OFFICE OF BRIDGE DEVEL. DATE: 8/19/04	
REVISIONS	
SHA	FHWA
10-17-05	

FHWA APPROVAL
DATE:

STATE OF MARYLAND
DEPARTMENT OF TRANSPORTATION
STATE HIGHWAY ADMINISTRATION
OFFICE OF BRIDGE DEVELOPMENT

FINGER JOINT DETAILS (42" F-SHAPE PARAPET)
FOR BRIDGES WITH STEEL STRINGERS
WITH SKEW ANGLES BETWEEN 50° AND 90°

STANDARD NO. BR-SS(7.18)-04-321B SHEET 6 OF 13

SUPER-ROADWAY JOINTS