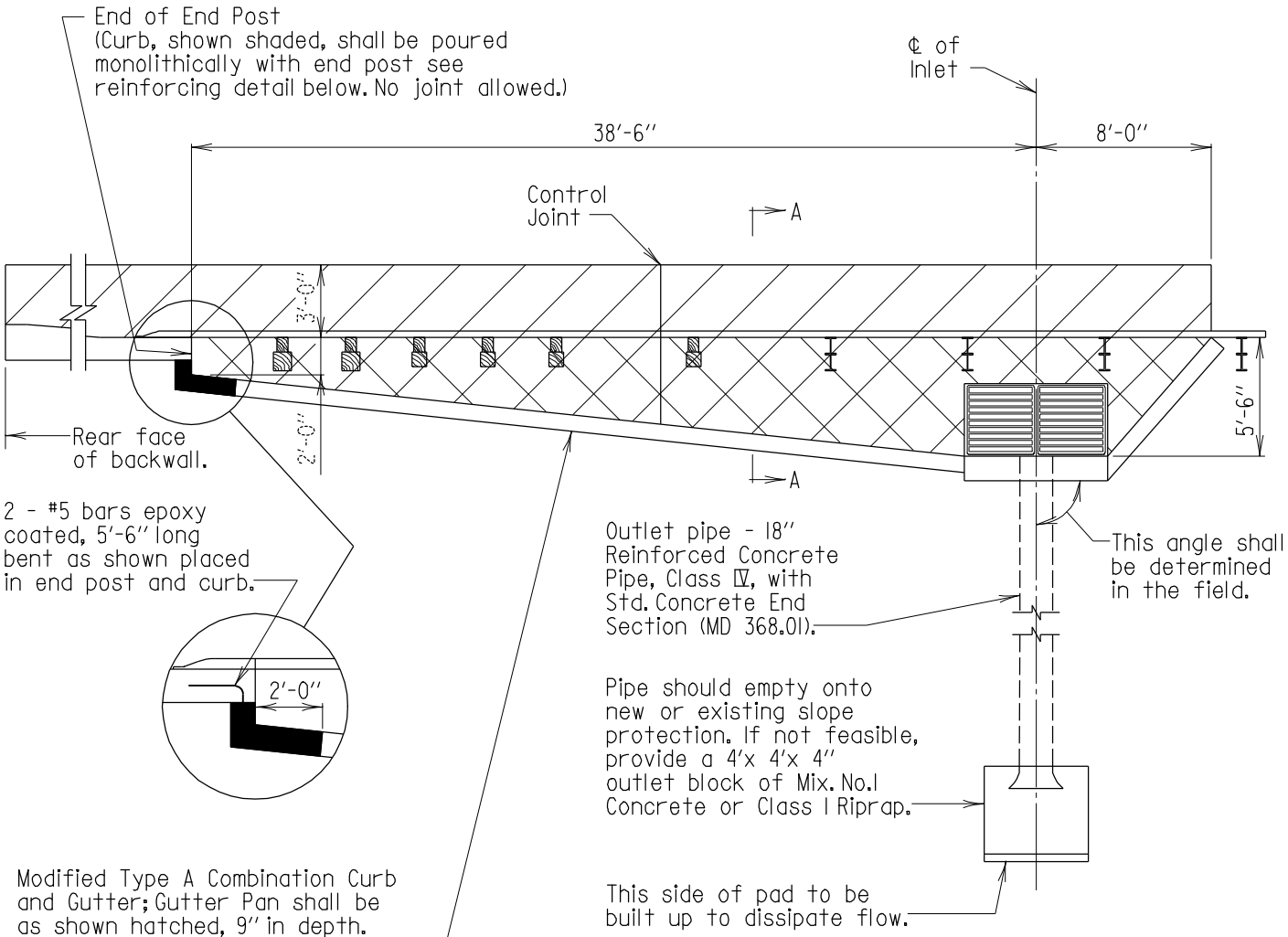


PLAN OF INLET AREA

Scale: 1/8" = 1'-0"

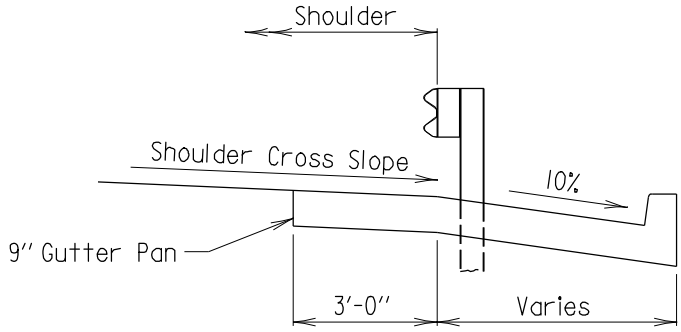


SECTION A-A

Scale: 1/4" = 1'-0"

| APPROVAL | | |
|---|---|---|
| E.S. Freedman DEPUTY CHIEF ENGR. BRIDGE DEVEL. DATE: 10/22/90 | | |
| REVISIONS | | |
| SHA | FHWA | |
| 1-7-97 | · | |
| 2-11-00 | · | |
| 1-30-07 | · | |
| · | · | |

| FHWA APPROVAL |
|---|
| DATE: |

STATE OF MARYLAND
DEPARTMENT OF TRANSPORTATION
STATE HIGHWAY ADMINISTRATION
OFFICE OF BRIDGE DEVELOPMENT

DRAINAGE INLET
AT END OF BRIDGE STRUCTURE
(OPEN APPROACH ROADWAY)

STANDARD NO. M(0.03)-80-123

SHEET 2 OF 2

MISCELLANEOUS